FFT FLEX-FLOAT TECHNOLOGY®

MacDon®

FD2 Series FlexDraper® Header with FM200 Float Module

Parts Catalog

262612 Revision A

Original Instruction

Featuring MacDon FLEX-FLOAT Technology®

The Harvesting Specialists.

FD2 Series FlexDraper® Header with FM200 Float Module

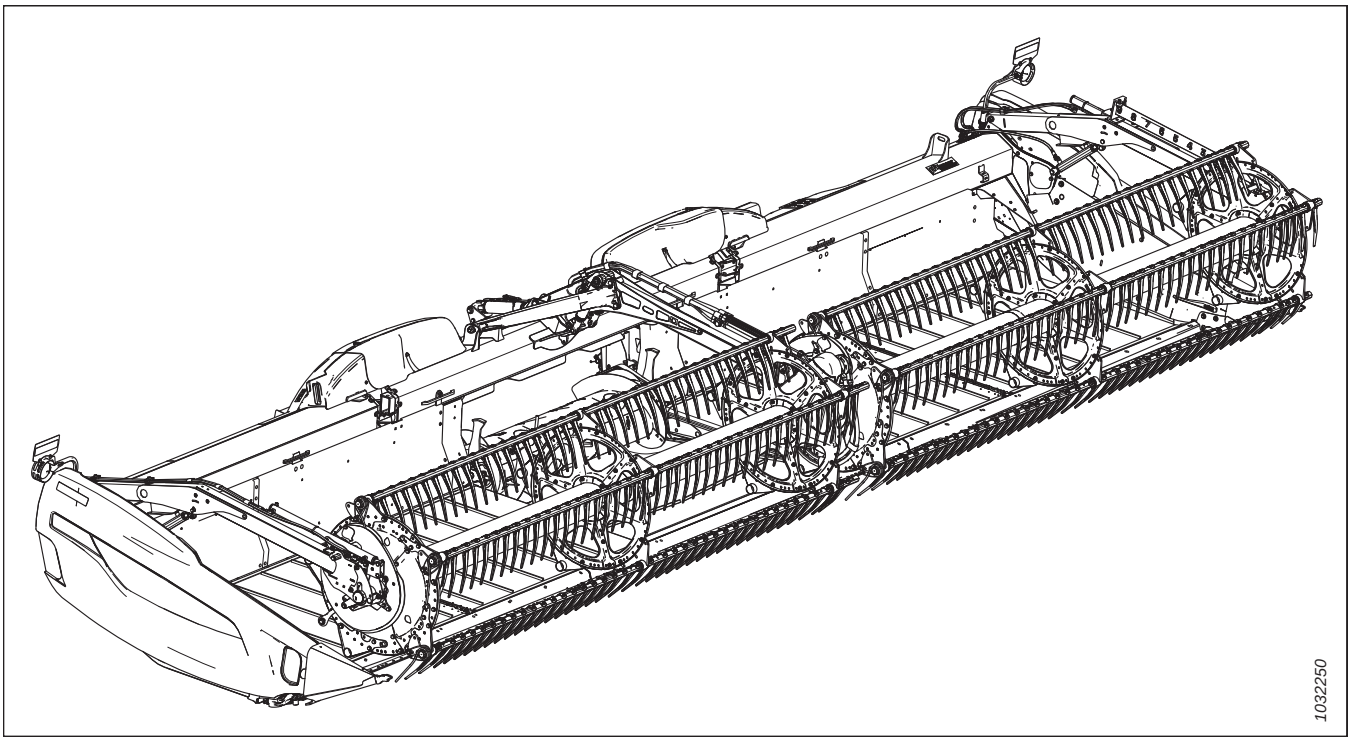

Published: March 2024

NOTE:

Keep your MacDon publications up-to-date. The most current English version can be downloaded from our website (*www.macdon.com*) or from our Dealer-only site (*https://portal.macdon.com*) (login required).

Czech, French, German, Portuguese, Russian, and Spanish translations of this manual can be ordered from MacDon, downloaded from the MacDon Dealer Portal (*https://portal.macdon.com*) (login required), or downloaded from the MacDon website (*http://www.macdon.com*).

© 2024 MacDon Industries, Ltd.

The information in this publication is based on the information available and in effect at the time of printing. MacDon Industries, Ltd. makes no representation or warranty of any kind, whether expressed or implied, with respect to the information in this publication. MacDon Industries, Ltd. reserves the right to make changes at any time without notice.

Introduction

This Parts Catalog lists all the replacement parts that can be ordered for a MacDon FD2 Series FlexDraper® Combine Header (Section *1 Header Frame Components, page 1* to *156 (Option) VertiBlade™ Vertical Knife Components, page 385*) and a FM200 Float Module (Section *157 Frame Components – Float Module, page 389* to *235 (Option) Stripper Bars, page 595*).

When ordering, be sure the complete and proper part number is given. Some parts vary with header size; be sure you are ordering the correct part number for your unit.

Bold text is used to indicate updates made at the current revision level. With each new revision of the catalog, previous revisions are returned to regular text.

Electrical connectors used on MacDon products are available for sale but not listed in this catalog. For the list of available connectors, refer to the Electrical Connectors Parts Catalog (MD #169641).

In this catalog, right and left are determined from the operator's seated position in the combine. An arrow is sometimes used in illustrations to indicate forward position.

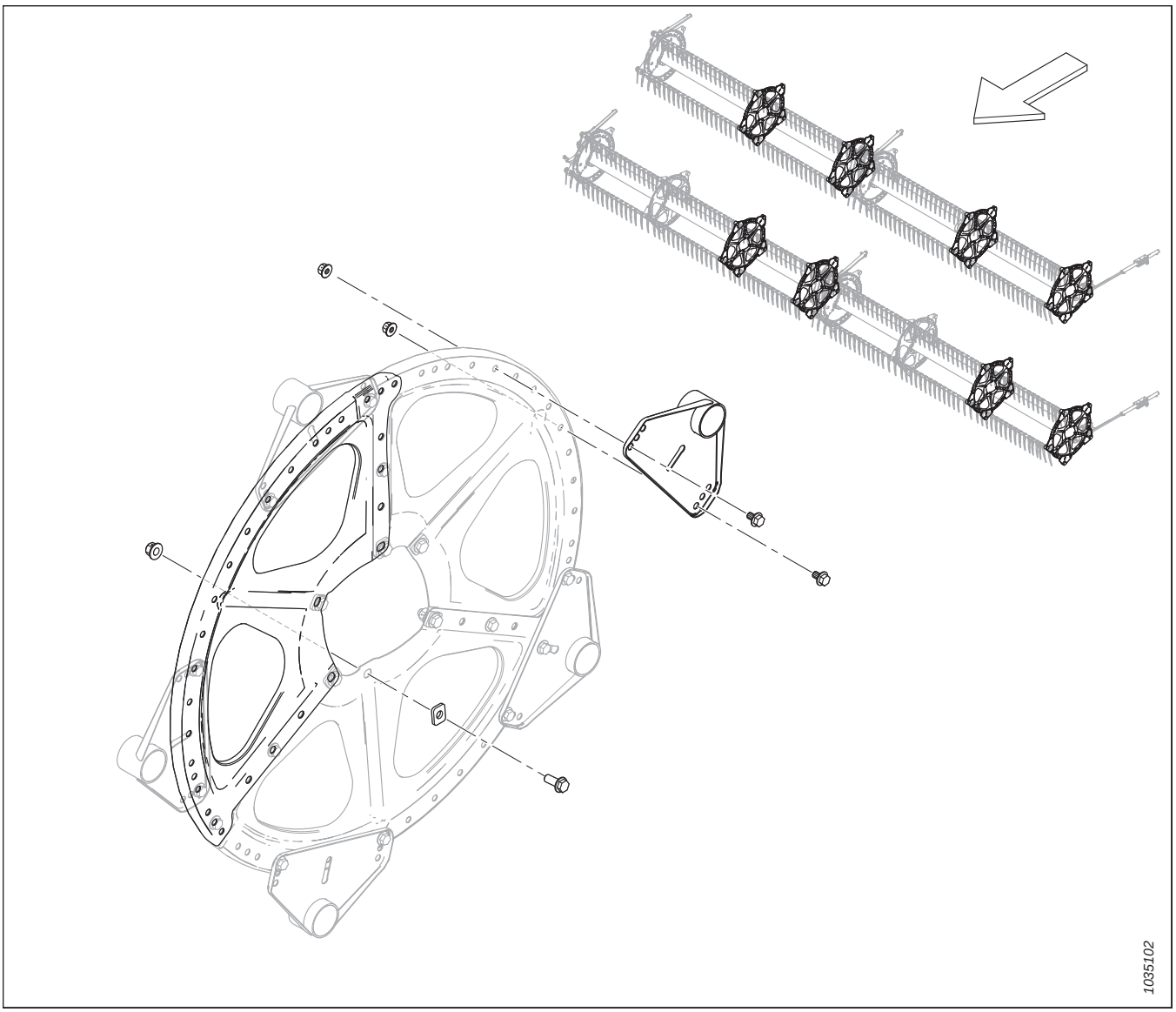

Abbreviations

A/R – as required (quantity varies)	ASSY – assembly	BHRN – button head rib neck
BV – ball valve	CCW – counterclockwise	CON – conical (spring washer)
CSK – countersink	C/W – complete with	CW – clockwise
DBLE – double	DK – double knife	DR – double reel
DT – distorted thread	FLG – flange	GA – gauge
GR – grade	GS – grass seed	HD – head
HDR – header	HFA – hydraulic fore-aft	HH – hex head
HNBR – hydrogenated nitrile butadiene rubber	HYD – hydraulic	I.D. – inside diameter
IP – internal plus (torx plus)	KP – knife pressure	KR – knife return
LG – long	LH – left hand (determined from Operator's position, facing forward)	LK – lock
MACH – machine	MD – MacDon	MFA – manual fore-aft
MY – model year	NC – national coarse thread	NF – national fine thread
NSS – not sold separately	NT – narrow transport	O.D. – outside diameter
OPT – optional	PO – pilot operated	PT – pull-type (mower conditioner)
RC – roller chain	REF – reference, part number called up elsewhere in catalog	REG – regular
RH – right hand (determined from Operator's position, facing forward)	RHSN – round head, square neck or square neck carriage bolt	RHSSN – round head, short, square neck
RTD – rotating tine drum	SAE – Society of Automotive Engineers (part produced to comply with)	SD – side draper
SER – serrated	SK – single knife	SKT HD – socket head
SMTH – smooth	SMV – slow moving vehicle	SOCK – socket
SP – self-propelled (windrower) header	SPCL – special	SPH – spherical
SPI – serrations per inch (knife Sections)	SR – single reel	STL – steel (stainless)
STR – standard	STVR – Stover	TFL – thread full length
THD – thread	TR – triple reel	UCA – upper cross auger
UDK – untimed double knife	UNC – unified coarse thread	UNEF – unified extra fine thread
UNF – unified fine thread	UNS – unified special thread series	VK – veritcal knife
WF – wide frame	ZP – zinc plated	

Serial Number Breaks

The side of the serial number on which the dash (–) appears determines whether the part is used "up to" or "after" the serial number given.

Example:

- –451189 Used on machines up to and including serial number 451189
- 451190– Used on machines including and after serial number 451190

Summary of Changes – FD2 Series and FM200 (MD #262612 Rev. A)

This list covers changes made since the last revision (MD #262230 Rev. C).

Section	Summary of Change	Internal Use Only
2 Header Frame End Panels, page 3	Added end panels 360748 and 360749, and knife opening covers 360750 and 360751 for model year 2024 and later headers. Added footnotes and serial number breaks for clarity.	ECN 64181 Engineering
24 Draper Deflectors – Narrow, page 49	Added narrow deflectors 360520, 360521, 360754, and 360755 for model year 2024 and later headers. Added footnotes and serial number breaks for clarity.	ECN 64181 Engineering
29 Flex Linkage Shield – Triple Reel (FD245 and FD250), page 63	Reversed callouts 13 and 14 to properly reference triple-reel shield braces 319548 and 319549. Updated illustration from 1039360 to 1044260 to show changes.	Publications
117 (Option) Brace Tube Kits, page 279	Added new topic with new illustration 1044048.	ECN 64591
157 Frame Components – Float Module, page 389	Superseded LH cover 314928 with LH cover 378133.	ECN 65040
	Added plug fitting 158174 and added a footnote for clarity. Updated illustration from 1041780 to 1043889 to show changes.	ECN 65226
158 Pump, Gearbox, and Input Drive (Integrated Hydraulic System), page 391	Revised topic title.	ECN 65226
159 Pump Assembly (Integrated Hydraulic System), page 393	Revised topic title.	ECN 65226
160 Integrated Pump – Service Parts (Integrated Hydraulic System), page 395	Revised topic title.	ECN 65226
161 Pump, Gearbox, and Input Drive (Modular Hydraulic System), page 399	Added new topic with new illustration 1043910.	ECN 65226 ECN 65301 ECN 65332
162 Pump Assembly (Modular Hydraulic System), page 401	Added new topic with new illustration 1043923.	ECN 65226 ECN 65259 ECN 65307 ECN 65332
163 Gearbox Brace (Modular Hydraulic System), page 405	Added new topic with new illustration 1043929.	ECN 65226 ECN 65301 ECN 65307 ECN 65332
164 Gearbox Assembly, page 407	Added main drive gearbox 368761 for float modules with a modular hydraulic system, added footnotes throughout for clarity.	ECN 65226
186 Hydraulics – Center-Link and Header Tilt / Reel Fore-Aft, page 467	Replaced edge trim seal 254183 quantity of 1 with “A/R” and added a footnote for clarity. The seal is not required for units with newer float module frames.	ECN 65358
187 Hydraulics – Feed Deck (Integrated Hydraulic System), page 471	Revised topic title.	ECN 65226
188 Hydraulics – Suction and Return (Integrated Hydraulic System), page 473	Revised topic title.	ECN 65226
	Added plug fitting 158174 and added a footnote for clarity. Updated illustration from 1032505 to 1044277 to show changes.	ECN 65358

Section	Summary of Change	Internal Use Only
189 Hydraulics – Feed Deck (Modular Hydraulic System), page 475	Added new topic with new illustration 1043993.	ECN 65226 ECN 65332
190 Hydraulics – Suction and Return (Modular Hydraulic System), page 479	Added new topic with new illustration 1043989.	ECN 65226 ECN 65332
191 Hydraulics – Drives and Float Module Manifold (Modular Hydraulic System), page 481	Added new topic with new illustration 1044000.	ECN 65226 ECN 65259 ECN 65332
192 Hydraulics – Drive Manifold Assembly, Service Parts (Modular Hydraulic System), page 485	Added new topic with new illustration 1044011.	ECN 65259 ECN 65332
193 Hydraulics – Double Reel, Float Module to Header Manifold (Integrated Hydraulic System), page 487	Revised topic title.	ECN 65226
194 Hydraulics – Triple Reel, Float Module to Header Manifold (Integrated Hydraulic System), page 489	Revised topic title.	ECN 65226
195 Hydraulics – Double Reel, Float Module to Header Manifold (Modular Hydraulic System), page 491	Added new topic with new illustration 1043944.	ECN 65226
196 Hydraulics – Triple Reel, Float Module to Header Manifold (Modular Hydraulic System), page 493	Added new topic with new illustration 1043945.	ECN 65226
197 Electrical – Base (Integrated Hydraulic System), page 495	Revised topic title.	ECN 65259
198 Electrical – Base (Modular Hydraulic System), page 497	Added new topic with new illustration 1044016.	ECN 65259 ECN 65307 ECN 65332
206 Case IH – Float Module Completion, page 521	Superseded bundle B7043 with B7476. Superseded CNH transition frame assembly 347300 with 357567. Superseded anchor mount support 357678 with 284976. Added support 357606, adjustment plate 284971, and hardware. Updated illustration 1034925 to 1043626 to show changes.	ECN 63619 ECN 64609 ECN 64872
207 Case IH – Hydraulic/ Electrical Completion, page 523	Replaced integration harness 368376 with integrated electrical completion kit 284946, added a footnote for clarity.	ECN 64459
	Replaced hardware 134602 and 134603 with 134010 and 134011 in integrated electrical completion kit 284946; updated footnote to reflect changes.	ECN 65360
	Added transistor plug 349362. Updated illustration from 1041693 to 1043611 to show changes.	ECN 64689

Section	Summary of Change	Internal Use Only
218 John Deere X9 Series – Float Module Completion, page 555	Superseded John Deere X9 Transition Frame kit B7287 with B7533. Superseded transition frame 347376 with transition frame 368660. Replaced anchor plate 357089 with adjustment plates 368656 and 368826. Replaced hardware 184657, 135903, and 184669 with 136506, 135900, and 152730. Updated illustration from 1038671 to 1042361 to show changes.	ECN 64613
221 New Holland CR/CX – Float Module Completion, page 563	Superseded bundle B7043 with B7476. Superseded CNH transition frame assembly 347300 with 357567. Superseded anchor mount support 357678 with 284976. Added support 357606, adjustment plate 284971, and hardware. Updated illustration from 1034928 to 1044022 show changes.	ECN 63619 ECN 64609 ECN 64872
222 New Holland CR/CX – Hydraulic/Electrical Completion, page 565	Replaced integration harness 368376 with integrated electrical completion kit 284946, added a footnote for clarity.	ECN 64459
	Replaced hardware 134602 and 134603 with 134010 and 134011 in integrated electrical completion kit 284946; updated footnote to reflect changes.	ECN 65360
	Added transistor plug 349362. Updated illustration from 1041705 to 1044023 show changes.	ECN 64689

Introduction i
Abbreviations ii
Serial Number Breaks iii
Summary of Changes – FD2 Series and FM200 (MD #262612 Rev. A) iv

1 Header Frame Components 1
2 Header Frame End Panels 3
3 Header Frame – Split Frame Hardware 5
4 Manual Case, Retaining Pin, and Knife Storage 7
5 Transition Pan 9
6 Divider Cones 11
7 Divider Rods and Storage 13
8 Endshields – MacDon 15
9 Endshields – Case 17
10 Endshields – New Holland 19
11 Endshield Mount Components 21
12 Draper 25
13 Draper – Backsheet Panels (FD225) 27
14 Draper – Backsheet Panels (FD230, FD235, FD240, and FD241) 29
15 Draper – Backsheet Panels (FD245 and FD250) 31
16 Draper – Tensioner 33
17 Draper – Drive Roller 35
18 Draper – Decks and Tracks (FD225) 37
19 Draper – Decks and Tracks (FD230, FD235, FD240, and FD241) 39
20 Draper – Decks and Tracks (FD245 and FD250) 41
21 Draper – Seals (FD225) 43
22 Draper – Seals (FD230, FD235, and FD240) 45
23 Draper – Seals (FD241, FD245, and FD250) 47
24 Draper Deflectors – Narrow 49
25 Balance Linkage 51
26 Flex Linkage Shield – Backtube Hinge 57
27 Flex Linkage Shield – Single Reel (FD225) and Double Reel (FD230, FD235, FD240, and FD241) 59
28 Flex Linkage Shield – Triple Reel (FD240) 61
29 Flex Linkage Shield – Triple Reel (FD245 and FD250) 63
30 Guards, Hold-Downs, and Cutterbar Shoes – Single Knife, Pointed (FD225, FD230, FD235, and FD240) 65
31 Guards, Hold-Downs, and Cutterbar Shoes – Double Knife, Pointed (FD235, FD240, FD241, FD245, and FD250) 67
32 Guards, Hold-Downs, and Cutterbar Shoes – Single Knife, PlugFree™ (FD225, FD230, FD235, and FD240) 69
33 Guards, Hold-Downs, and Cutterbar Shoes – Double Knife, PlugFree™ (FD240, FD241, FD245, and FD250) 71
34 Knives – Single-Knife Headers (FD225) 73
35 Knives – Single-Knife Headers (FD230, FD235, and FD240) 75
36 Knives – Double-Knife Headers (FD235 and FD240) 79
37 Knives – Double-Knife Headers (FD241) 85
38 Knives – Double-Knife Headers (FD245) 89
39 Knives – Double-Knife Headers (FD250) 93

40 Knife Drive – Single and Double Knife 97
41 Knife Drive Box 99
42 Reel Support Arm and Lift Cylinders – Center Arm (FD230, FD235, FD240, and FD241) 101
43 Reel Support Arm and Lift Cylinders – Center Arm, Right Side (FD240, FD245, and FD250) 103
44 Reel Support Arm and Lift Cylinders – Center Arm, Left Side (FD240, FD245, and FD250) 105
45 Reel Support Arm and Lift Cylinders – Outer Arms, Single Reel 107
46 Reel Support Arm and Lift Cylinders – Outer Arms, Double and Triple Reel 109
47 Reel Arm Components – Right Arm, Single Reel (FD225) 111
48 Reel Arm Components – Right Arm, Double Reel (FD230, FD235, FD240, and FD241) 113
49 Reel Arm Components – Right Arm, Triple Reel (FD240, FD245, and FD250) 115
50 Reel Arm Components – Center Arm (FD230, FD235, FD240, FD241, FD245, and FD250) 117
51 Reel Arm Components – Center Right Arm, Triple Reel (FD240, FD245, and FD250) 119
52 Reel Arm Components – Left Arm (FD225, FD230, FD235, FD240, FD241, FD245, and FD250) 121
53 Reel – Drive, Right Arm, Single Reel 123
54 Reel – Drive, Center Arm, Double and Triple Reel 127
55 Reel – Cam Components, Right Arm 131
56 Reel – Cam Components, Center Right Arm, Triple Reel (FD240, FD245, and FD250) 133
57 Reel – Tine Tube 135
58 Reel Discs – Cam End and Linkage (FD225, FD230, FD235, FD240, FD241, FD245, and FD250) 139
59 Reel Discs – Mid Span, Cam Side (FD225, FD235, FD240, FD241, FD245, and FD250) 141
60 Reel Discs – Mid Span, Tail Side (FD225, FD230, FD235, FD240, FD241, FD245, and FD250) 143
61 Reel Discs – Tail End (FD225, FD230, FD235, FD240, FD241, FD245, and FD250) 145
62 Reel – Center Tubes, Single Reel 147
63 Reel – Center Tubes, Double Reel 149
64 Reel – Center Tubes, Triple Reel 151
65 Reel – Endshields, Cam End, Inboard 153
66 Reel – Endshields, Cam End, Outboard 155
67 Reel – Endshields, Tail End, Inboard 157
68 Reel – Endshields, Tail End, Outboard 159
69 Skid Shoes – End and Center 161
70 Hydraulics – Manifold Fittings and Fasteners 163
71 Hydraulics – Manifold Plugs 165
72 Hydraulics – Knife Drive, Single and Double Knife, Left Side (FD225, FD230, FD235, FD240, FD241, and FD245) 167
73 Hydraulics – Knife Drive, Double Knife, Left Side (FD250) 171
74 Hydraulics – Knife Drive, Double Knife, Right Side (FD235, FD240, and FD241) 173
75 Hydraulics – Knife Drive, Double Knife, Right Side (FD245 and FD250) 177
76 Hydraulics – Draper Drive (FD225, FD230, FD235, FD240, and FD241) 181
77 Hydraulics – Draper Drive (FD245 and FD250) 183
78 Hydraulics – Lift and Fore-Aft, Single Reel, Left Arm (FD225) 185
79 Hydraulics – Lift and Fore-Aft, Single Reel, Right Arm (FD225) 187
80 Hydraulics – Lift and Fore-Aft, Double Reel, Left Arm (FD230, FD235, FD240, and FD241) 189
81 Hydraulics – Lift and Fore-Aft, Double Reel, Center Arm (FD230, FD235, FD240, and FD241) 193

82 Hydraulics – Lift and Fore-Aft, Double Reel, Right Arm (FD230 and FD235) 195
83 Hydraulics – Lift and Fore-Aft, Double Reel, Right Arm (FD240 and FD241) 197
84 Hydraulics – Lift and Fore-Aft, Triple Reel, Left Arm (FD240, FD245, and FD250) 201
85 Hydraulics – Lift and Fore-Aft, Triple Reel, Center Arm, Left Side (FD240, FD245, and FD250) 203
86 Hydraulics – Lift and Fore-Aft, Triple Reel, Center Arm, Right Side (FD240, FD245, and FD250) 205
87 Hydraulics – Lift and Fore-Aft, Triple Reel, Right Arm (FD240, FD245, and FD250) 207
88 Hydraulics – Upper Cross Auger 211
89 Hydraulics – Reel Drive, Single Reel 215
90 Hydraulics – Reel Drive, Double and Triple Reel 217
91 Hydraulics – ContourMax™, Contour Wheels (FD225 and FD230) 219
92 Hydraulics – ContourMax™, Contour Wheels (FD235) 223
93 Hydraulics – ContourMax™, Contour Wheels (FD240, FD241, FD245, and FD250) 225
94 Hydraulics – VertiBlade™ Vertical Knife (FD225, FD230, FD235, FD241, and FD245) 229
95 Hydraulics – VertiBlade™ Vertical Knife (FD250) 233
96 Hydraulic Line Covers (FD225) 235
97 Hydraulic Line Covers (FD230, FD235, and FD240) 237
98 Hydraulic Line Covers (FD241, FD245, and FD250) 239
99 Electrical – Harness (FD225) 241
100 Electrical – Harness (FD230, FD235, FD240, FD241, FD245, and FD250) 243
101 Electrical – Clearance Lights 245
102 Electrical – Reel Height Sensor 247
103 Electrical – Reel Fore-Aft Sensor (2023 and Prior) 249
104 Electrical – Reel Fore-Aft Sensor (2024 and Later) 251
105 Electrical – Reel Speed Sensor, AGCO and CLAAS 253
106 Electrical – Reel Speed Sensor, John Deere 255
107 Electrical – Reel Speed Sensor, Rostselmash 257
108 Decals and Reflectors – FD2 Series 259
109 Decals – Product Identification 261
110 Decals – Product Identification, Case 263
111 Decals – Product Identification, New Holland 267
112 Decals – French 269
113 Decals – Portuguese 271
114 Decals – Russian 273
115 Decals – Spanish 275
116 Paint 277
117 (Option) Brace Tube Kits 279
118 (Option) ContourMax™ – Outer Contour Wheels 281
119 (Option) ContourMax™ – Inner Contour Wheels 285
120 (Option) ContourMax™ – Gauge Service Kit 289
121 (Option) ContourMax™ – Height Sensing – Case, New Holland, and John Deere X9 Series 291
122 (Option) Crop Lifters and Storage Rack 295
123 (Option) Divider Storage Bracket 297
124 (Option) EasyMove™ – Slow Speed Transport, Base Kit and Stabilizer Wheels 299

125 (Option) EasyMove™ – Slow Speed Transport, Wheels, Tires, and Tow Poles 305
126 (Option) Endshield Conversion Kits 309
127 (Option) Flex Linkage Stop Repair 311
128 (Option) Floating Crop Dividers 313
129 (Option) Four-Point Guard Kits, Single Knife 317
130 (Option) Four-Point Guard Kits, Double Knife 319
131 (Option) Header Tilt Foot Switch 321
132 (Option) High Wear Skid Shoes 323
133 (Option) Lodged Crop Reel Fingers 325
134 (Option) Reel Tine Tube Conversion Kits – Double Reel, 5 Bat to 6 Bat 327
135 (Option) Reel Tine Tube Conversion Kits – Double Reel, 6 Bat to 9 Bat 331
136 (Option) Reel – Two Speed 335
137 (Option) Rice Divider Rods 337
138 (Option) Rock Retarder Kit 339
139 (Option) Service Kit – Pointed Guards, Coarse Knives 341
140 (Option) Service Kit – PlugFree™ Guards, Coarse Knives 343
141 (Option) Service Kit Plus – Single Knife 345
142 (Option) Service Kit Plus – Double Knife 347
143 (Option) Side Hill Stabilizer Kit 349
144 (Option) Stabilizer Wheels 351
145 (Option) Steel Finger Kit 355
146 (Option) Steel Reel End Finger Kits 357
147 (Option) Stubble Lights 359
148 (Option) Sunflower Attachment – Base Kit – Lean Bar and Deflectors 361
149 (Option) Sunflower Attachment – Base Kit – Pans and Supports 365
150 (Option) Sunflower Attachment – Deflector Kits (Double Reel) 367
151 (Option) Sunflower Attachment – Deflector Kits (Triple Reel) 369
152 (Option) Sunflower Attachment – Pans 371
153 (Option) Upper Cross Auger – Two-Piece Auger (FD225, FD230, FD235, and FD241) 373
154 (Option) Upper Cross Auger – Three-Piece Auger (FD240, FD245, and FD250) 377
155 (Option) VertiBlade™ Vertical Knife Kit 381
156 (Option) VertiBlade™ Vertical Knife Components 385
157 Frame Components – Float Module 389
158 Pump, Gearbox, and Input Drive (Integrated Hydraulic System) 391
159 Pump Assembly (Integrated Hydraulic System) 393
160 Integrated Pump – Service Parts (Integrated Hydraulic System) 395
161 Pump, Gearbox, and Input Drive (Modular Hydraulic System) 399
162 Pump Assembly (Modular Hydraulic System) 401
163 Gearbox Brace (Modular Hydraulic System) 405
164 Gearbox Assembly 407
165 Input Drive Assembly 411
166 Input Driveline and Support 415
167 Input Driveline and Support – High Angle 417

168 Input Driveline Conversion Kits 421
169 Auger Drum and Internal Components 423
170 Auger Assembly – Right Arm 425
171 Auger Assembly – Left Arm 429
172 Auger – Float Linkage 433
173 Auger Completion 435
174 Auger Conversion Kits – Fingers and Flighting 437
175 Auger – Crop Deflector Kits 439
176 Auger – Grease Lines 441
177 Float Linkage and Float Setting and Measuring 443
178 Float Lock Pivot Rework Kit 447
179 Float Springs 449
180 Float Module Attaching and Filler Components – FM200 to FD2 Series (2021 and Prior) 451
181 Float Module Attaching and Filler Components – FM200 to FD2 Series (2022 and Later) 455
182 Feed Deck – Frame, Pivot Pins, and Front Support 457
183 Feed Deck – Draper 459
184 Feed Deck – Drive/Idler Roller and Tensioner 461
185 Feed Deck – Pans and Fillers 465
186 Hydraulics – Center-Link and Header Tilt / Reel Fore-Aft 467
187 Hydraulics – Feed Deck (Integrated Hydraulic System) 471
188 Hydraulics – Suction and Return (Integrated Hydraulic System) 473
189 Hydraulics – Feed Deck (Modular Hydraulic System) 475
190 Hydraulics – Suction and Return (Modular Hydraulic System) 479
191 Hydraulics – Drives and Float Module Manifold (Modular Hydraulic System) 481
192 Hydraulics – Drive Manifold Assembly, Service Parts (Modular Hydraulic System) 485
193 Hydraulics – Double Reel, Float Module to Header Manifold (Integrated Hydraulic System) 487
194 Hydraulics – Triple Reel, Float Module to Header Manifold (Integrated Hydraulic System) 489
195 Hydraulics – Double Reel, Float Module to Header Manifold (Modular Hydraulic System) 491
196 Hydraulics – Triple Reel, Float Module to Header Manifold (Modular Hydraulic System) 493
197 Electrical – Base (Integrated Hydraulic System) 495
198 Electrical – Base (Modular Hydraulic System) 497
199 Electrical – FM200 to Combine Cab 499
200 Decals and Reflectors – FM200 505
201 Challenger®, Massey Ferguson®, and Gleaner® – Float Module Completion 507
202 Challenger®, Massey Ferguson®, and Gleaner® – Hydraulic/Electrical Completion 509
203 IDEAL™ Series – Float Module Completion 513
204 IDEAL™ Series – Hydraulic/Electrical Completion 515
205 Challenger®, Massey Ferguson®, and IDEAL™ Series – Auger Completion 519
206 Case IH – Float Module Completion 521
207 Case IH – Hydraulic/Electrical Completion 523
208 Case IH 2300/2500 Series – Float Module Completion 527
209 Case IH 2300/2500 Series – Hydraulic/Electrical Completion 529
210 CLAAS – Float Module Completion 531

211 CLAAS – Hydraulic/Electrical Completion (2022 and Prior) 533
212 CLAAS – Hydraulic Completion (2023 and Later) 537
213 CLAAS – Electrical Completion (2023 and Later) 541
214 CLAAS – Auger Completion 545
215 John Deere S Series – Float Module Completion 547
216 John Deere S and T Series – Hydraulic/Electrical Completion 549
217 John Deere T Series – Float Module Completion 553
218 John Deere X9 Series – Float Module Completion 555
219 John Deere X9 Series – Hydraulic Completion 557
220 John Deere X9 Series – Electrical Completion 561
221 New Holland CR/CX – Float Module Completion 563
222 New Holland CR/CX – Hydraulic/Electrical Completion 565
223 New Holland CR/CX – Auger Completion 569
224 New Holland CR/CX – Flighting Completion 571
225 New Holland CR/CX – Deflector Completion 573
226 New Holland 10 Volt Auto Header Height Control Adapter Kit 575
227 Rostselmash – Float Module Completion 577
228 Rostselmash – Hydraulic/Electrical Completion 579
229 (Option) Auger Flighting Kits 583
230 (Option) FM200 Full Interface Filler – FD2 Series 585
231 (Option) FM200 Fillers and Links 587
232 (Option) Hillside Extension 589
233 (Option) Integration Kit – CLAAS 591
234 (Option) Module Programming Kit 593
235 (Option) Stripper Bars 595
Index 598

1 Header Frame Components

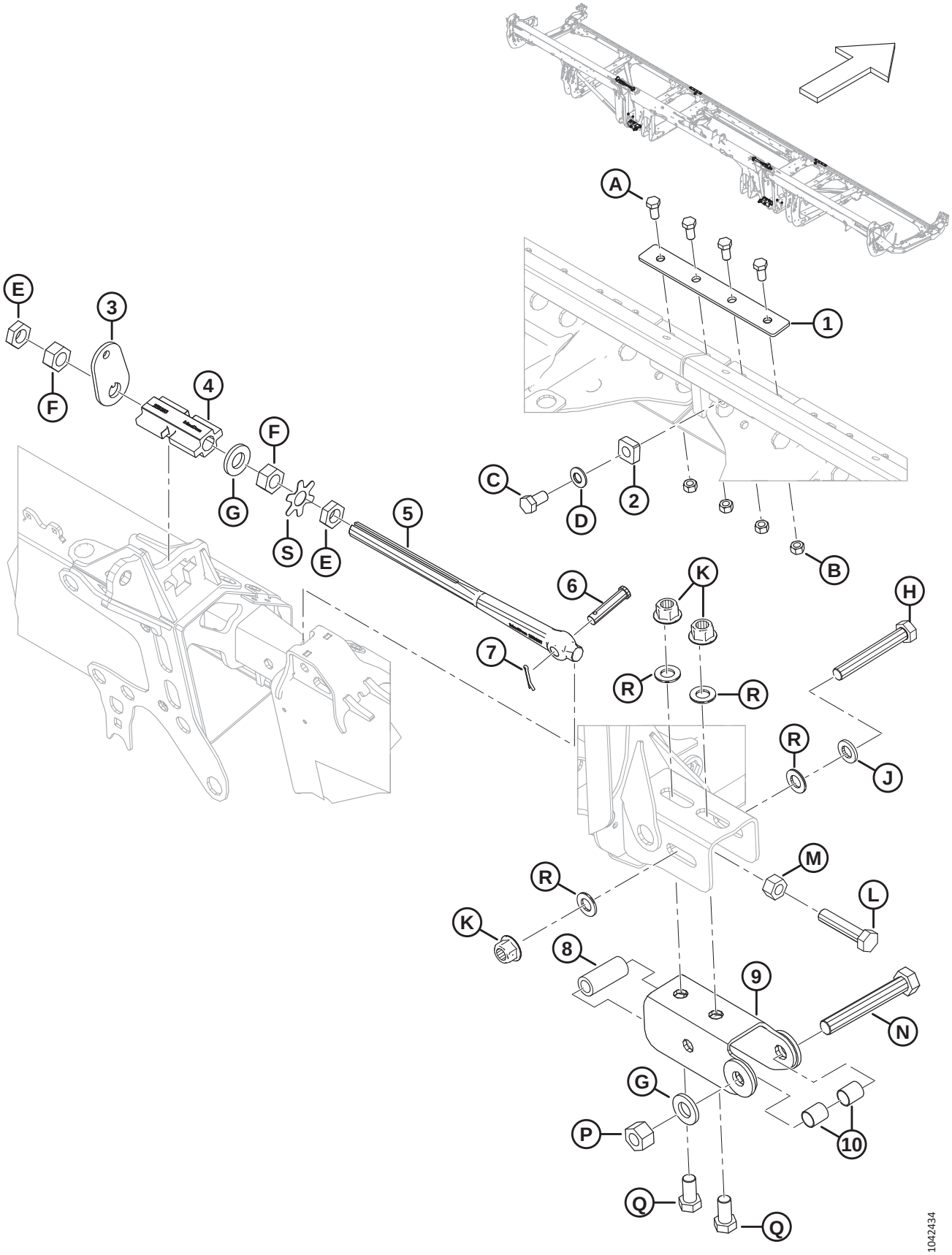

HEADER FRAME COMPONENTS

Ref	Part Number	Description	Qty	Serial Number
1	288438	BAR	2	
2	266277	STOP – HINGE	2	
3	258835	WASHER – WING LOCK	2	
4	258383	LOCK – MACHINED WING LOCK	2	
5	258637	LINK – LOCK LINK ADJ	2	
6	18704	PIN – CLEVIS, 15 MM X 68 MM OAL	2	
7	18607	PIN – COTTER 5/32 DIA X 1.5 ZP	2	
8	52129	SPACER	2	
9	312704	CHANNEL WELDT	2	
10	258843	BUSHING	4	
A	50155	BOLT – HEX HD TFL M12 X 1.75 X 25-8.8-AA1J		
B	184694	NUT – HEX M12 X 1.75-8-AA1J		
C	136143	BOLT – HEX HD TFL M16 X 2 X 30-10.9-AA1J		
D	184718	WASHER – CON SPRING M16 STL SAE 1050-1075		
E	136513	NUT – HEX THIN FINE M24 X 1.5-8-AA1J		
F	136512	NUT – HEX FINE M24 X 1.5-8-AA1J		
G	31774	WASHER – FLAT 1-1/8-30HRC-AC0C		
H	136887	BOLT – HEX HD M20 X 2.5 X 140-10.9		
J	21540	WASHER – HARD ASTM F436M20-340HV-AB2C		
K	136122	NUT – HEX FLG CTR LOC M20 X 2.5-10-AA1J		
L	320169	BOLT – HEX HD TFL M20 X 2.5 X 90-8.8-ZINC		
M	136124	NUT – HEX M20 X 2.5-10-AA1J		
N	320171	BOLT – HEX HD M24 X 3 X 160-10.9-ZINC		
P	136848	NUT – HEX TOP LOC M24 X 3-10-AA1J		
Q	252303	BOLT – HEX HD TFL M20 X 2.5 X 40-10.9-A3L		
R	136701	WASHER – NORDLOCK M20		
S	360835	PLATE – WASHER TAB M24 NUT		

2 Header Frame End Panels

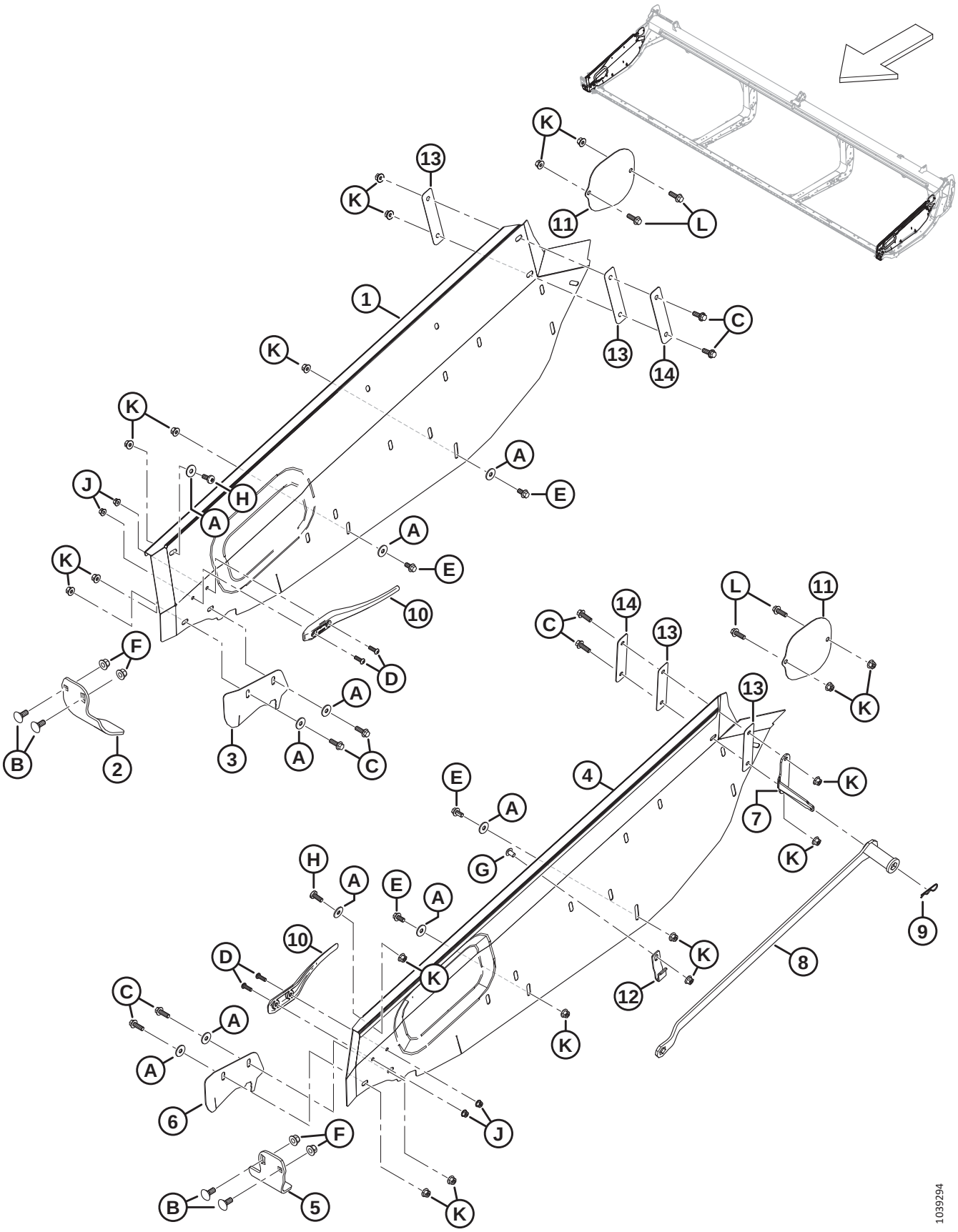

HEADER FRAME END PANELS

Ref	Part Number	Description	Qty	Serial Number
1	368226	END PANEL – RH **(2023 AND PRIOR)** [1]	**1**	**–486189**
	360749	**END PANEL – RH (2024 AND LATER)** [2]	**1**	**486190–**
2	289358	GUARD – RH KNIFE HEAD	1	
3	289349	COVER – RH KNIFE OPENING **(2023 AND PRIOR)** [3]	1	**–486189**
	360751	**COVER – RH KNIFE OPENING (2024 AND LATER)** [4]		**486190–**
4	368225	END PANEL – LH **(2023 AND PRIOR)** [1]	**1**	**–486189**
	360748	**END PANEL – LH (2024 AND LATER)** [2]	**1**	**486190–**
5	289220	GUARD – LH KNIFE HEAD	1	
6	289341	COVER – LH KNIFE OPENING **(2023 AND PRIOR)** [3]	1	**–486189**
	360750	**COVER – LH KNIFE OPENING (2024 AND LATER)** [4]		**486190–**
7	340122	BRACKET – WRENCH HOLDER	1	
8	360361	TOOL – HEADER ADJUSTER WELDT [5]	1	
9	13125	PIN – HAIR	1	
10	289742	DEFLECTOR – FINGER	2	
11	289261	SHIELD – UCA COVER	2	
12	340113	RETAINER – WRENCH FRONT	1	
13	340193	INSULATOR – HEADER PANELS [6]	4	
14	340215	PLATE [7]	2	
A	184712	WASHER – FLAT LARGE M10-200HV		
B	184667	BOLT – RHSN M12 X 1.75 X 30-8.8-ZINC		
C	184665	BOLT – HEX FLG HD M10 X 1.5 X 30-10.9-AA1J		
D	184649	SCREW – HEX SOC BTN HD M8 X 1.25 X 25		
E	152655	BOLT – HEX FLG HD M10 X 1.5 X 20-8.8-AA1J		
F	136431	NUT – HEX FLG CTR LOC M12 X 1.75-10		
G	136640	SCREW – TORX TRUSS HD M10 X 1.5 X 16 X SPCL-8.8-AA1J		
H	320304	SCREW – TORX TRUSS HD M10 X 1.5 X 25-SPCL-8.8-ZINC		
J	135337	NUT – HEX FLG CTR LK M8 X 1.25-8-AA1J		
K	135799	NUT – HEX FLG CTR LOC M10 X 1.5-10		
L	184661	BOLT – HEX HD TFL M10 X 1.5 X 30-8.8-AA1J		

1. Service part only for model year 2023 and prior headers.
2. Service part only for model year 2024 and later headers.
3. Service part only for model year 2023 and prior headers. Not recommended in all conditions; used primarily in rice and fine grasses to keep crop from getting caught in the delivery opening.
4. Service part only for model year 2024 and later headers. Not recommended in all conditions; used primarily in rice and fine grasses to keep crop from getting caught in the delivery opening.
5. Kit includes header adjuster tool (NSS) and instructions.
6. Two plastic washers (MD #150819) were previously used on the inboard side of the end panel.
7. Two large flat washers (MD #184712) were previously used on the inboard side of the end panels, between plastic washers (MD #150819) and M10 hex bolt (MD #184665).

3 Header Frame – Split Frame Hardware

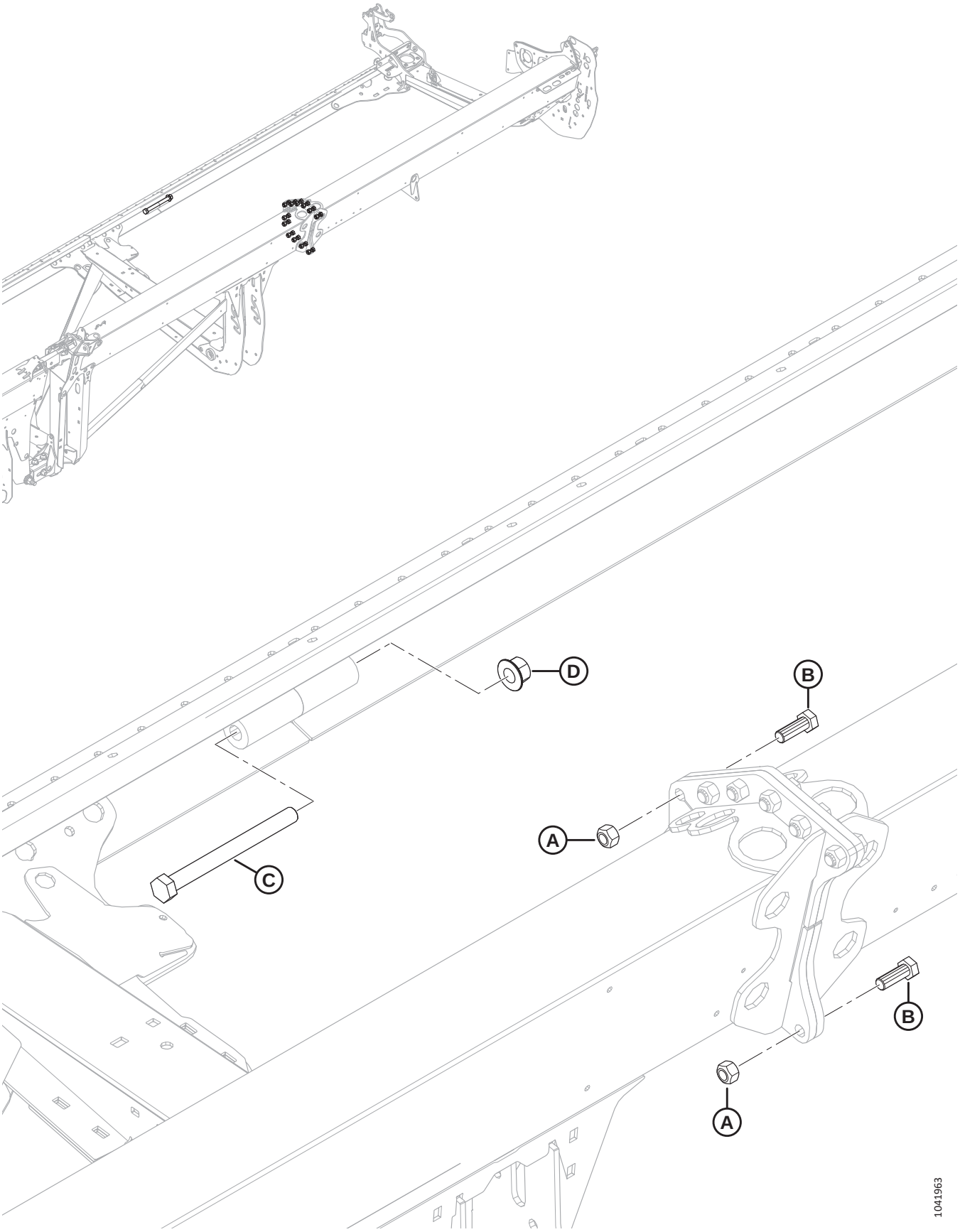

HEADER FRAME – SPLIT FRAME HARDWARE

Ref	Part Number	Description	Qty	Serial Number
A	320026	NUT – HEX TOP LOCK M16 X 2-10-ZINC		
B	136671	BOLT – HEX HD M16 X 2 X 45-10.9-ZINC		
C	252581	BOLT – HEX HD M20 X 2.5 X 220-10.9-AA1J		
D	136122	NUT – HEX FLG CTR LOC M20 X 2.5-10-AA1J		

4 Manual Case, Retaining Pin, and Knife Storage

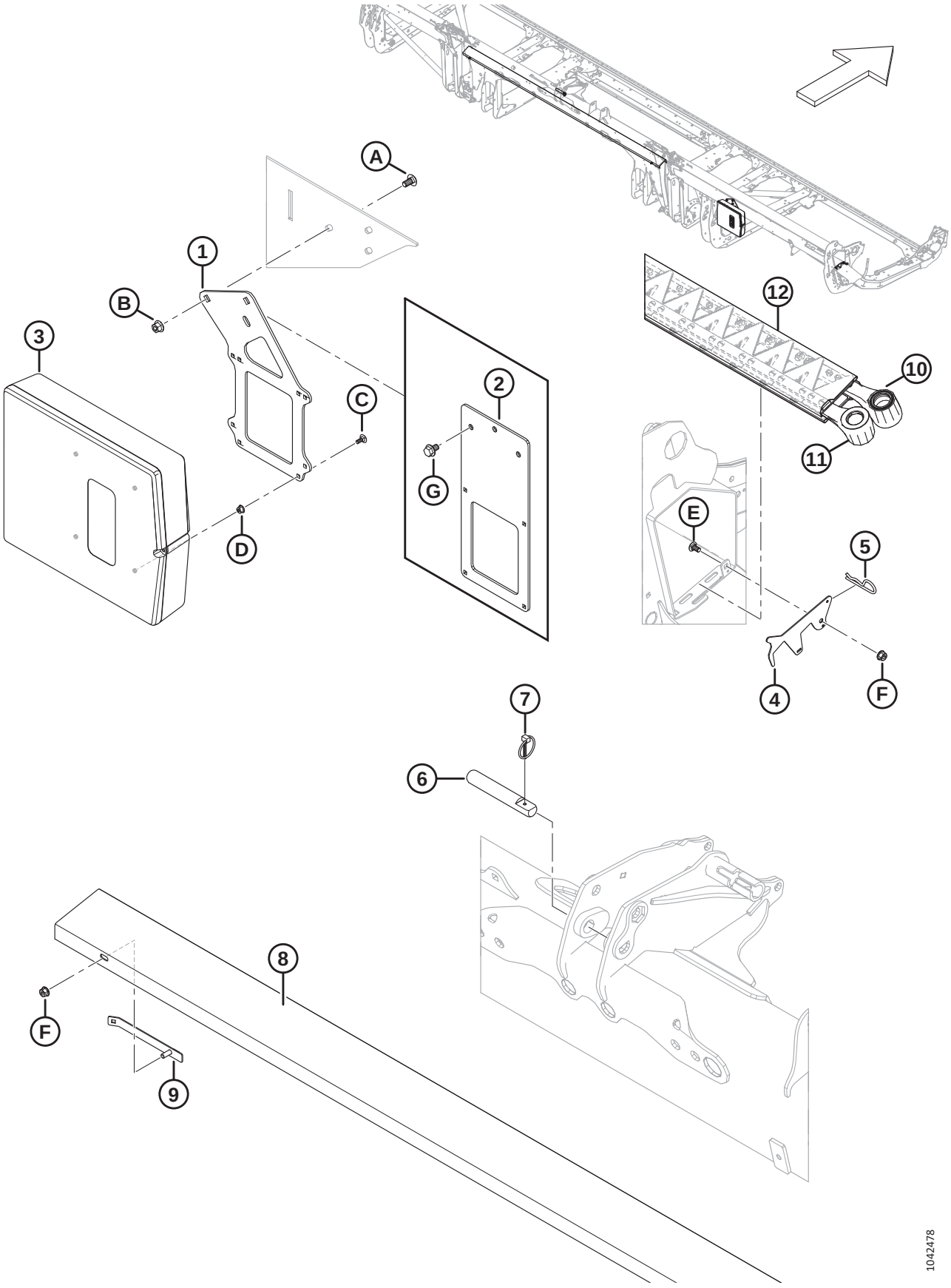

Ref	Part Number	Description	Qty	Serial Number
1	360175	SUPPORT – MANUAL CASE [8]	1	
2	360176	SUPPORT – MANUAL CASE (FD225) [9]	1	
3	220107	CASE – MANUAL	1	
4	286741	LATCH – RETAINER, KNIFE STORAGE	1	
5	13125	PIN – HAIR	1	
6	313734	PIN – CENTER LINK [10]	1	
7	102264	PIN – LYNCH 3/16 X 1 9/16 IN	1	
8	286502	SUPPORT – SPARE KNIFE, SHORT (FD225, FD230, FD235, FD240, FD241) [11]	1	
	286503	SUPPORT – SPARE KNIFE, LONG (FD245 AND FD250) [12]	1	
9	286725	RETAINER WELDMENT, SPARE KNIFE SUPPORT	2	
10	REF	KNIFE – SPARE, SK [13]	1	
11	REF	KNIFE – SPARE, DK [14]	1	
12	NSS	SHIELD – KNIFE	A/R	
A	184657	BOLT – RHSSN M10 X 1.5 X 20-8.8-AA1J		
B	135799	NUT – HEX FLG CTR LOC M10 X 1.5-10		
C	136748	BOLT – RHSN M6 X 1 X 16-8.8-ZINC		
D	152668	NUT – HEX FLG CTR LOC M6 X 1-8		
E	191489	BOLT – RHSSN TFL M8 X 1.25 X 16-8.8-AA1J		
F	135337	NUT – HEX FLG CTR LK M8 X 1.25-8-AA1J		
G	136151	BOLT – HEX FLG HD TFL M10 X 1.5 X 16-8.8-AA1J [9]		

8. All headers except FD225.
9. FD225 headers only.
10. The center-link pin is used to hold the cylinder from the FM200 center-link; refer to Section *186 Hydraulics – Center-Link and Header Tilt / Reel Fore-Aft, page 467*.
11. Used for FD225, FD230, FD235, FD240, and FD241 headers only.
12. Used for FD245 and FD250 headers only.
13. For service parts, refer to Sections *34 Knives – Single-Knife Headers (FD225), page 73*, *35 Knives – Single-Knife Headers (FD230, FD235, and FD240), page 75*.
14. For service parts, refer to Sections *36 Knives – Double-Knife Headers (FD235 and FD240), page 79*, *37 Knives – Double-Knife Headers (FD241), page 85*, *38 Knives – Double-Knife Headers (FD245), page 89*, or *39 Knives – Double-Knife Headers (FD250), page 93*.

5 Transition Pan

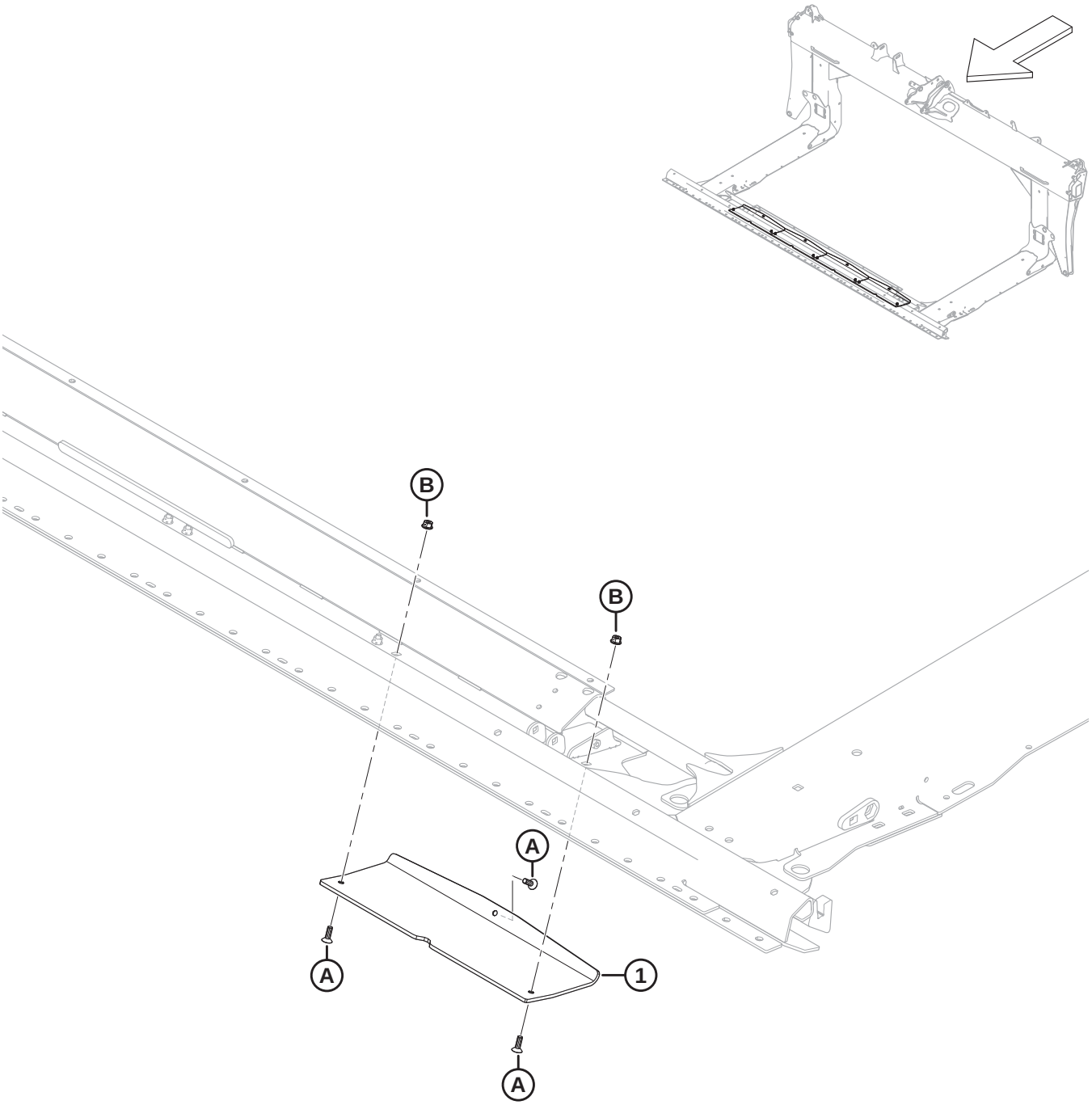

1032288

TRANSITION PAN

Ref	Part Number	Description	Qty	Serial Number
1	357797	SHOE – TRANSITION PAN SKID	4	
A	136492	SCREW – HEX SOC CSK HD TFL M8 X 1.25 X 25-10.9-AA1J		
B	135337	NUT – HEX FLG CTR LK M8 X 1.25-8-AA1J		

6 Divider Cones

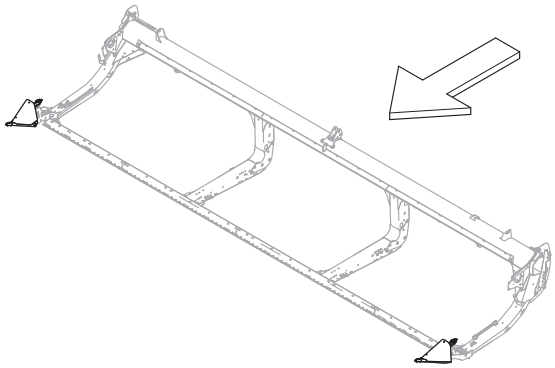

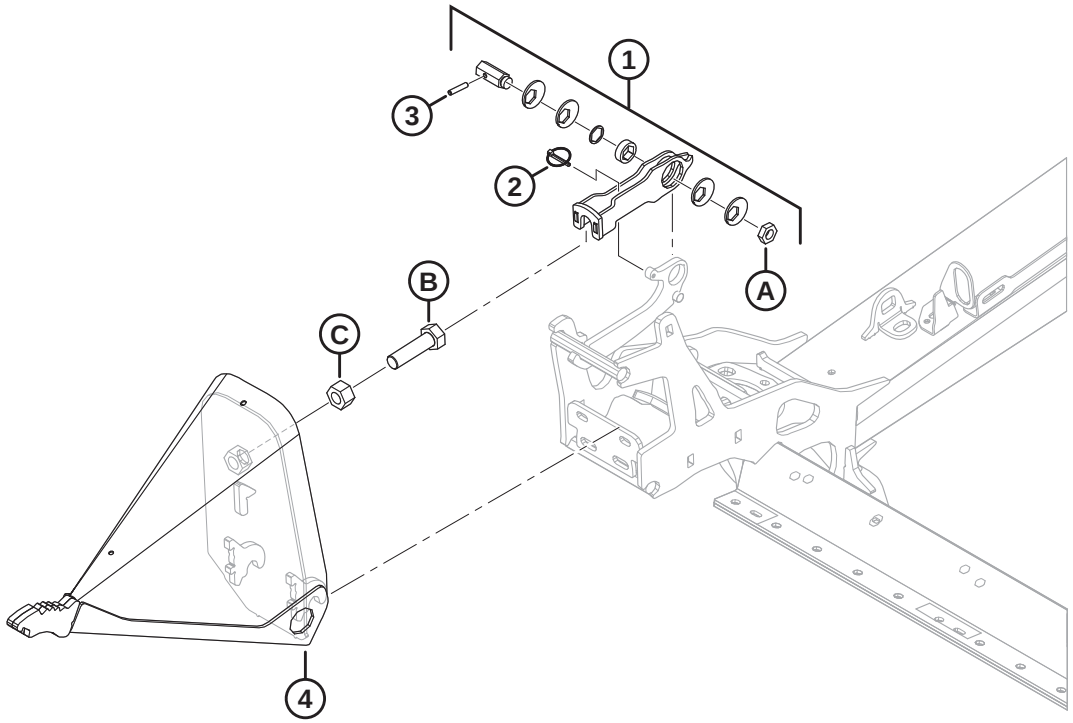

1032287

DIVIDER CONES

Ref	Part Number	Description	Qty	Serial Number
1	313767	KIT – DIVIDER LATCH [15]	2	
2	50193	PIN – LYNCH	2	
3	16266	PIN – SPRING 1/4 DIA X 1.25 LG	2	
4	289235	DIVIDER ASSEMBLY – LH [16]	1	
	289359	DIVIDER ASSEMBLY – RH [16]	1	
A	320218	NUT – HEX THIN M16 X 2-SPCL-5-ZINC		
B	136339	BOLT – HEX HD FINE TFL M20 X 1.5 X 70 X 8.8-ZINC		
C	136342	NUT – HEX FINE M20 X 1.5 X 10-AA3L		

15. The Divider Latch kit includes latch (NSS), lynch pin (MD #50193), spring pin (MD #16266), eccentric disc (NSS), bushing (NSS), hexagonal shaft (NSS), shim (NSS), latch (NSS), decals (MD #289762, MD #289763), and nut (MD #320218). For decals, refer to Section *108 Decals and Reflectors – FD2 Series, page 259*.
16. Includes bolt (MD #136339) and nut (MD #136342).

7 Divider Rods and Storage

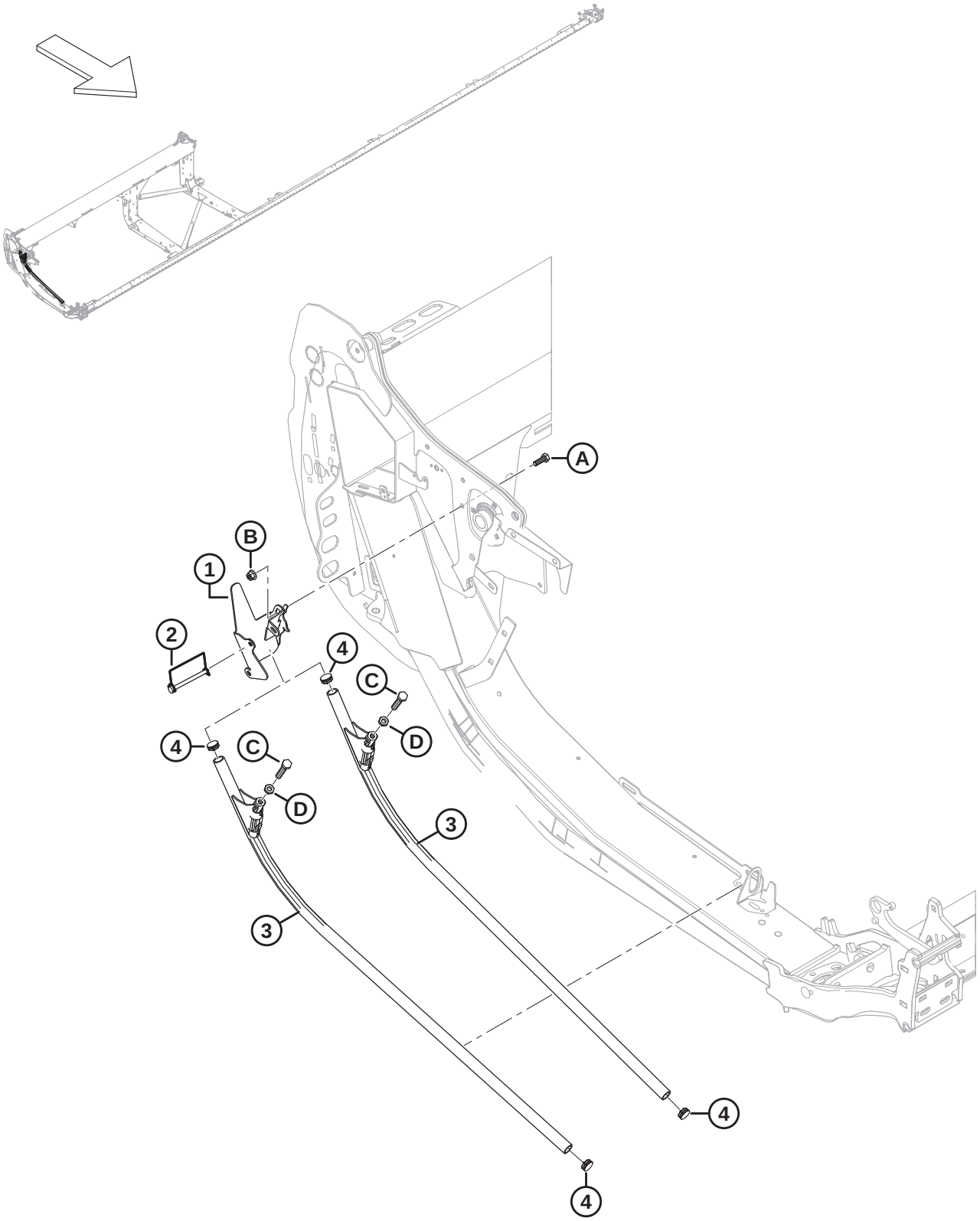

DIVIDER RODS AND STORAGE

Ref	Part Number	Description	Qty	Serial Number
1	360127	SUPPORT WELDT – ROD STORAGE	1	
2	136749	PIN – LYNCH	1	
3	289654	DIVIDER – ROD ASSY [17]	2	
4	335301	PLUG – PLASTIC, SNAP-IN	2	
A	184661	BOLT – HEX HD TFL M10 X 1.5 X 30-8.8-AA1J		
B	135799	NUT – HEX FLG CTR LOC M10 X 1.5-10		
C	252541	BOLT – HEX HD TFL M12 X 1.75 X 65-8.8-AA3L		
D	184696	NUT – HEX THIN M12 X 1.75-05-AA1J		

17. Includes bolt (MD #252541), nut (MD #184696), and two plugs (MD #335301).

8 Endshields – MacDon

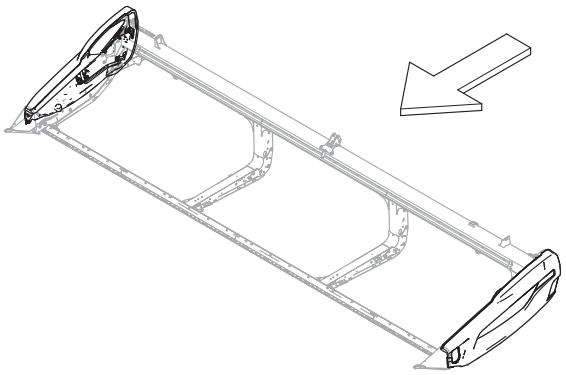

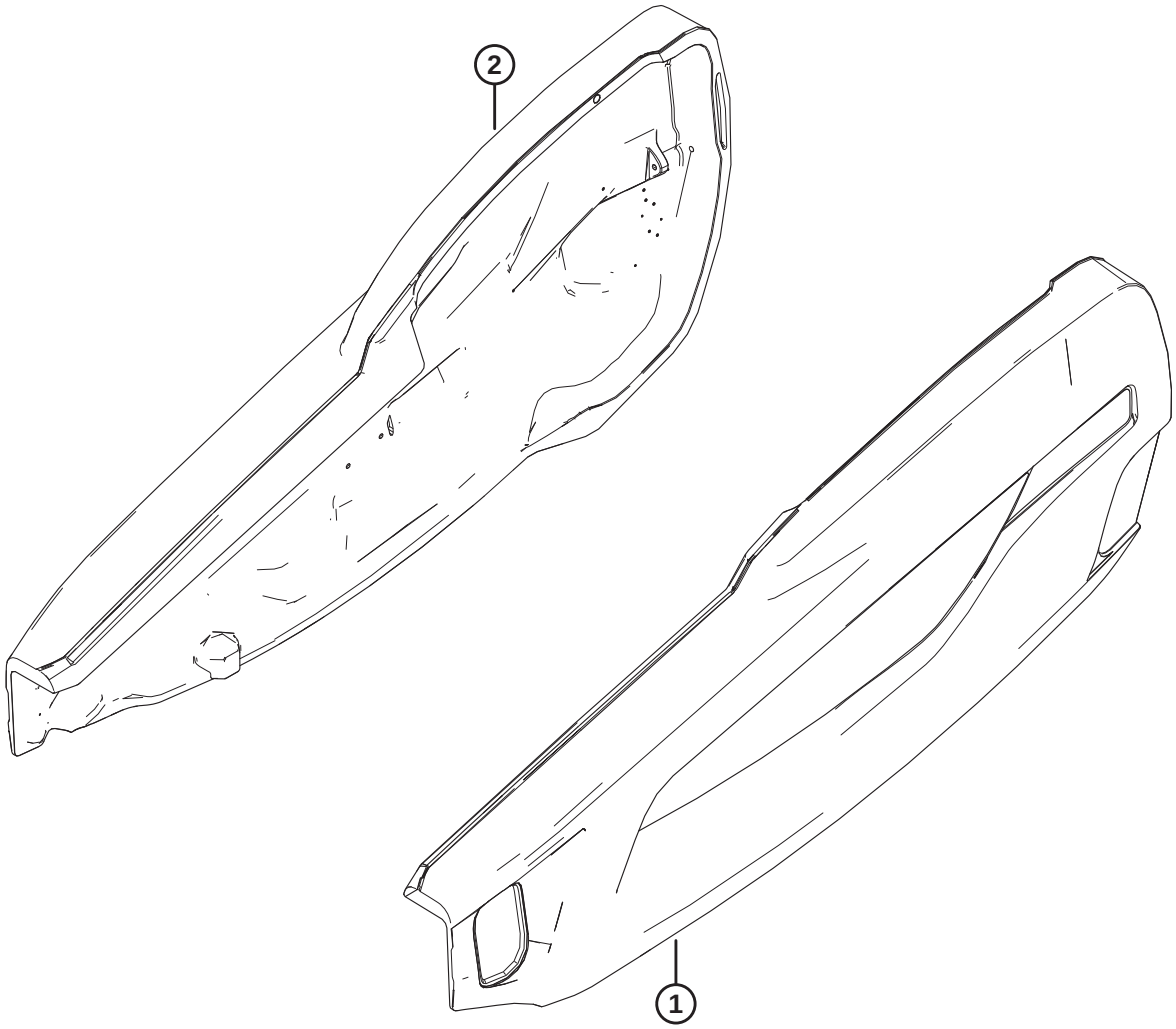

1034956

Ref	Part Number	Description	Qty	Serial Number
1	360554	SHIELD ASSY – BLACK, LH [18]	1	
2	360555	SHIELD ASSY – BLACK, RH [18]	1	
	165524	REFLECTOR – RED, 230 MM [19]		

18. Refer to Section *109 Decals – Product Identification, page 261* for product identification decals.
19. Refer to Section *108 Decals and Reflectors – FD2 Series, page 259*. This reflector is used on the right endshield only.

9 Endshields – Case

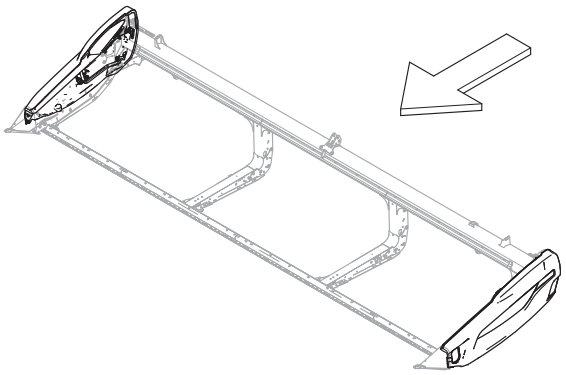

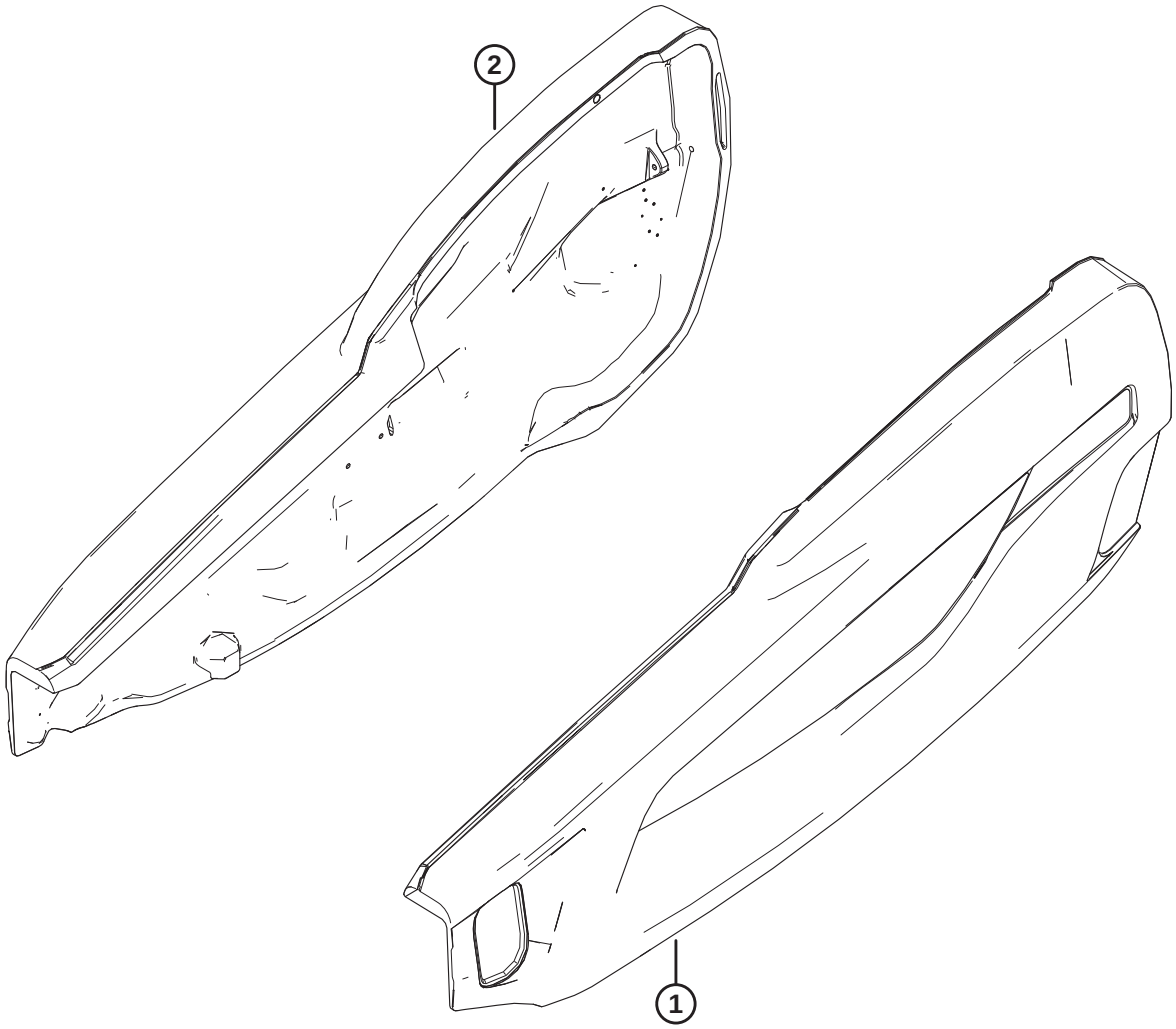

1039649

Ref	Part Number	Description	Qty	Serial Number
1	360552	SHIELD ASSY – CIH AG RED, LH [20]	1	
2	360448	SHIELD ASSY – CIH AG RED, RH [20]	1	
	165524	REFLECTOR – RED, 230 MM [21]		

20. Refer to Section *110 Decals – Product Identification, Case, page 263* for product identification decals.
21. Refer to Section *108 Decals and Reflectors – FD2 Series, page 259*. This reflector is used on the right endshield only.

10 Endshields – New Holland

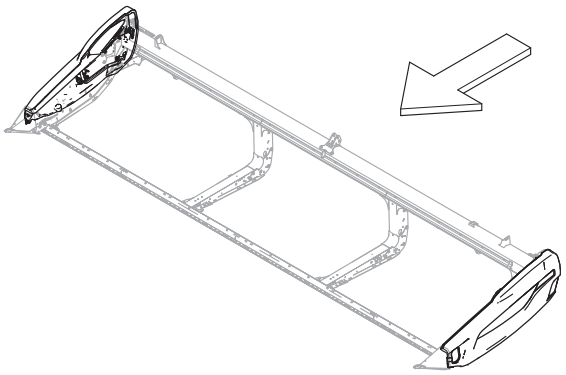

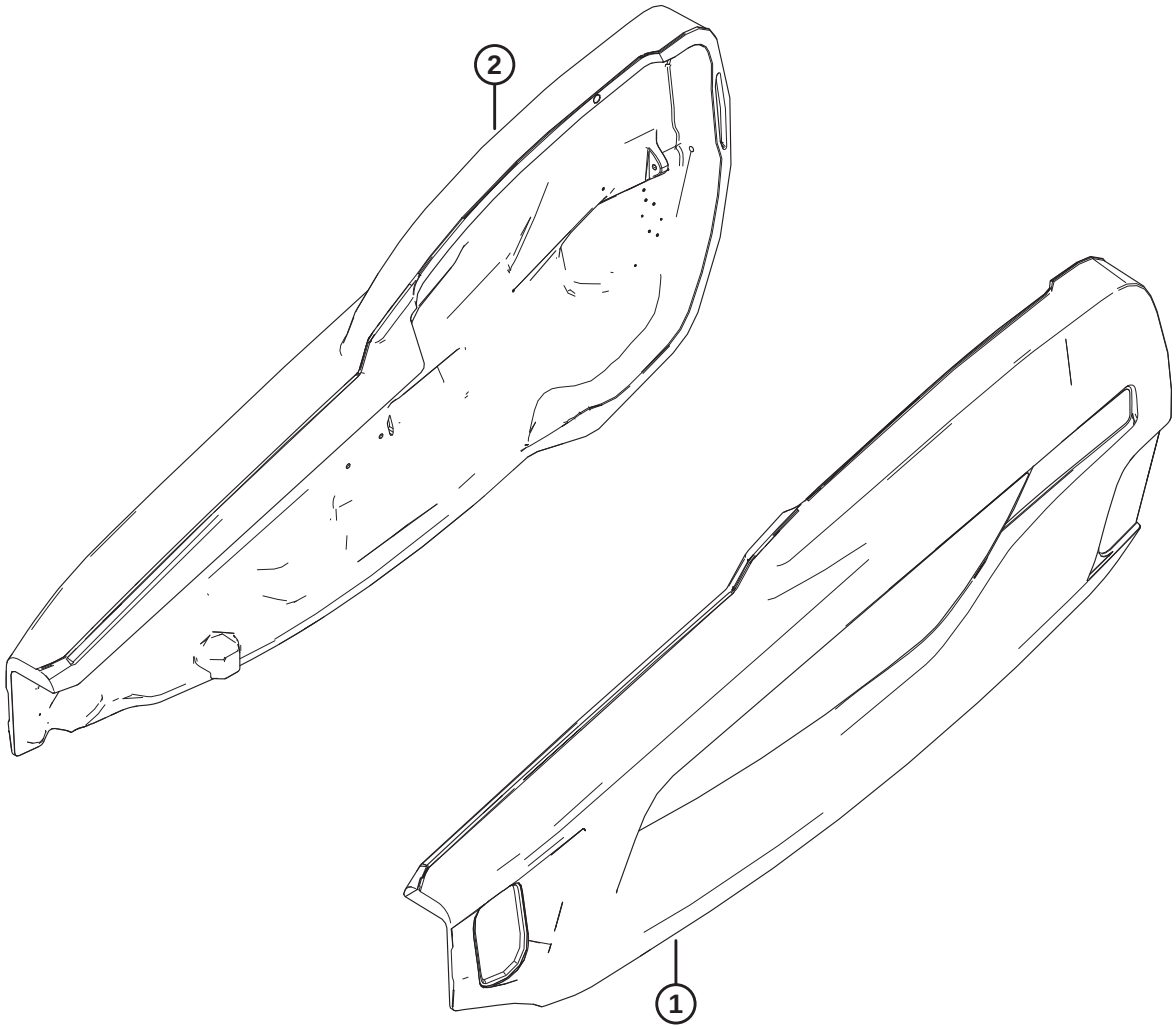

1039650

Ref	Part Number	Description	Qty	Serial Number
1	360553	SHIELD ASSY – NH YELLOW, LH [22]	1	
2	360449	SHIELD ASSY – NH YELLOW, RH [22]	1	
	165524	REFLECTOR – RED, 230 MM [23]		

22. Refer to Section *111 Decals – Product Identification, New Holland, page 267* for product identification decals.
23. Refer to Section *108 Decals and Reflectors – FD2 Series, page 259*. This reflector is used on the right endshield only.

11 Endshield Mount Components

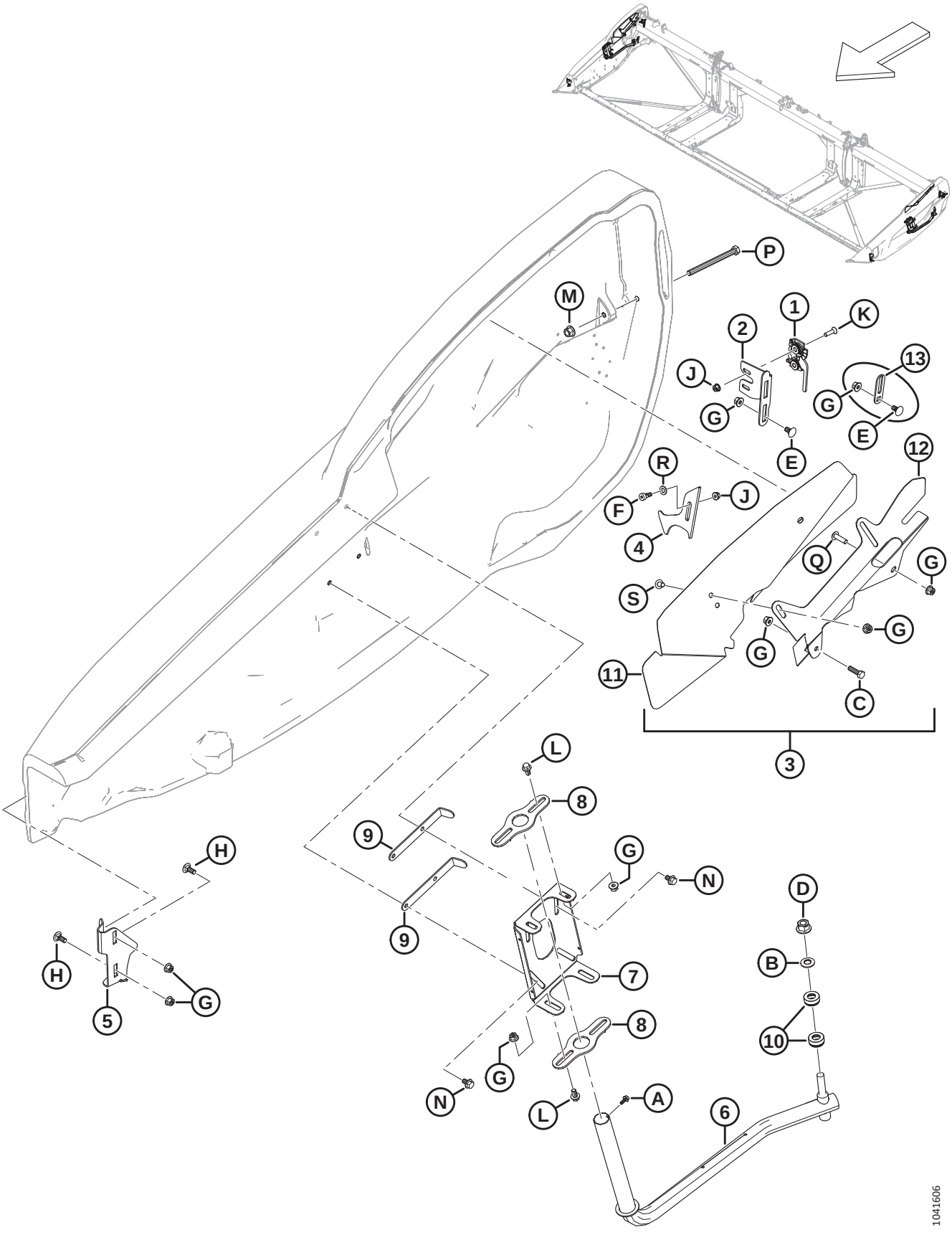

ENDSHIELD MOUNT COMPONENTS

Ref	Part Number	Description	Qty	Serial Number
1	289925	LATCH – RH 2 STAGE	1	
	289924	LATCH – LH 2 STAGE	1	
2	289621	SUPPORT – RH LATCH	1	
	289618	SUPPORT – LH LATCH	1	
3	360785	KIT – NECK SHIELD RH [24]	1	
	360784	KIT – NECK SHIELD LH [25]	1	
4	289519	LATCH – RH	1	
	289520	LATCH – LH	1	
5	289483	SUPPORT – RH FRONT	1	
	289380	SUPPORT – LH FRONT	1	
6	289439	ARM – RH WELDT	1	
	289375	ARM – LH WELDT	1	
7	313432	PIVOT – SHIELD RH	1	
	313303	PIVOT – SHIELD LH	1	
8	313304	PIVOT	4	
9	313783	RETAINER	4	
10	289487	BEARING – THRUST	4	
11	360379	SHIELD – RH NECK [26]	1	
	360378	SHIELD – LH NECK [26]	1	
12	360375	SUPPORT – RH NECK SHIELD [26]	1	
	360374	SUPPORT – LH NECK SHIELD [26]	1	
13	313713	GUIDE – LATCH [27]	2	
A	252284	SCREW – HEX WSHR HD M6 X 1 X 16-450HV		
B	184718	WASHER – CON SPRING M16 STL SAE 1050-1075		
C	184665	BOLT – HEX FLG HD M10 X 1.5 X 30-10.9-AA1J		
D	136736	NUT – HEX FLG TOP LOCK M16 X 1.5-10-AA2L		
E	136178	BOLT – RHSN M10 X 1.5 X 20-8.8-AA1J		
F	135894	SCREW – HEX SOC HD SHLDR M10		
G	135799	NUT – HEX FLG CTR LOC M10 X 1.5-10		
H	135785	BOLT – RHSN M10 X 1.5 X 25-8.8-AA1J		
J	135337	NUT – HEX FLG CTR LK M8 X 1.25-8-AA1J		
K	135336	SCREW – CSK MCH M8 X 1.25 X 30 GR5 AA1J		
L	152655	BOLT – HEX FLG HD M10 X 1.5 X 20-8.8-AA1J		
M	136431	NUT – HEX FLG CTR LOC M12 X 1.75-10		
N	136231	BOLT – HEX SER FLG HD M10 X 1.5 X 16 X SPCL-8.8		
P	135696	BOLT – HEX HD M12 X 1.75 X 150-8.8-AA1J		
Q	320327	SCREW – TORX TRUSS HD M10 X 1.5 X 35-SPCL-8.8-ZINC		

24. The RH Neck Shield kit is used to service superseded RH neck shields (MD #340714) for model year 2023 and prior units. The kit includes RH neck shield (MD #360379), RH neck shield support (MD #360375), two screws (MD #136640), two nuts (MD #135799), and instructions.
25. The LH Neck Shield kit is used to service superseded LH neck shields (MD #340111) for model year 2023 and prior units. The kit includes LH neck shield (MD #360378), LH neck shield support (MD #360374), two screws (MD #136640), two nuts (MD #135799), and instructions.
26. Used for units made in model year 2024 and later, or for model year 2023 and prior units that have been serviced with neck shield kits (MD #360784 and MD #360785).
27. For export headers only.

ENDSHIELD MOUNT COMPONENTS

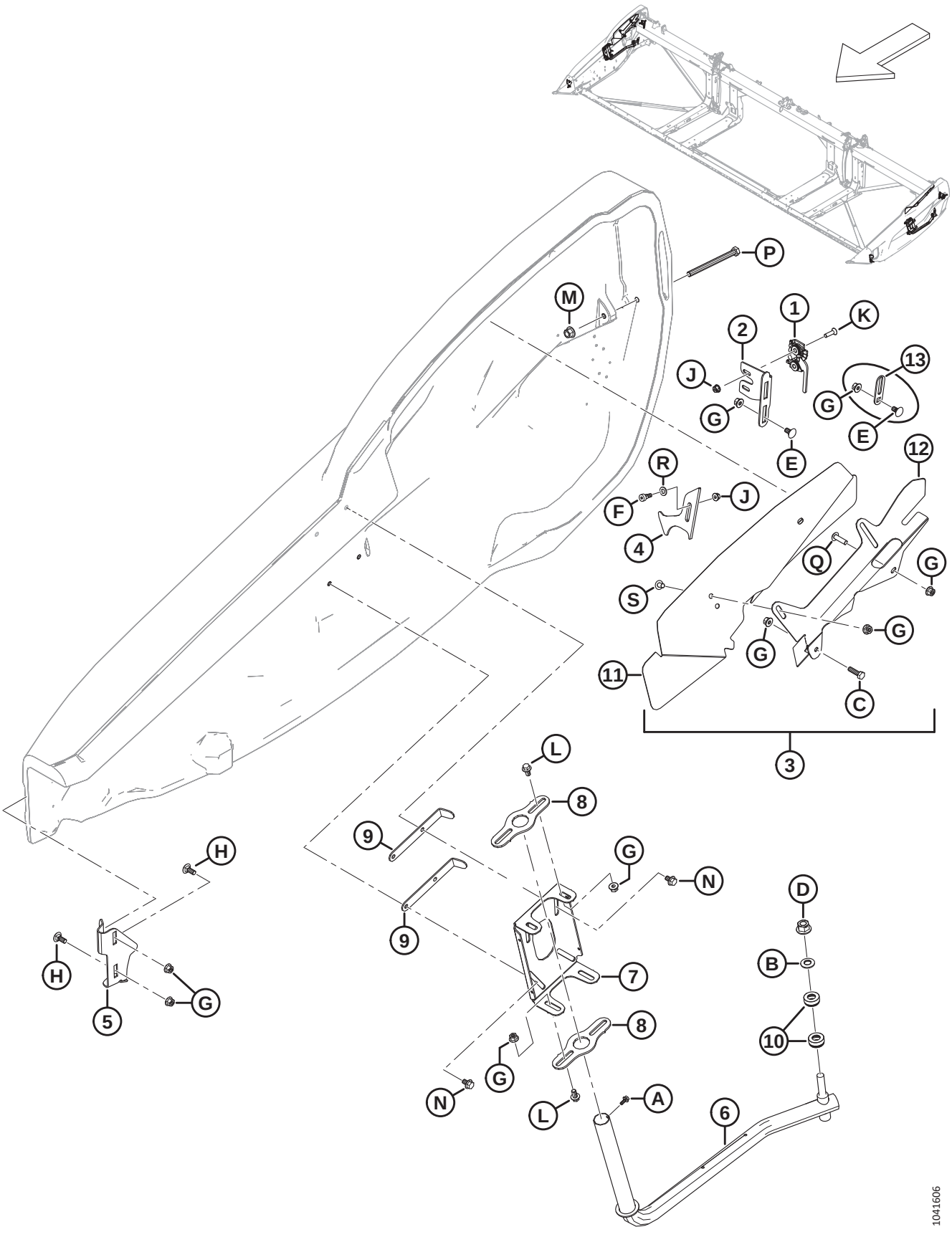

ENDSHIELD MOUNT COMPONENTS

Ref	Part Number	Description	Qty	Serial Number
R	184711	WASHER – FLAT REG M10-200HV-AA1J		
S	136640	SCREW – TORX TRUSS HD M10 X 1.5 X 16 X SPCL-8.8-AA1J		

12 Draper

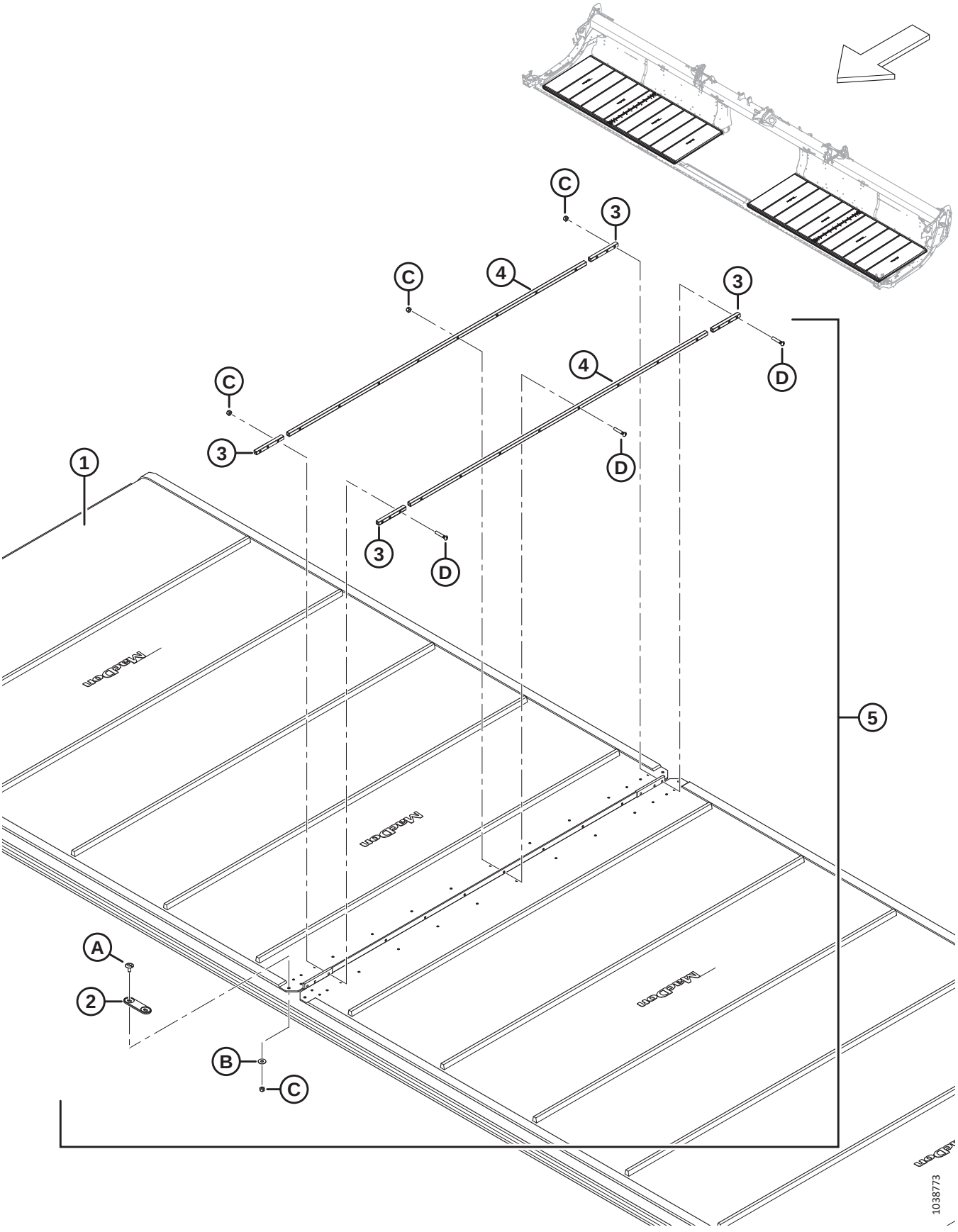

Ref	Part Number	Description	Qty	Serial Number
1	319098	KIT – DRAPER 25 FT, 50 INCH WIDE [28]	2	
	319099	KIT – DRAPER 30 FT, 50 INCH WIDE [28]	2	
	319100	KIT – DRAPER 35 FT, 50 INCH WIDE [28]	2	
	319101	KIT – DRAPER 40 FT, 50 INCH WIDE [28]	2	
	319102	KIT – DRAPER 41 FT, 50 INCH WIDE [28]	2	
	319103	KIT – DRAPER 45 FT, 50 INCH WIDE [28]	2	
	319104	KIT – DRAPER 50 FT, 50 INCH WIDE [28]	2	
	319105	KIT – DRAPER REPAIR 50 INCH, 500 MM (19.7 IN.) LG [29]	A/R	
	319540	KIT – BULK DRAPER 50 IN. [30]	OPT	
2	319662	CONNECTOR – BRIDGE	2	
3	NSS	BAR – CONNECTOR DRAPER HEM [31]	8	
	319347	KIT – DRAPER CONNECTOR 50 INCH, HEM [32]	A/R	
4	NSS	BAR – CONNECTOR DRAPER CENTER [33]	4	
	319346	KIT – DRAPER CONNECTOR 50 INCH, CENTER [34]	A/R	
5	319095	KIT – DRAPER CONNECTOR 50 INCH [35]	2	
A	320148	SCREW – TRUSS SLT HD M6 X 1.0 16-SPCL-8.8-ZINC		
B	184706	WASHER – FLAT LARGE M6-200HV		
C	286479	NUT – CTR LOC CSK M6 X 1 50PK [36]		
D	319345	KIT – SCREW M6 X 34 C/W NUT 30PK [37]		

28. The kit includes draper (NSS) and draper connector kit (MD #319095).
29. The kit includes draper repair piece (NSS) and two draper connector kits (MD #319095).
30. The kit includes a bulk draper roll and instructions.
31. Not sold separately (NSS). Order either the draper hem connector kit (MD #319347) or the draper connector kit (MD #319095).
32. The kit includes two draper hem connector bars (NSS) and hardware (MD #226259 and MD #320240).
33. Not sold separately (NSS). Order either the draper center connector kit (MD #319346) or the draper connector kit (MD #319095).
34. The kit includes two draper center connector bars (NSS) and hardware (MD #226259 and MD #320240).
35. One kit per side; Includes two draper center connector bars (NSS), four draper hem connector bars (NSS), bridge connector (MD #319662), and hardware.
36. The kit includes 50 nuts; used to service hardware C shown in the illustration.
37. The kit includes 30 screws and 30 nuts; used to service hardware D shown in the illustration.

13 Draper – Backsheet Panels (FD225)

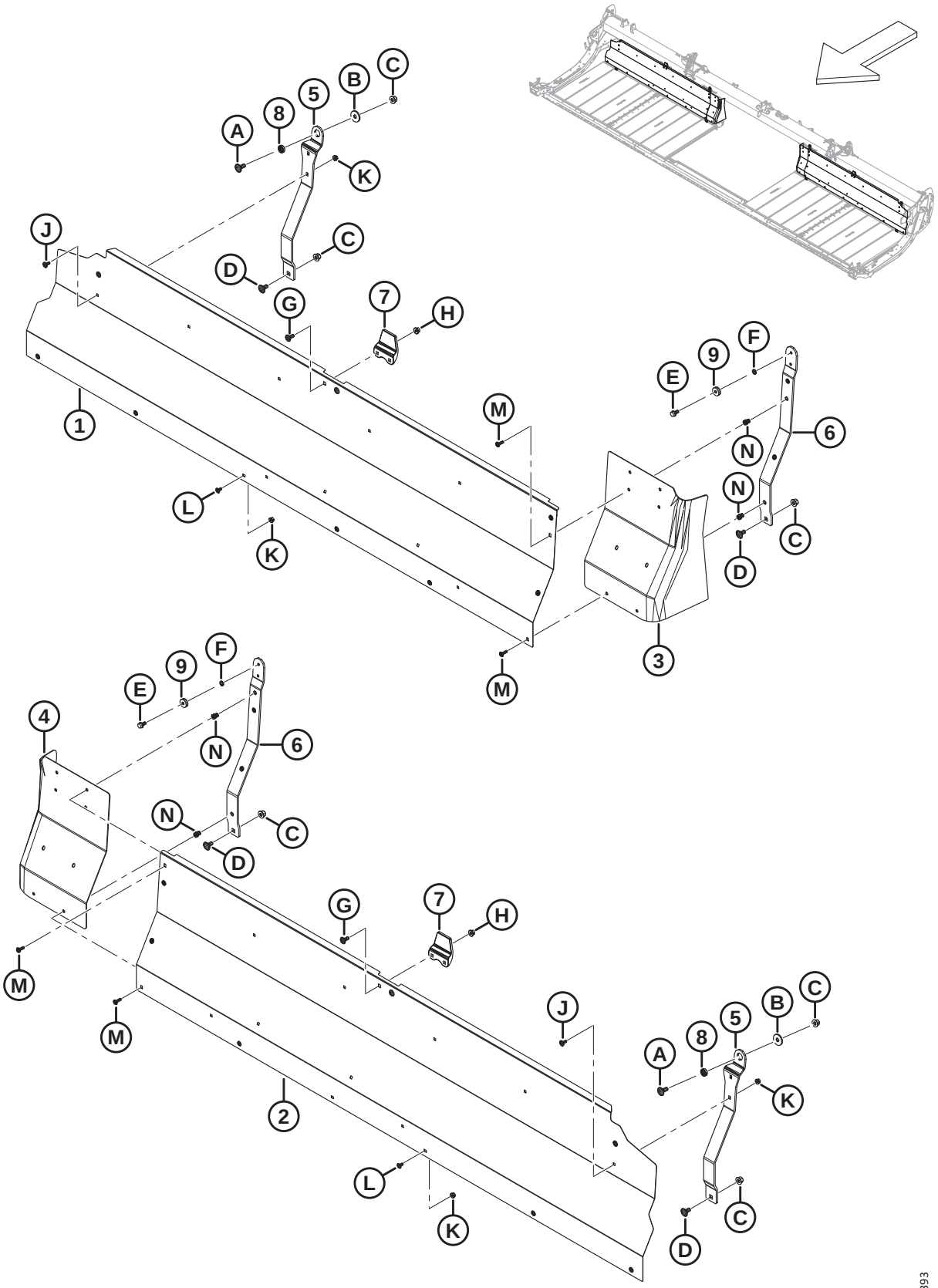

DRAPER – BACKSHEET PANELS (FD225)

Ref	Part Number	Description	Qty	Serial Number
1	275405	PANEL – BACKSHEET 25 FT RH	1	
2	275404	PANEL – BACKSHEET 25 FT LH	1	
3	319223	EXTENSION – BACKSHEET RH	1	
4	319222	EXTENSION – BACKSHEET LH	1	
5	319394	SUPPORT – DECK FLEX OUTBOARD	2	
6	319366	SUPPORT – DECK FLEX INBOARD [38]	2	
7	145840	GUIDE – BACKSHEET	2	
8	275563	SPACER – SPECIAL ROTATION	2	
9	18867	BEARING – BALL CYL OD C/W TWO SEALS	2	
A	184667	BOLT – RHSN M12 X 1.75 X 30-8.8-ZINC		
B	275623	WASHER – FLAT		
C	136431	NUT – HEX FLG CTR LOC M12 X 1.75-10		
D	135903	BOLT – RHSN M12 X 1.75 X 25-8.8-ZINC		
E	101897	SCREW – HEX WASH HD 3/8 NC X 3/4		
F	18637	WASHER – REG. LOCK 3/8 IN. NOM. I.D.		
G	135785	BOLT – RHSN M10 X 1.5 X 25-8.8-AA1J		
H	135799	NUT – HEX FLG CTR LOC M10 X 1.5-10		
J	197171	BOLT – RHSN M8 X 1.25 X 20-8.8-ZINC		
K	135337	NUT – HEX FLG CTR LK M8 X 1.25-8-AA1J		
L	191489	BOLT – RHSSN TFL M8 X 1.25 X 16-8.8-AA1J		
M	320290	SCREW – TORX TRUSS HD M8 X 1.25 X 25-SPCL-8.8-ZINC		
N	320181	RIVNUT – M8 X 1.25 HEX 3.8-7.9		

38. The kit includes inboard flex deck support assembly (NSS) and screw (MD #101897).

14 Draper – Backsheet Panels (FD230, FD235, FD240, and FD241)

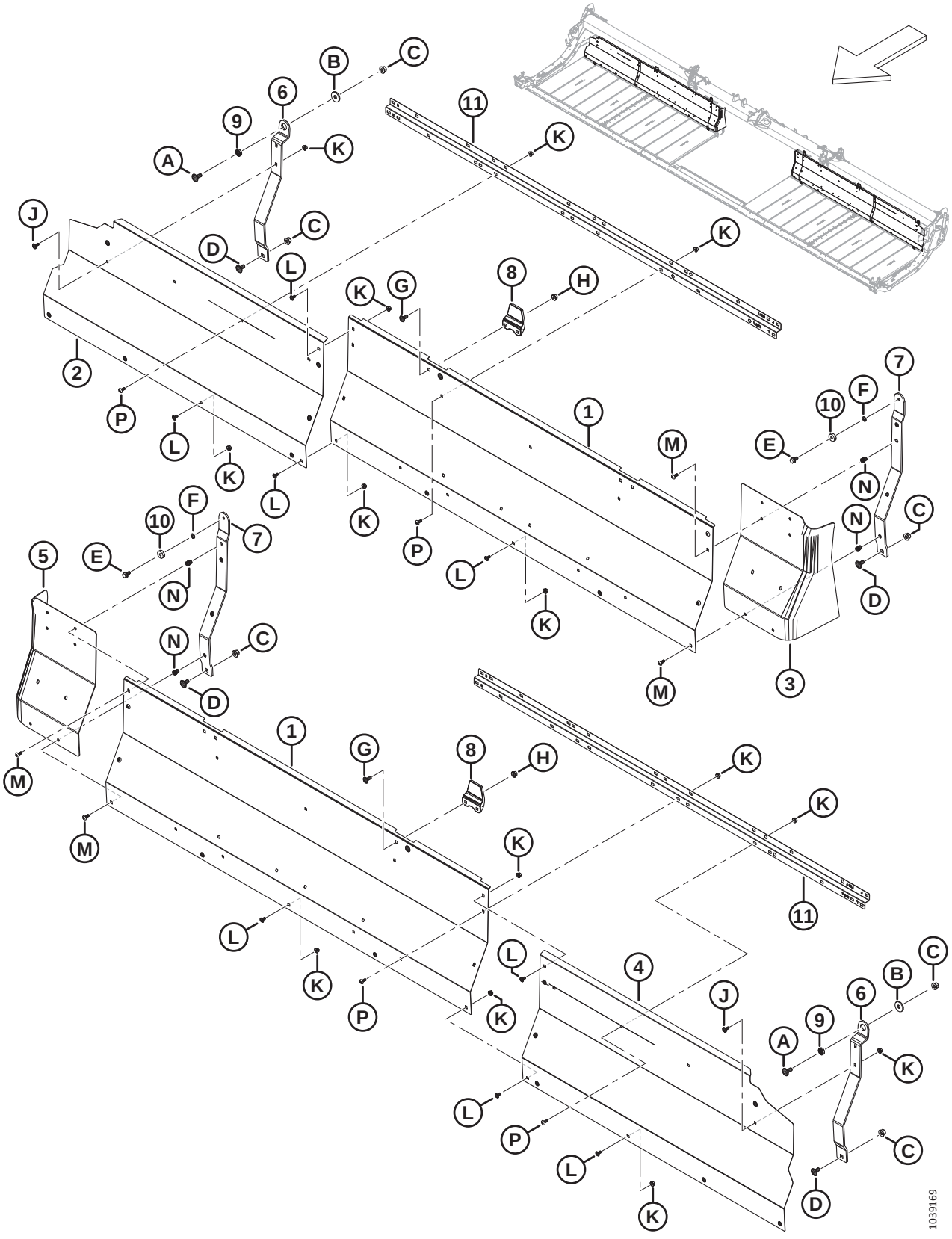

Ref	Part Number	Description	Qty	Serial Number
1	275837	PANEL – BACKSHEET 30, 35, 40, 41 FT INNER	2	
2	275461	PANEL – BACKSHEET 30 FT RH OUTER	1	
	275320	PANEL – BACKSHEET 35 FT RH OUTER	1	
	275287	PANEL – BACKSHEET 40 FT RH OUTER	1	
	275483	PANEL – BACKSHEET 41 FT RH OUTER	1	
3	319223	EXTENSION – BACKSHEET RH	1	
4	275460	PANEL – BACKSHEET 30 FT LH OUTER	1	
	275319	PANEL – BACKSHEET 35 FT LH OUTER	1	
	275286	PANEL – BACKSHEET 40 FT LH OUTER	1	
	275484	PANEL – BACKSHEET 41 FT LH OUTER	1	
5	319222	EXTENSION – BACKSHEET LH	1	
6	319394	SUPPORT – DECK FLEX OUTBOARD	2	
7	319366	SUPPORT – DECK FLEX INBOARD [39]	2	
8	145840	GUIDE – BACKSHEET	2	
9	275563	SPACER – SPECIAL ROTATION	2	
10	18867	BEARING – BALL CYL OD C/W TWO SEALS	2	
11	360509	SUPPORT – BACKSHEET	2	
A	184667	BOLT – RHSN M12 X 1.75 X 30-8.8-ZINC		
B	275623	WASHER – FLAT		
C	136431	NUT – HEX FLG CTR LOC M12 X 1.75-10		
D	135903	BOLT – RHSN M12 X 1.75 X 25-8.8-ZINC		
E	101897	SCREW – HEX WASH HD 3/8 NC X 3/4		
F	18637	WASHER – REG. LOCK 3/8 IN. NOM. I.D.		
G	135785	BOLT – RHSN M10 X 1.5 X 25-8.8-AA1J		
H	135799	NUT – HEX FLG CTR LOC M10 X 1.5-10		
J	197171	BOLT – RHSN M8 X 1.25 X 20-8.8-ZINC		
K	135337	NUT – HEX FLG CTR LK M8 X 1.25-8-AA1J		
L	191489	BOLT – RHSSN TFL M8 X 1.25 X 16-8.8-AA1J		
M	320290	SCREW – TORX TRUSS HD M8 X 1.25 X 25-SPCL-8.8-ZINC		
N	320181	RIVNUT – M8 X 1.25 HEX 3.8-7.9		
P	320190	SCREW – TORX TRUSS HD M8 X 1.25 X 20-SPCL-8.8-ZINC		

39. The kit includes inboard flex deck support assembly (NSS) and screw (MD #101897).

15 Draper – Backsheet Panels (FD245 and FD250)

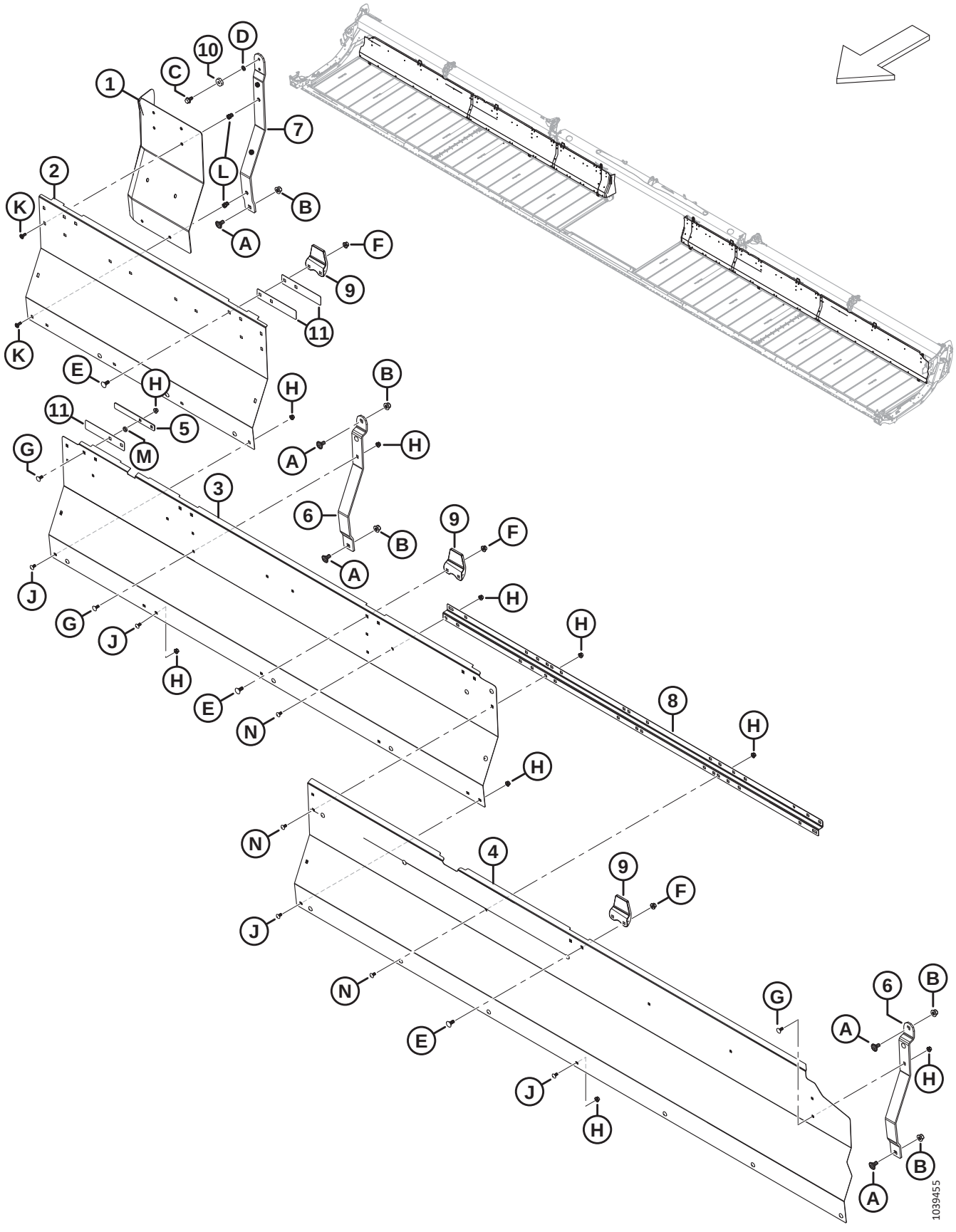

Ref	Part Number	Description	Qty	Serial Number
1	319222	EXTENSION – BACKSHEET LH	1	
	319223	EXTENSION – BACKSHEET RH	1	
2	275965	PANEL – BACKSHEET LH/RH INBOARD	2	
3	275676	PANEL – BACKSHEET LH/RH MIDDLE	2	
4	275319	PANEL – BACKSHEET 45 FT LH OUTER	1	
	275320	PANEL – BACKSHEET 45 FT RH OUTER	1	
	275286	PANEL – BACKSHEET 50 FT LH OUTER	1	
	275287	PANEL – BACKSHEET 50 FT RH OUTER	1	
5	319404	PLATE – RETAINER BACKSHEET	2	
6	275675	SUPPORT – DECK	4	
7	319366	SUPPORT – DECK FLEX INBOARD [40]	2	
8	360509	SUPPORT – BACKSHEET	2	
9	145840	GUIDE – BACKSHEET	6	
10	18867	BEARING – BALL CYL OD C/W TWO SEALS	2	
11	319403	PLATE – GUIDE BACKSHEET	6	
A	135903	BOLT – RHSN M12 X 1.75 X 25-8.8-ZINC		
B	136431	NUT – HEX FLG CTR LOC M12 X 1.75-10		
C	101897	SCREW – HEX WASH HD 3/8 NC X 3/4		
D	18637	WASHER – REG. LOCK 3/8 IN. NOM. I.D.		
E	135785	BOLT – RHSN M10 X 1.5 X 25-8.8-AA1J		
F	135799	NUT – HEX FLG CTR LOC M10 X 1.5-10		
G	197171	BOLT – RHSN M8 X 1.25 X 20-8.8-ZINC		
H	135337	NUT – HEX FLG CTR LK M8 X 1.25-8-AA1J		
J	191489	BOLT – RHSSN TFL M8 X 1.25 X 16-8.8-AA1J		
K	320290	SCREW – TORX TRUSS HD M8 X 1.25 X 25-SPCL-8.8-ZINC		
L	320181	RIVNUT – M8 X 1.25 HEX 3.8-7.9		
M	255930	WASHER – FLAT		
N	320190	SCREW – TORX TRUSS HD M8 X 1.25 X 20-SPCL-8.8-ZINC		

40. The kit includes inboard flex deck support assembly (NSS) and screw (MD #101897).

16 Draper – Tensioner

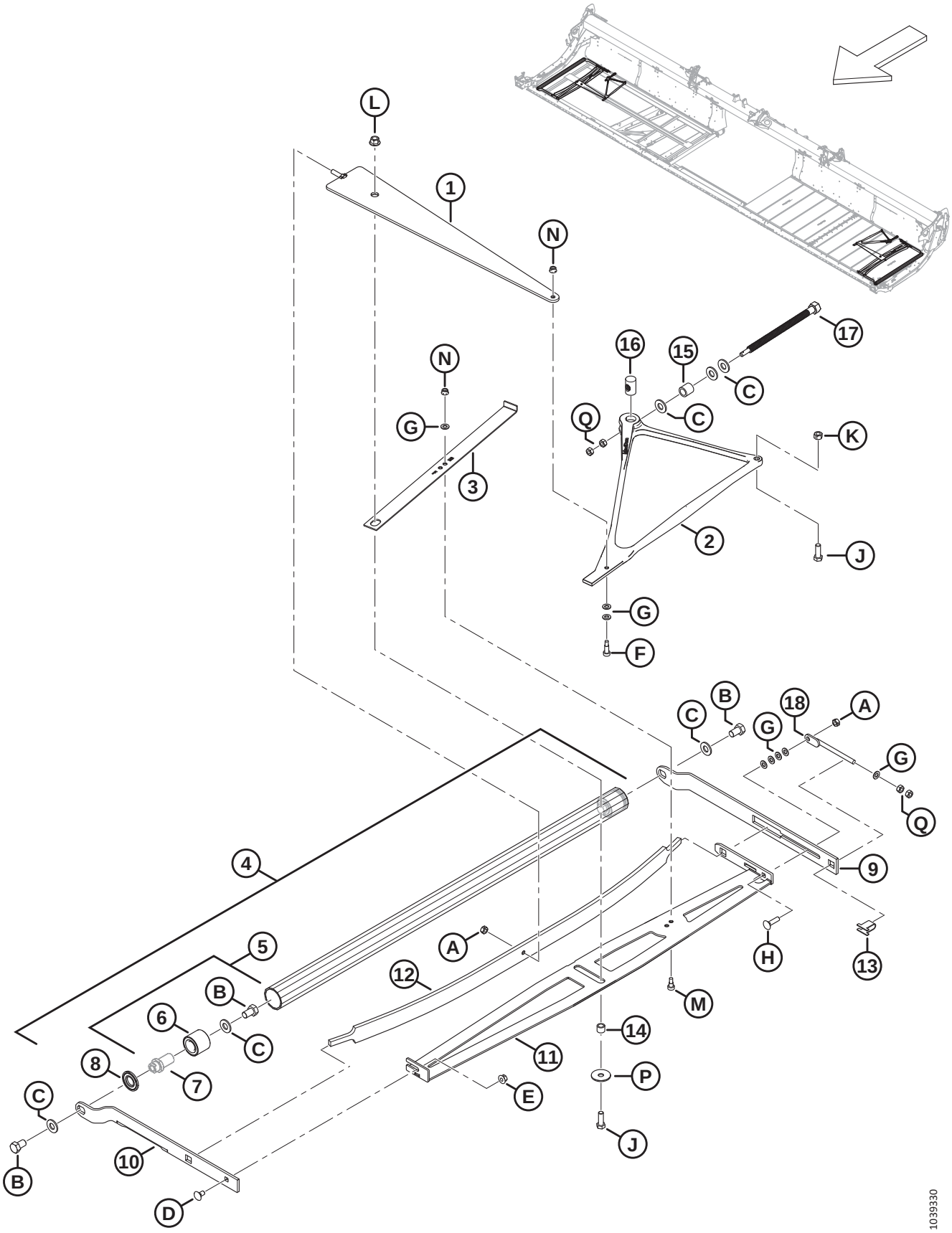

Ref	Part Number	Description	Qty	Serial Number
1	319051	MEMBER – COMPRESSION WELDT	2	
2	275902	CASTING – TENSIONER BELLCRANK	2	
3	275877	INDICATOR – TENSIONER	2	
4	275211	IDLER ROLLER ASSY SERVICE [41]	2	
5	165735	PIN ASSY – DRAPER ROLLER [42]	4	
6	132607	BEARING – DOUBLE ROW BALL 52 OD X 25 BORE	4	
7	NSS	PIN [43]		
8	120845	SEAL – NILOS LSTO STEEL DISK	4	
9	275324	ARM – IDLER ROLLER REAR	2	
10	319708	ARM – RH FRONT IDLER ROLLER	1	
	319707	ARM – LH FRONT IDLER ROLLER	1	
11	275375	MEMBER – RH STABILIZER WELDT	1	
	275348	MEMBER – LH STABILIZER WELDT	1	
12	227747	SPRING – LEAF	2	
13	275232	SUPPORT – ADJUSTER SCREW	2	
14	132531	SPACER	2	
15	227656	SPACER – TENSIONER BOLT	2	
16	275879	NUT – SPECIAL LEAD-SCREW	2	
17	320167	BOLT – HEX HD M16 X 4.0-SPCL-8.8-AA1J	2	
18	227914	BOLT – ADJUSTER WELDT	2	
A	320206	NUT – HEX CTR LOC M10 X 1.5-8-ZINC		
B	145249	BOLT – HEX HD TFL 5/8-18 X 1.0 GR5-AA1J		
C	30441	WASHER – HARDENED ASTM F436 5/8		
D	135785	BOLT – RHSN M10 X 1.5 X 25-8.8-AA1J		
E	135799	NUT – HEX FLG CTR LOC M10 X 1.5-10		
F	197275	SCREW – HEX SOC HD SHLDR M10 X 20		
G	184711	WASHER – FLAT REG M10-200HV-AA1J		
H	152732	BOLT – RHSN M10 X 1.5 X 40-8.8-AA1J		
J	152730	BOLT – HEX HD TFL M12 X 1.75 X 35-10.9-AA1J		
K	136759	NUT – HEX CTR LOC M12 X 1.75-8-AA1J		
L	136431	NUT – HEX FLG CTR LOC M12 X 1.75-10		
M	135894	SCREW – HEX SOC HD SHLDR M10		
N	135337	NUT – HEX FLG CTR LK M8 X 1.25-8-AA1J		
P	42592	WASHER – FLAT		
Q	30505	NUT – HEX M10 X 1.5-10-AA1J		

41. Includes two pin assemblies (MD #165735) and two seals (MD #120845).
42. Includes pin (NSS), bearing (MD #132607), and hardware (MD #30441, MD #145249).
43. Not sold separately; included in pin assembly (MD #165735).

17 Draper – Drive Roller

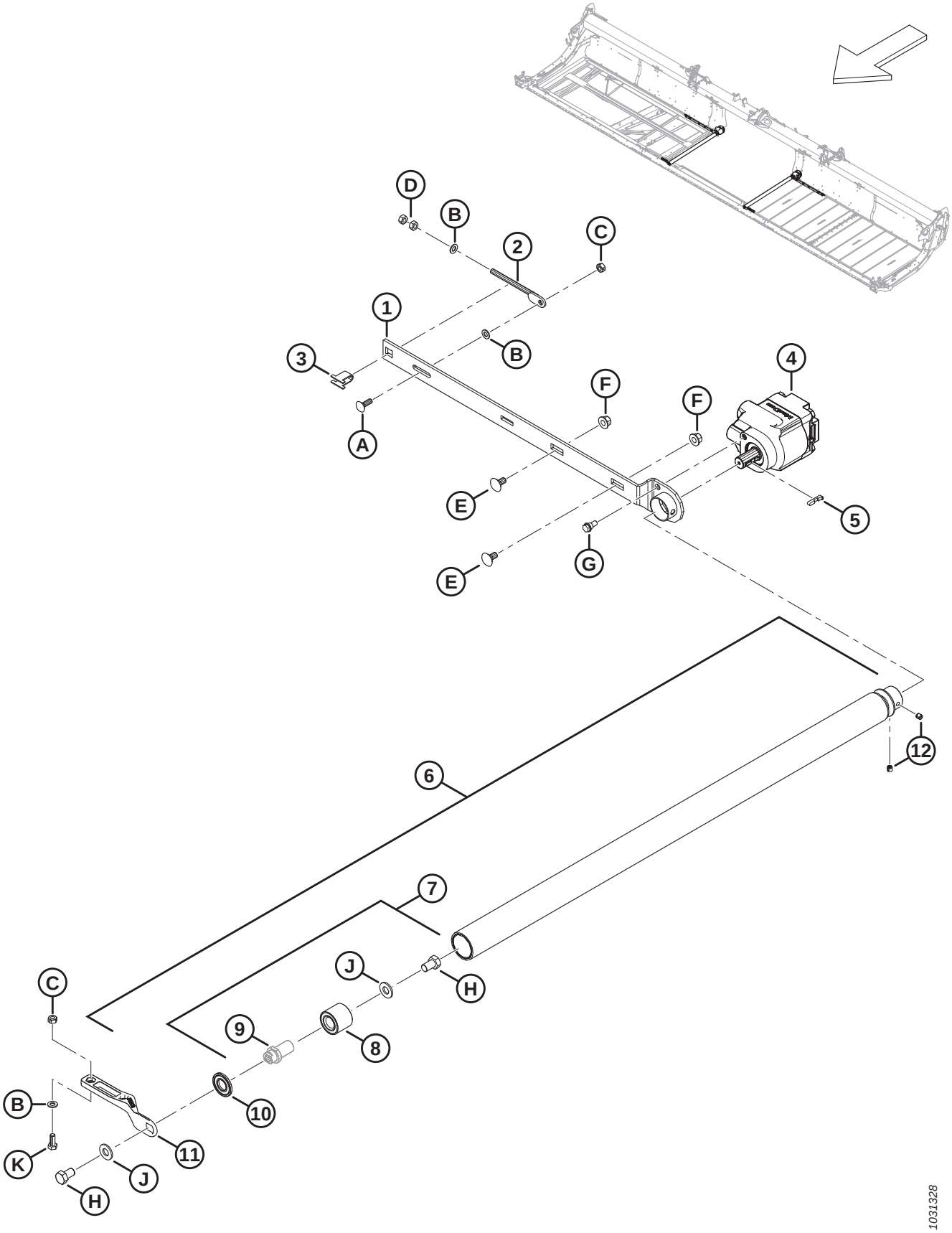

Ref	Part Number	Description	Qty	Serial Number
1	275332	ARM – DRIVE ROLLER WELDT	1	
2	227914	BOLT – ADJUSTER WELDT	1	
3	275232	SUPPORT – ADJUSTER SCREW	1	
4	275860	MOTOR – HYD GEAR DRAPER DRIVE	1	
	319583	SEAL KIT – DRAPER DRIVE MOTOR		
5	275864	KEY – DRAPER DRIVE MOTOR	1	
6	319191	DRIVE ROLLER ASSY SERVICE [44]	1	
7	165735	PIN ASSY – DRAPER ROLLER [45]	1	
8	132607	BEARING – DOUBLE ROW BALL 52 OD X 25 BORE	1	
9	NSS	PIN [46]		
10	120845	SEAL – NILOS LSTO STEEL DISK	1	
11	319265	CASTING – RH/LH FRONT DRIVE ARM	2	
12	320182	SCREW – SET SOC M10 X 1.5 X 10-8.8-BO	2	
A	184662	BOLT – RHSN TFL M10 X 1.5 X 30-8.8-AA1J		
B	184711	WASHER – FLAT REG M10-200HV-AA1J		
C	320206	NUT – HEX CTR LOC M10 X 1.5-8-ZINC		
D	30505	NUT – HEX M10 X 1.5-10-AA1J		
E	135903	BOLT – RHSN M12 X 1.75 X 25-8.8-ZINC		
F	136431	NUT – HEX FLG CTR LOC M12 X 1.75-10		
G	172259	BOLT – SHOULDER .375-16 UNC-AA1J		
H	145249	BOLT – HEX HD TFL 5/8-18 X 1.0 GR5-AA1J		
J	30441	WASHER – HARDENED ASTM F436 5/8		
K	184661	BOLT – HEX HD TFL M10 X 1.5 X 30-8.8-AA1J		

44. Includes vulcanized roller (NSS), pin assembly (MD #165735), seal (MD #120845), and two set screws (MD #320182).
45. Includes pin (NSS), bearing (MD #132607), and hardware (MD #30441, MD #145249).
46. Not sold separately; included in pin assembly (MD #165735).

18 Draper – Decks and Tracks (FD225)

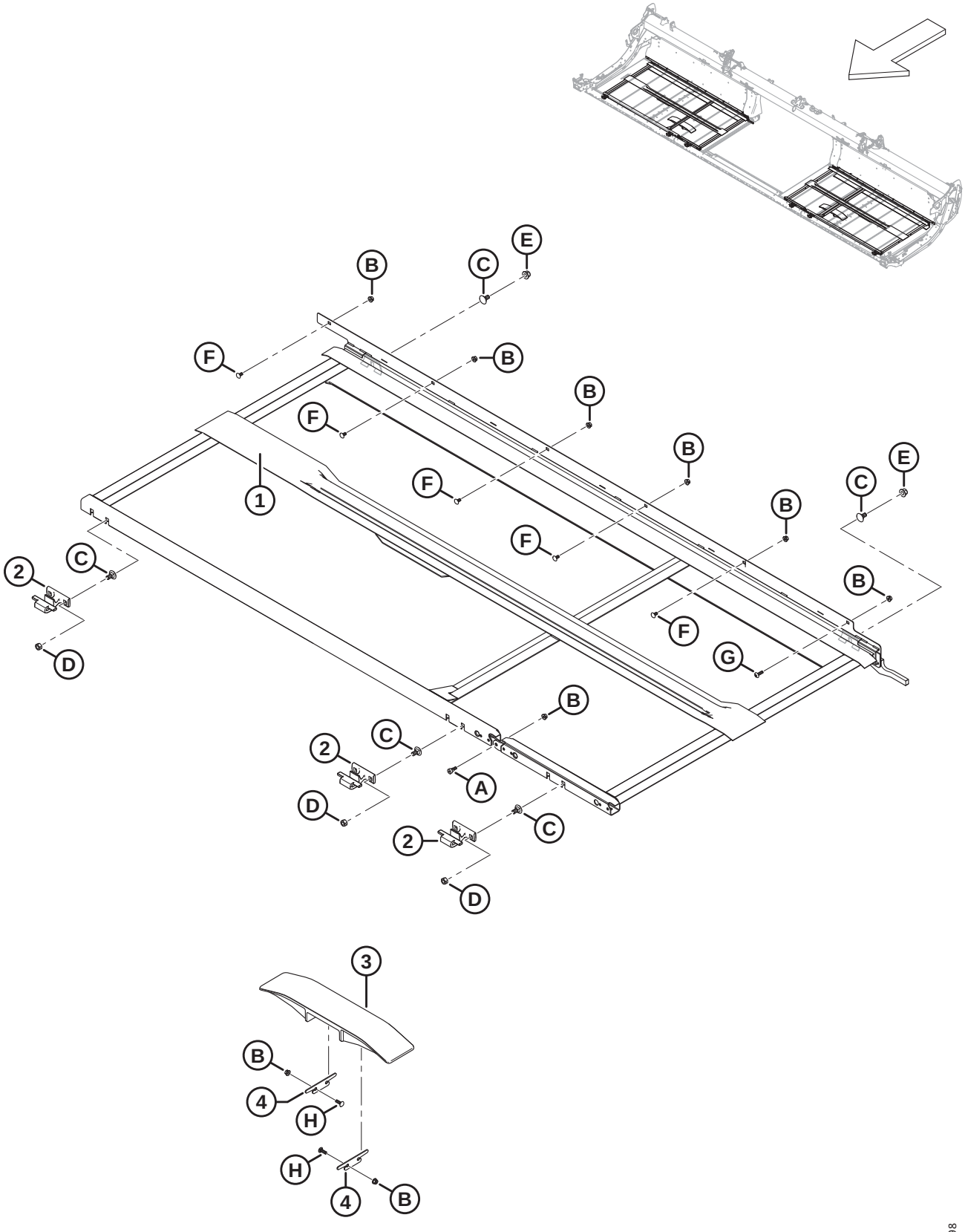

Ref	Part Number	Description	Qty	Serial Number
1	319588	DECK WELDT – 25 FT RH FLEX	1	
	319587	DECK WELDT – 25 FT LH FLEX	1	
2	319225	CASTING – DECK FRONT HOOK	6	
3	340841	TRACK – STANDARD PLASTIC	2	
4	340681	SHIM – DRAPER TRACK	4	
A	135894	SCREW – HEX SOC HD SHLDR M10		
B	135337	NUT – HEX FLG CTR LK M8 X 1.25-8-AA1J		
C	135903	BOLT – RHSN M12 X 1.75 X 25-8.8-ZINC		
D	136759	NUT – HEX CTR LOC M12 X 1.75-8-AA1J		
E	136431	NUT – HEX FLG CTR LOC M12 X 1.75-10		
F	191489	BOLT – RHSSN TFL M8 X 1.25 X 16-8.8-AA1J		
G	320290	SCREW – TORX TRUSS HD M8 X 1.25 X 25-SPCL-8.8-ZINC		
H	136824	BOLT – RHSSN M8 X 1.25 X 25-8.8-AA1J		

19 Draper – Decks and Tracks (FD230, FD235, FD240, and FD241)

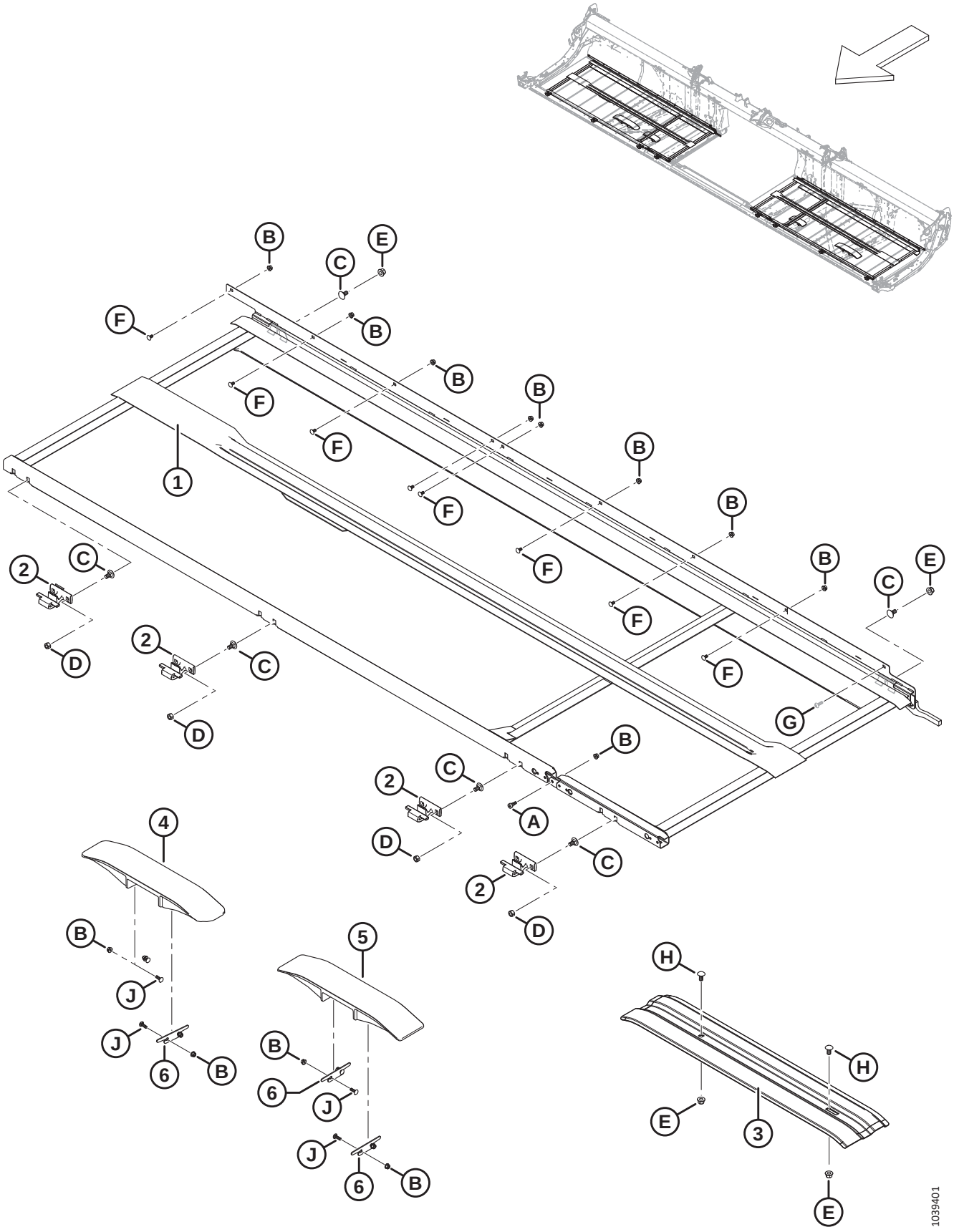

Ref	Part Number	Description	Qty	Serial Number
1	275266	DECK WELDT – 30 FT RH FLEX	1	
	275265	DECK WELDT – 30 FT LH FLEX	1	
	275505	DECK WELDT – 35 FT RH FLEX	1	
	275504	DECK WELDT – 35 FT LH FLEX	1	
	275199	DECK WELDT – 40 FT RH FLEX	1	
	275200	DECK WELDT – 40 FT LH FLEX	1	
	275514	DECK WELDT – 41 FT RH FLEX	1	
	275513	DECK WELDT – 41 FT LH FLEX	1	
2	319225	CASTING – DECK FRONT HOOK [47]		
3	319376	SUPPORT – LOWER DRAPER TRACK (LH FD230, FD235 ONLY) [48]	A/R	–451189
	319378	SUPPORT – LOWER DRAPER TRACK (LH FD240, FD241 ONLY) [48]	A/R	–451189
	319228	SUPPORT – LOWER DRAPER TRACK (RH FD230 ONLY) [48]	A/R	–451189
	319377	SUPPORT – LOWER DRAPER TRACK (RH FD235, FD240, FD241 ONLY) [48]	A/R	–451189
4	360151	TRACK – ANGLED PLASTIC	1	451190–
5	340841	TRACK – STANDARD PLASTIC [49]		451190–
	360150	TRACK – SHORT PLASTIC (FD230 ONLY) [50]		451190–
6	340681	SHIM – DRAPER TRACK	6	451190–
A	135894	SCREW – HEX SOC HD SHLDR M10		
B	135337	NUT – HEX FLG CTR LK M8 X 1.25-8-AA1J		
C	135903	BOLT – RHSN M12 X 1.75 X 25-8.8-ZINC		
D	136759	NUT – HEX CTR LOC M12 X 1.75-8-AA1J		
E	136431	NUT – HEX FLG CTR LOC M12 X 1.75-10		
F	191489	BOLT – RHSSN TFL M8 X 1.25 X 16-8.8-AA1J		
G	320290	SCREW – TORX TRUSS HD M8 X 1.25 X 25-SPCL-8.8-ZINC		
H	152439	BOLT – RHSSN M12 X 1.75 X 25-8.8-AA1J		
J	136824	BOLT – RHSSN M8 X 1.25 X 25-8.8-AA1J		

47. Quantities: FD230 = 8, FD235 = 10, FD240 = 10, and FD241 = 10.
48. Service part only for model year 2022 and prior headers.
49. Quantities: FD230 = 1, FD235 = 3, FD240 = 3, and FD241 = 3.
50. Short plastic tracks are used on the inboard header frame legs for FD230 headers only. Quantities: FD230 = 2.

20 Draper – Decks and Tracks (FD245 and FD250)

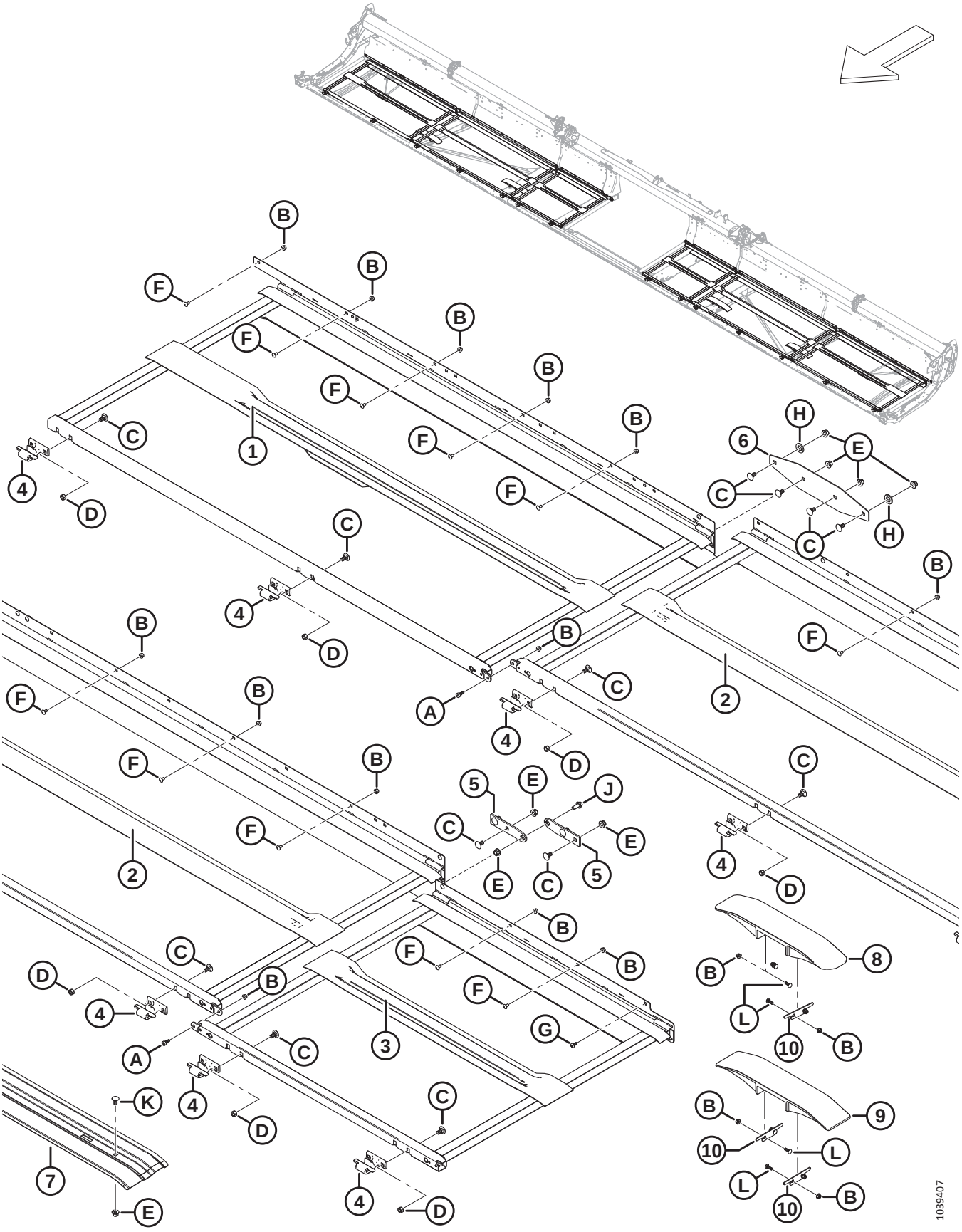

Ref	Part Number	Description	Qty	Serial Number
1	275770	DECK WELDT – RH OUTBOARD	1	
	275960	DECK WELDT – LH OUTBOARD	1	
2	275779	DECK WELDT – 45 FT MIDDLE	2	
	275954	DECK WELDT – 50 FT MIDDLE	2	
3	275641	DECK WELDT – RH INBOARD	1	
	275640	DECK WELDT – LH INBOARD	1	
4	319225	CASTING – DECK FRONT HOOK	14	
5	275688	HINGE – WIDE FRAME DECK	4	
6	275690	PLATE – DECK FRAME JOINT	2	
7	319377	SUPPORT – DRAPER TRACK (RH FD245) [51]	A/R	–451189
	319378	SUPPORT – DRAPER TRACK (LH FD245) [52]	A/R	–451189
	319287	SUPPORT – DRAPER TRACK (FD250) [53]	A/R	–451189
8	360151	TRACK – ANGLED PLASTIC	1	451190–
9	340841	TRACK – STANDARD PLASTIC	3	451190–
10	340681	SHIM – DRAPER TRACK	6	451190–
A	135894	SCREW – HEX SOC HD SHLDR M10		
B	135337	NUT – HEX FLG CTR LK M8 X 1.25-8-AA1J		
C	135903	BOLT – RHSN M12 X 1.75 X 25-8.8-ZINC		
D	136759	NUT – HEX CTR LOC M12 X 1.75-8-AA1J		
E	136431	NUT – HEX FLG CTR LOC M12 X 1.75-10		
F	191489	BOLT – RHSSN TFL M8 X 1.25 X 16-8.8-AA1J		
G	320290	SCREW – TORX TRUSS HD M8 X 1.25 X 25-SPCL-8.8-ZINC		
H	112130	WASHER – HARD ASTM F4363/4 IN. NOM. ID AB0C		
J	148798	BOLT – HEX FLG HD M12 X 1.75 X 30-10.9-AA1J		
K	152439	BOLT – RHSSN M12 X 1.75 X 25-8.8-AA1J		
L	136824	BOLT – RHSSN M8 X 1.25 X 25-8.8-AA1J		

51. RH draper track support for model year 2022 and prior FD245 headers.
52. LH draper track support for model year 2022 and prior FD245 headers.
53. RH and LH draper track support for model year 2022 and prior FD250 headers.

21 Draper – Seals (FD225)

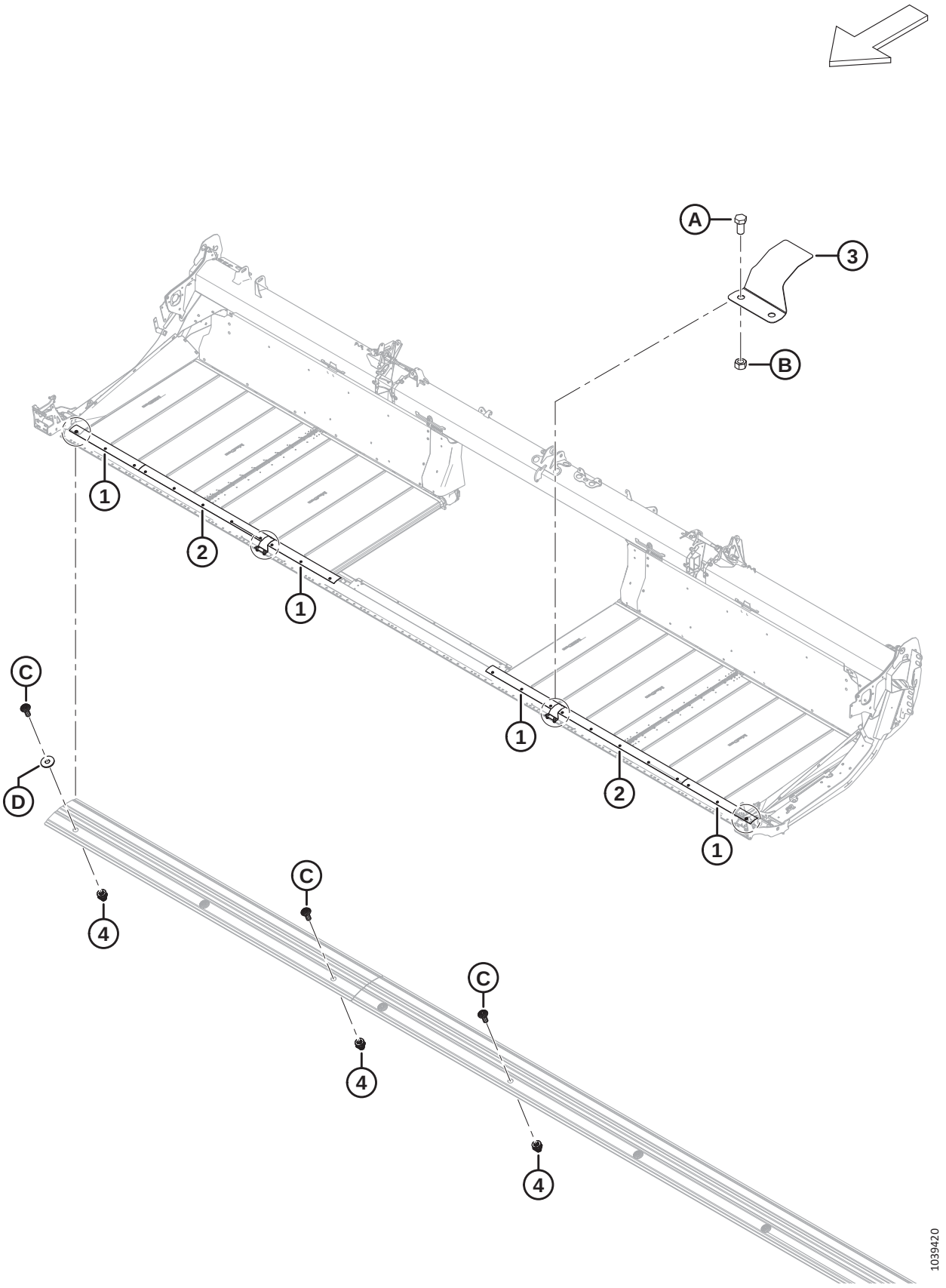

DRAPER – SEALS (FD225)

Ref	Part Number	Description	Qty	Serial Number
1	319231	PLATE – CUTTERBAR SEAL	2	
2	319229	PLATE – CUTTERBAR SEAL	4	
3	319180	COVER – CUTTERBAR HINGE	2	
4	320448	RIVNUT – M8 X 1.25 HEX	22	
A	50155	BOLT – HEX HD TFL M12 X 1.75 X 25-8.8-AA1J		
B	184694	NUT – HEX M12 X 1.75-8-AA1J		
C	320190	SCREW – TORX TRUSS HD M8 X 1.25 X 20-SPCL-8.8-ZINC		
D	184709	WASHER – FLAT LARGE M8-200HV		

22 Draper – Seals (FD230, FD235, and FD240)

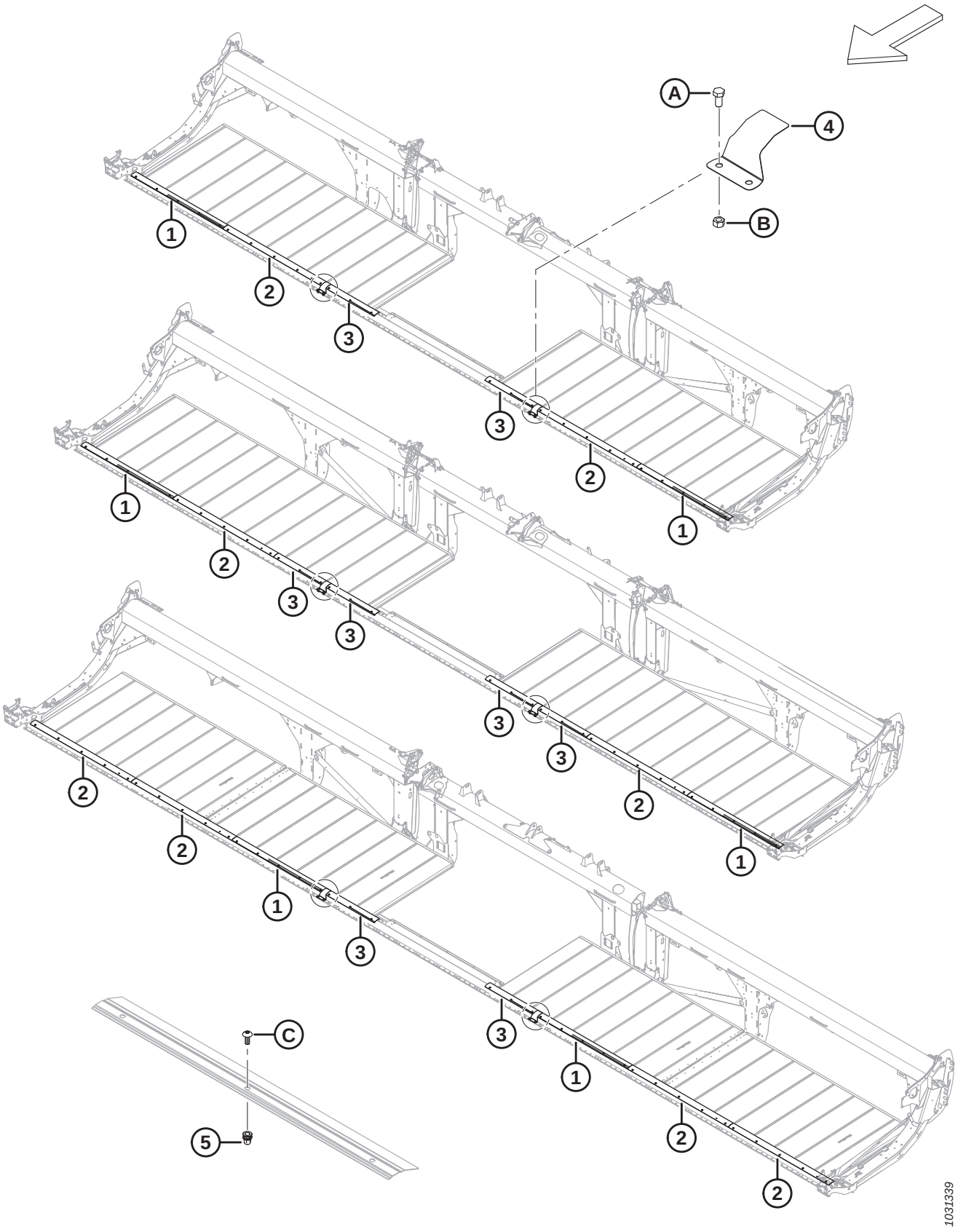

Ref	Part Number	Description	Qty	Serial Number
1	319231	PLATE – CUTTERBAR SEAL [54]		
2	319230	PLATE – CUTTERBAR SEAL [55]		
3	319229	PLATE – CUTTERBAR SEAL [56]		
4	319180	COVER – CUTTERBAR HINGE	2	
5	320448	RIVNUT – M8 X 1.25 HEX [57]		
A	50155	BOLT – HEX HD TFL M12 X 1.75 X 25-8.8-AA1J		
B	184694	NUT – HEX M12 X 1.75-8-AA1J		
C	320190	SCREW – TORX TRUSS HD M8 X 1.25 X 20-SPCL-8.8-ZINC		

54. Quantities: FD230 = 2, FD235 = 2, and FD240 = 2.
55. Quantities: FD230 = 2, FD235 = 2, and FD240 = 4.
56. Quantities: FD230 = 2, FD235 = 4, and FD240 = 2.
57. Quantities: FD230 = 26, FD235 = 32, and FD240 = 36.

23 Draper – Seals (FD241, FD245, and FD250)

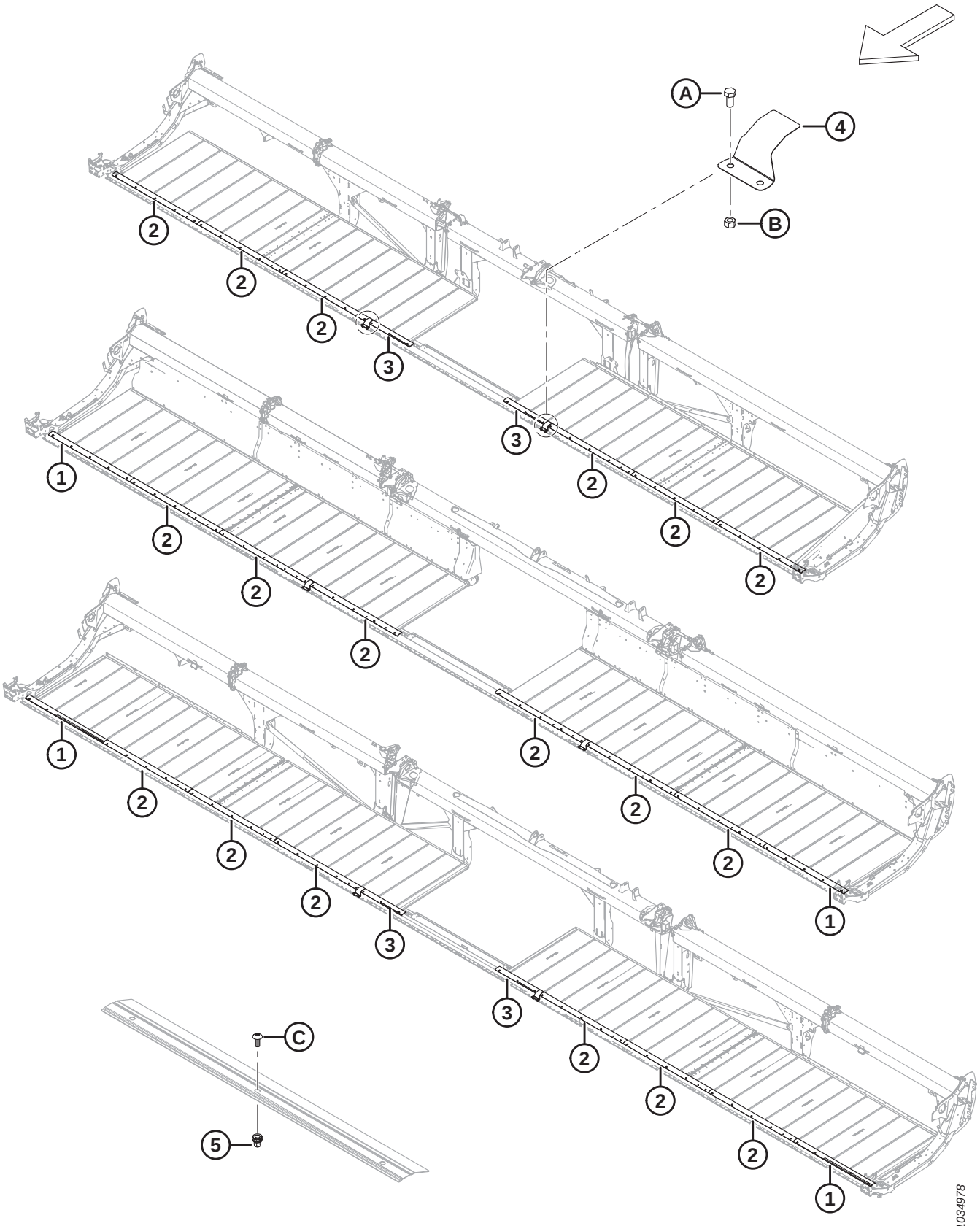

Ref	Part Number	Description	Qty	Serial Number
1	319231	PLATE – CUTTERBAR SEAL [58]		
2	319230	PLATE – CUTTERBAR SEAL [59]		
3	319229	PLATE – CUTTERBAR SEAL [60]		
4	319180	COVER – CUTTERBAR HINGE	2	
5	320448	RIVNUT – M8 X 1.25 HEX [61]		
A	50155	BOLT – HEX HD TFL M12 X 1.75 X 25-8.8-AA1J		
B	184694	NUT – HEX M12 X 1.75-8-AA1J		
C	320190	SCREW – TORX TRUSS HD M8 X 1.25 X 20-SPCL-8.8-ZINC		

58. Quantities: FD241 = 0, FD245 = 2, and FD250 = 2.
59. Quantities: FD241 = 6, FD245 = 6, and FD250 = 6.
60. Quantities: FD241 = 2, FD245 = 0, and FD250 = 2.
61. Quantities: FD241 = 36, FD245 = 40, and FD250 = 46.

24 Draper Deflectors – Narrow

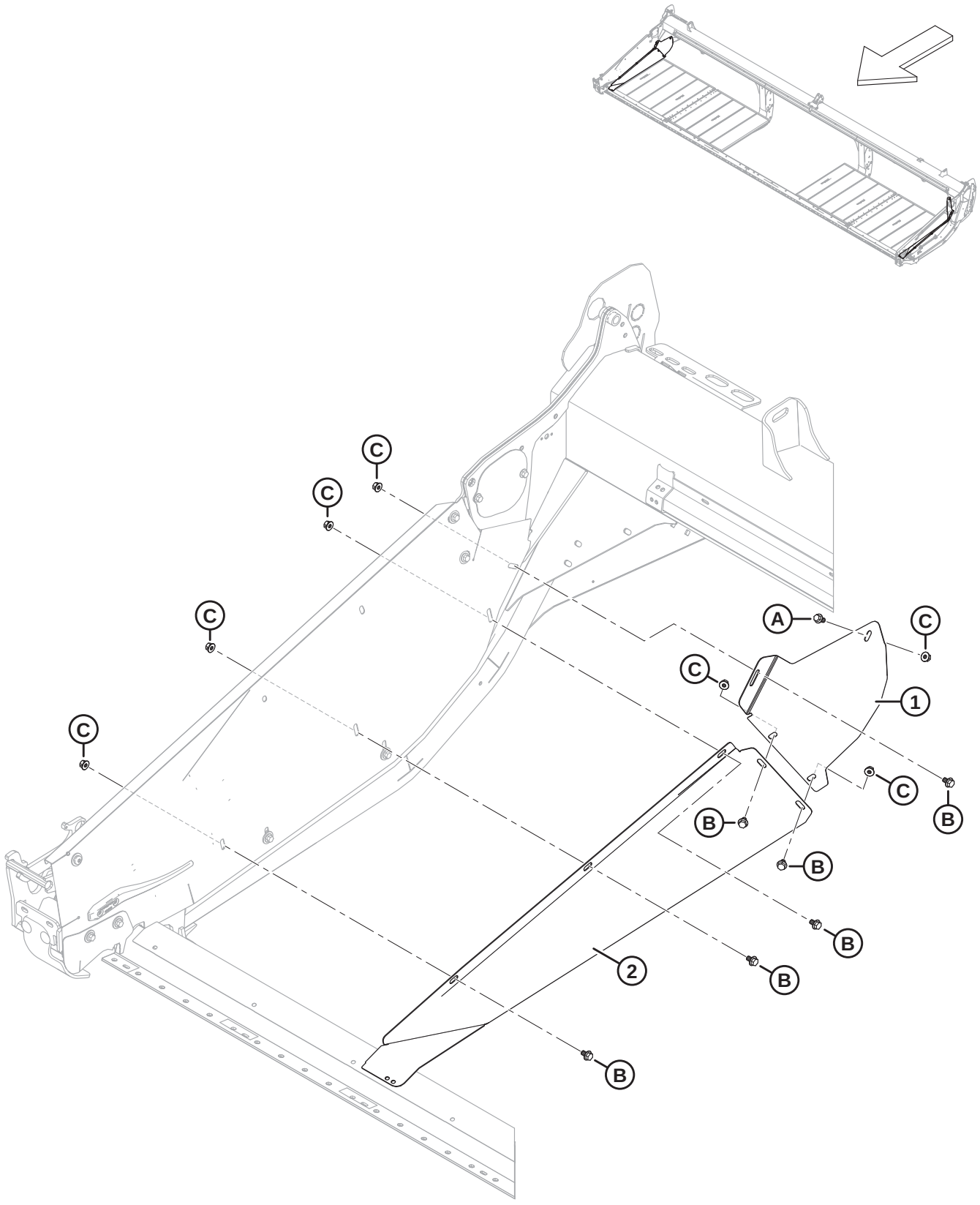

DRAPER DEFLECTORS – NARROW

Ref	Part Number	Description	Qty	Serial Number
1	289357	DEFLECTOR – RH NARROW REAR **(2023 AND PRIOR)** [62]	1	**–486189**
	289347	DEFLECTOR – LH NARROW REAR **(2023 AND PRIOR)** [62]	1	**–486189**
	360755	**DEFLECTOR – RH NARROW REAR (2024 AND LATER)** [63]	**1**	**486190–**
	360754	**DEFLECTOR – LH NARROW REAR (2024 AND LATER)** [63]	**1**	**486190–**
2	289356	DEFLECTOR – RH NARROW FRONT **(2023 AND PRIOR)** [62]	1	**–486189**
	289346	DEFLECTOR – LH NARROW FRONT **(2023 AND PRIOR)** [62]	1	**–486189**
	360521	**DEFLECTOR – RH NARROW FRONT (2024 AND LATER)** [63]	**1**	**486190–**
	360520	**DEFLECTOR – LH NARROW FRONT (2024 AND LATER)** [63]	**1**	**486190–**
A	152655	BOLT – HEX FLG HD M10 X 1.5 X 20-8.8-AA1J		
B	136151	BOLT – HEX FLG HD TFL M10 X 1.5 X 16-8.8-AA1J		
C	135799	NUT – HEX FLG CTR LOC M10 X 1.5-10		

62. Service part only for model year 2023 and prior headers.
63. Service part only for model year 2024 and later headers.

25 Balance Linkage

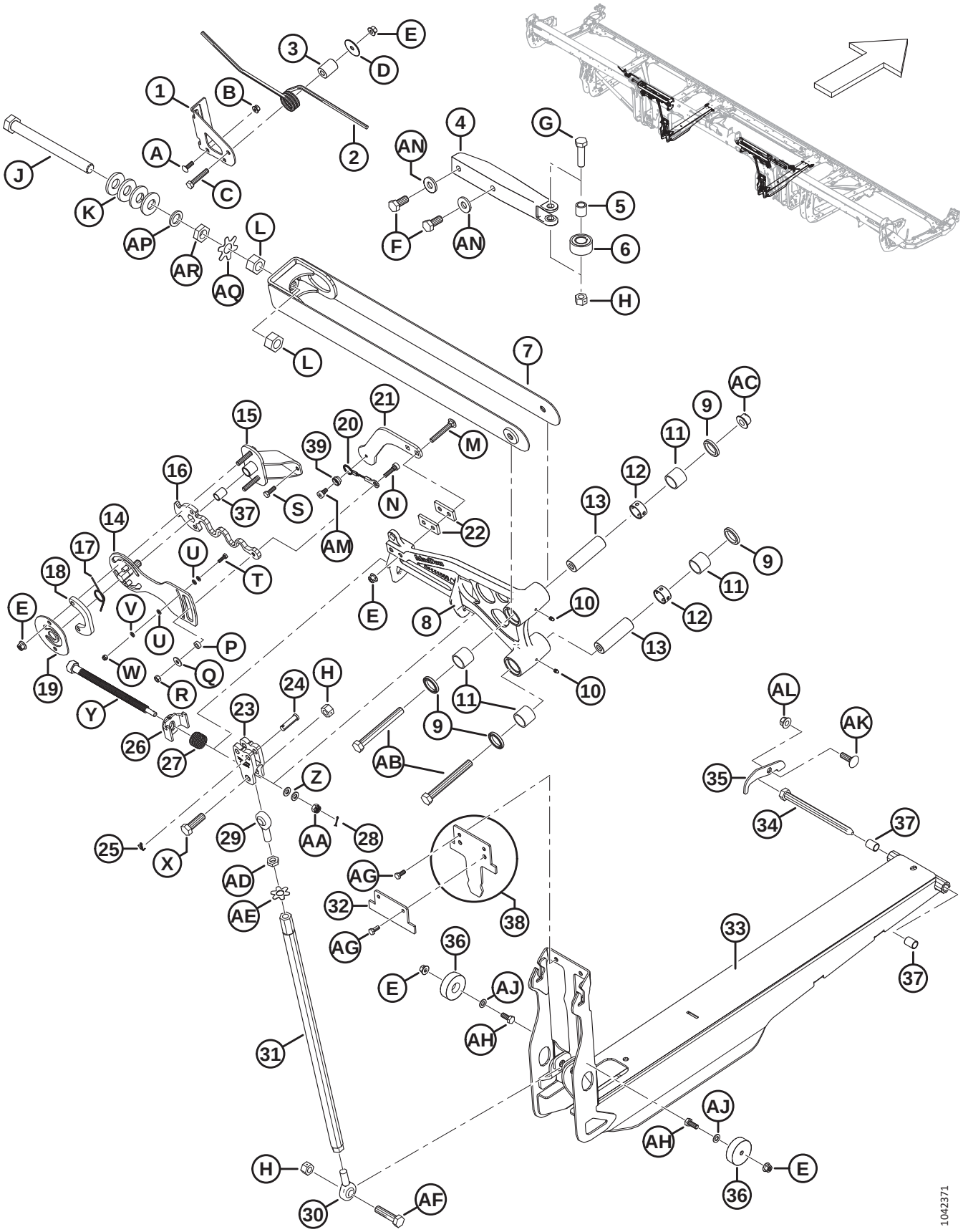

BALANCE LINKAGE

Ref	Part Number	Description	Qty	Serial Number
1	258740	BRACKET – BOLT ON WING LOCK	2	
2	258582	SPRING – WING LOCK	2	
3	258585	SPACER – WING LOCK	2	
4	258627	CASTING – WING STABILIZER MACH	2	
5	229340	BUSHING – WING STABILIZER	2	
6	258041	BEARING – CAM FOLLOWER	2	
7	319508	SUPPORT – TOP LINK WELDT (FD225–FD241) [64]	2	
	258346	SUPPORT – TOP LINK WELDT (FD230–FD241) [65]	2	
	319509	SUPPORT – WIDE TOP LINK WELDT (FD245–FD250) [66]	2	
	258399	SUPPORT – WIDE TOP LINK WELDT (FD245–FD250) [67]	2	
8	335851	BELLCRANK – 25 FT SUB ASSY [68]	2	
	258850	BELLCRANK – 30 FT SUB ASSY [68]	2	
	258849	BELLCRANK – 35 FT SUB ASSY [68]	2	
	258829	BELLCRANK – 40 FT DR SUB ASSY [68]	2	
	258831	BELLCRANK – LH 41 FT SUB ASSY [68]	1	
	258829	BELLCRANK – RH 41 FT SUB ASSY [68]	1	
	258953	BELLCRANK – 40 FT TR SUB ASSY [68]	2	
	258963	BELLCRANK – LH 45 FT SUB ASSY [68]	1	
	258969	BELLCRANK – RH 45 FT SUB ASSY [68]	1	
	258901	BELLCRANK – 50 FT SUB ASSY [68]	**2**	
9	113222	SEAL	8	
10	18671	FITTING – LUBE 1/4 - 28 UNF	4	
11	100500	BEARING – NEEDLE	8	
12	258481	SPACER – BELL CRANK	4	
13	258298	PIN – BELL CRANK	4	
14	258815	PLATE WELDT – FLEX CHECKER	2	
15	258757	ASSY – FLEX CHECKER PIVOT [69]	2	
16	258817	SPRING – FLEX CHECKER	2	
17	258940	SPRING – FLEX ADJUSTER	2	
18	258823	PLATE – FLEX CHECKER SPACER	2	
19	258822	PLATE – FLEX CHECKER RETAINER	2	
20	258986	CABLE – FLEX CHECKER	2	
21	258622	BRACKET – FLEX MEASUREMENT	2	
22	340897	PLATE – FLEX CHECKER SPACER	4	
23	258384	CLEVIS – MACHINED FLEX ADJUSTER	2	
24	184977	PIN – CLEVIS 1/2 IN X 1 3/4 IN ZP	4	
25	18605	PIN – COTTER 1/8 DIA X 1 ZP	4	
26	258761	WELDT – FLEX ADJUSTMENT LOCK	2	

64. For FD225, and model year 2022 and later FD230–FD241 headers only.
65. For model year 2021 and prior FD230–FD241 headers only.
66. For model year 2022 and later FD245–FD250 headers only.
67. For model year 2021 and prior FD245–FD250 headers only.
68. Includes four seals (MD #113222), two lube fittings (MD #18671), four needle bearings (MD #100500), and two bell crank spacers (MD #258481).
69. Includes bushing (MD #258391).

BALANCE LINKAGE

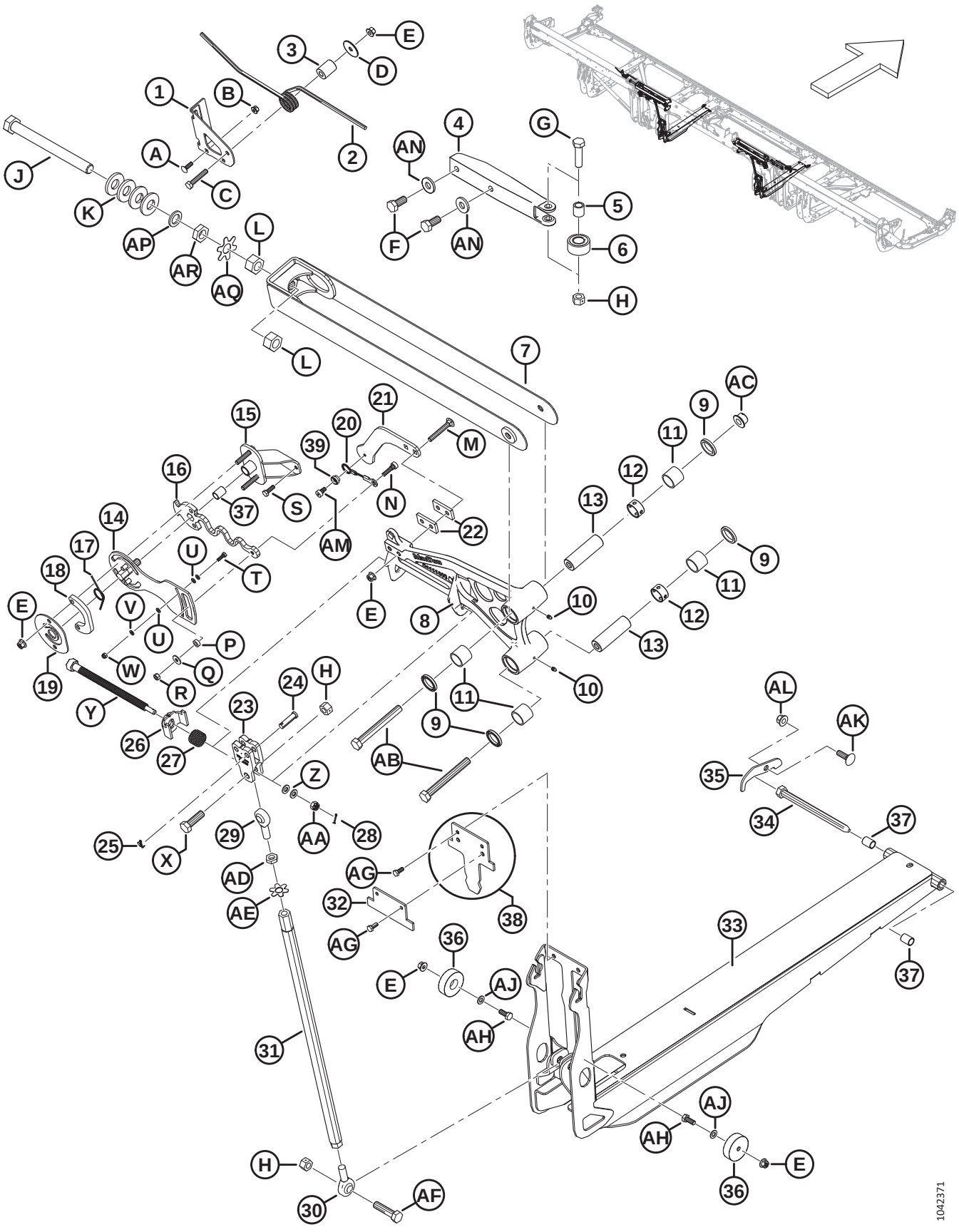

BALANCE LINKAGE

Ref	Part Number	Description	Qty	Serial Number
27	258373	SPRING – BELL CRANK LOCK	2	
28	18604	PIN – COTTER 3/32 DIA X 3/4 ZP	2	
29	320109	ROD END – LINK, RH THREAD	2	
30	320110	ROD END – LINK, LH THREAD	2	
31	319474	TUBE WELDT – COMPRESSION LINK	2	
32	340672	PLATE – 25 FT BALANCE CHAN STOP [70]	2	
	258601	PLATE – FLEX FROWN LIMITER [71]	2	
33	319542	BALANCE CHANNEL – C/W BUSHINGS	2	
34	174418	PIN – HEX HD 5/8 X 8.5 LG-AA1J	2	
35	330622	PLATE – FLEX PIN KEEPER	2	
36	258791	GUIDE – PLASTIC	4	
37	258391	BUSHING	6	
38	258990	STOP – 30 FT FLEX LIMITER W/ DECAL (FD230 ONLY) [72]	2	
	258989	DECAL – BALANCE CHANNEL		
39	258980	LOCK – FLEX CHECKING CABLE	2	
A	136824	BOLT – RHSSN M8 X 1.25 X 25-8.8-AA1J		
B	135337	NUT – HEX FLG CTR LK M8 X 1.25-8-AA1J		
C	152193	BOLT – HEX HD M10 X 1.5 X 55 X 8.8-AA1J		
D	258586	WASHER		
E	135799	NUT – HEX FLG CTR LOC M10 X 1.5-10		
F	136137	BOLT – HEX HD TFL M16 X 2 X 35-8.8-AA1J		
G	136141	BOLT – HEX HD M16 X 2 X 60-8.8-AA1J		
H	136476	NUT – HEX CTR LOC M16 X 2-8		
J	320108	BOLT – HEX HD FINE M24 X 1.5 X 250-SPCL-10.9-AA1J		
K	320236	WASHER – CONICAL SPRING, M24-FLAKE		
L	136512	NUT – HEX FINE M24 X 1.5-8-AA1J [73]		
	320486	NUT – HEX FINE M24 X 1.5-10-ZINC [73]		
M	136495	BOLT – RHSN M10 X 1.5 X 70-8.8-AA1J		
N	320160	SCREW – HEX SOC HD SHLDR M10 X 7-M8 X 1.25 X 27-SPCL		
P	258846	WASHER		
Q	184709	WASHER – FLAT LARGE M8-200HV		
R	30856	NUT – HEX M8 X 1.25-9-AA1J		
S	136057	BOLT – HEX HD TFL M8 X 1.25 X 25-10.9-AA1J		
T	184646	BOLT – HEX HD TFL M6 X 1 X 20-8.8-AA1J		
U	184705	WASHER – FLAT M6-200HV-AA1J		
V	30631	WASHER – LOCK SPRING M6		
W	184685	NUT – HEX NYLOC M6 X 1-8-AA1J		
X	184681	BOLT – HEX HD M16 X 2 X 50-8.8-AA1J		

70. Plate attaches directly to balance channel (MD #319542) on FD225 headers only.
71. Plate attaches directly to balance channel (MD #319542) on FD230, FD235, and FD241 headers. Plate does not exist for triple-reel FD240, FD245, and FD250 headers.
72. Stop is only present on FD230 headers.
73. FD225 requires two Class 8 nuts (MD #136512), one per top-link; FD230–FD250 requires four Class 10 nuts (MD #320486), two per top-link.

BALANCE LINKAGE

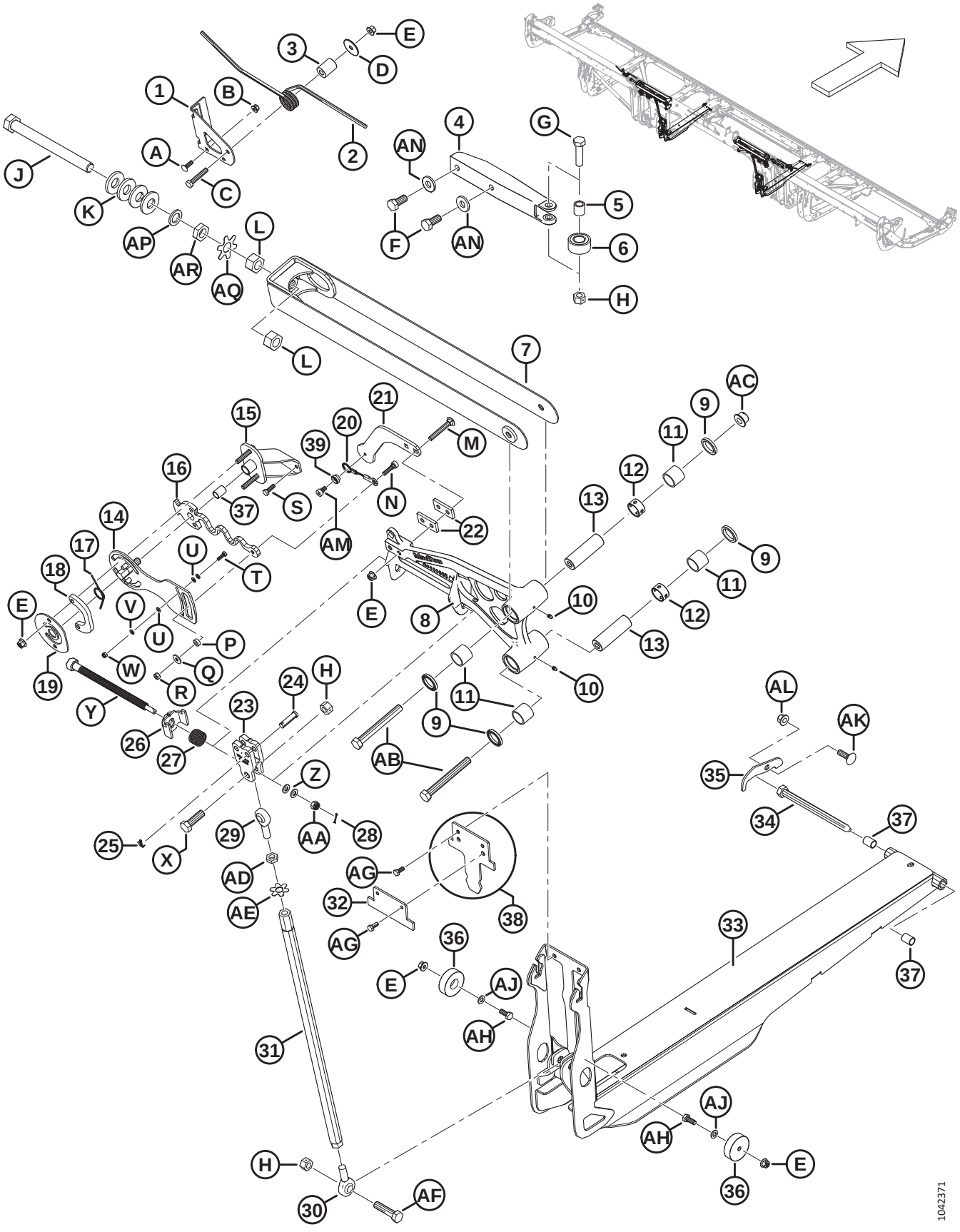

BALANCE LINKAGE

Ref	Part Number	Description	Qty	Serial Number
Y	320167	BOLT – HEX HD M16 X 4.0-SPCL-8.8-AA1J		
Z	30655	WASHER – HARD M10-340HV-AB0C		
AA	258758	NUT – HEX SLOTTED M10 X 1.5-8-AA1J		
AB	184677	BOLT – HEX HD M16 X 2 X 140-8.8-AA1J		
AC	152520	NUT – HEX FLG TECH LK M16 X 2-10-AA1J		
AD	136473	NUT – HEX THIN M16 X 2-05-AA1J		
AE	229064	WASHER – M16 TAB		
AF	320199	BOLT – HEX HD M16 X 2 X 65-8.8-ZINC		
AG	30715	BOLT – HEX HD TFL M8 X 1.25 X 20-8.8-AA1J		
AH	30627	BOLT – HEX HD TFL M10 X 1.5 X 25-8.8-A3L		
AJ	184711	WASHER – FLAT REG M10-200HV-AA1J		
AK	135900	BOLT – RHSN TFL M12 X 1.75 X 40-8.8-ZINC		
AL	136431	NUT – HEX FLG CTR LOC M12 X 1.75-10		
AM	320161	SCREW – HEX SOC HD SHLDR M10 X 7-M8 X 1.25 X 9-SPCL		
AN	22072	WASHER – FLAT		
AP	320251	WASHER – FLAT, M24-ZINC		
AQ	360835	PLATE – WASHER TAB M24 NUT		
AR	136513	NUT – HEX THIN FINE M24 X 1.5-8-AA1J		

26 Flex Linkage Shield – Backtube Hinge

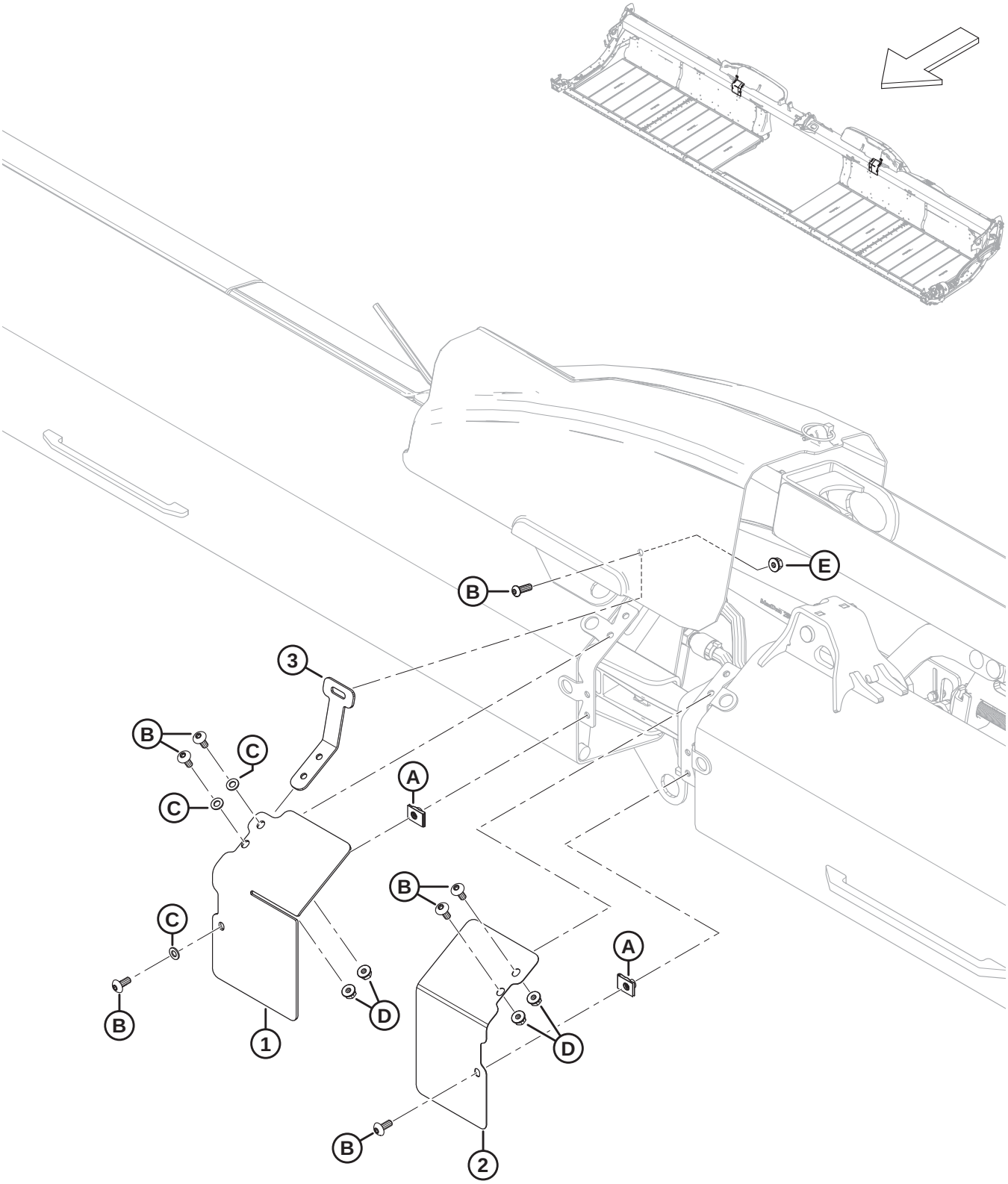

FLEX LINKAGE SHIELD – BACKTUBE HINGE

Ref	Part Number	Description	Qty	Serial Number
1	323086	SHIELD – FRONT TRANSITION, RH WING	1	
	323082	SHIELD – FRONT TRANSITION, LH WING	1	
2	323087	SHIELD – FRONT TRANSITION, RH WING	1	
	323083	SHIELD – FRONT TRANSITION, LH WING	1	
3	258837	BRACKET – FLEX WING SHIELD	2	
A	252839	NUT – CLIP ON M8		
B	320190	SCREW – TORX TRUSS HD M8 X 1.25 X 20-SPCL-8.8-ZINC		
C	184708	WASHER – FLAT M8-200HV-AA1J		
D	135337	NUT – HEX FLG CTR LK M8 X 1.25-8-AA1J		
E	135337	NUT – HEX FLG CTR LK M8 X 1.25-8-AA1J		

27 Flex Linkage Shield – Single Reel (FD225) and Double Reel (FD230, FD235, FD240, and FD241)

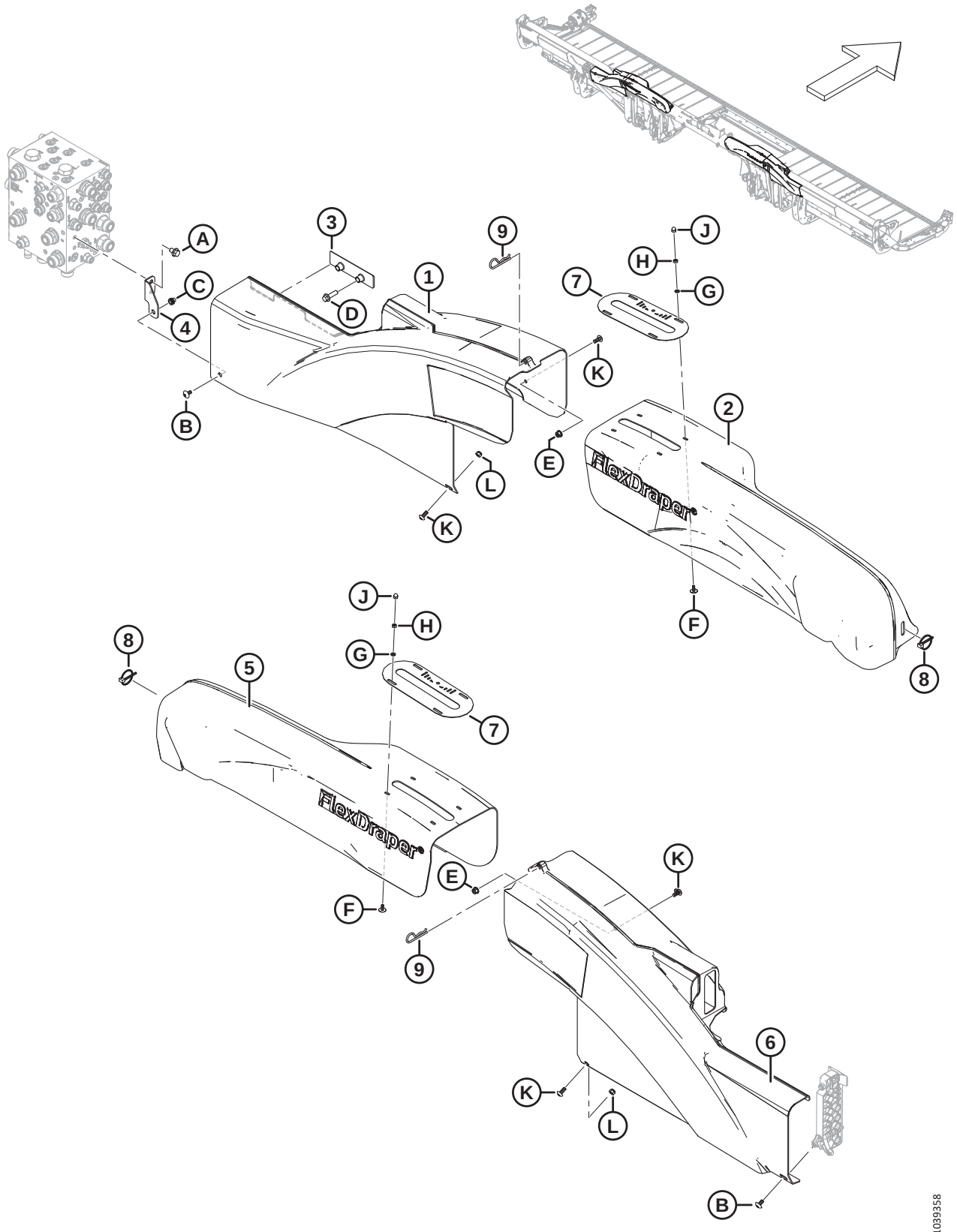

Ref	Part Number	Description	Qty	Serial Number
1	323032	SHIELD – LH WING	1	
2	258997	SHIELD – LH NF DR BELLCRANK	1	
3	283849	BRACKET – HYD COVER SUPPORT	1	
4	323773	ASSY – RH SHIELD BRACKET [74]	1	
5	258998	SHIELD – RH NF DR BELLCRANK	1	
6	323051	SHIELD – RH WING	1	
7	360299	GAUGE – FLEX POSITION	2	
8	102264	PIN – LYNCH 3/16 X 1 9/16 IN.	2	
9	13125	PIN – HAIR	2	
A	136151	BOLT – HEX FLG HD TFL M10 X 1.5 X 16-8.8-AA1J		
B	320336	SCREW – TORX TRUSS HD M8 X 1.25 X 16-SPCL-8.8-AA1T		
C	320448	RIVNUT – M8 X 1.25 HEX		
D	136211	BOLT – HEX FLG HD M10 X 1.5 X 35-8.8-AA1J		
E	135337	NUT – HEX FLG CTR LK M8 X 1.25-8-AA1J		
F	320148	SCREW – TRUSS SLT HD M6 X 1.0 X 16-SPCL-8.8-ZINC		
G	184705	WASHER – FLAT M6-200HV-AA1J		
H	184683	NUT – HEX ISO 4032 M6 X 1-8-ZINC		
J	320246	NUT – ACORN M6 X 1.0-8-ZINC		
K	320190	SCREW – TORX TRUSS HD M8 X 1.25 X 20-SPCL-8.8-ZINC		
L	184688	NUT – HEX NYLOC M8 X 1.25-8-AA1J		

74. The assembly includes RH shield mounting bracket (NSS) and rivnut (MD #320448). Model year 2022 and prior machines with superseded bracket (MD #283704) used M10 bolt (MD #152655) and nyloc nuts (MD #252807) to secure the LH wing shield to the shield bracket. For model year 2023 and later machines, or for machines that have been serviced with shield bracket assembly (MD #323773), order M8 screw (MD #320336).

28 Flex Linkage Shield – Triple Reel (FD240)

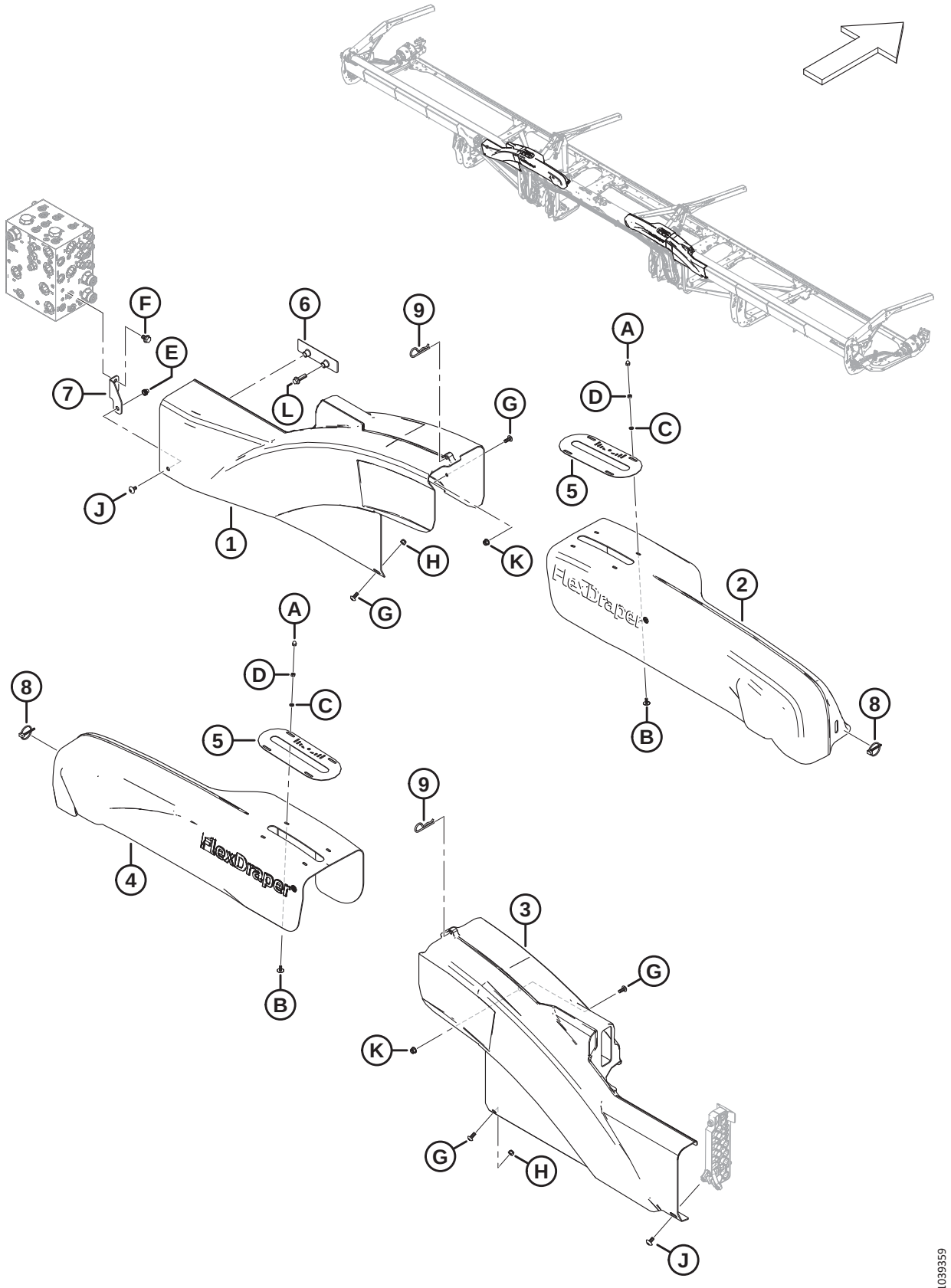

FLEX LINKAGE SHIELD – TRIPLE REEL (FD240)

Ref	Part Number	Description	Qty	Serial Number
1	323032	SHIELD – LH WING	1	
2	323157	SHIELD – LH NF TR BELLCRANK	1	
3	323051	SHIELD – RH WING	1	
4	323158	SHIELD – RH NF TR BELLCRANK	1	
5	360299	GAUGE – FLEX POSITION	2	
6	283849	BRACKET – HYD COVER SUPPORT	1	
7	323773	ASSY – RH SHIELD BRACKET [75]	1	
8	102264	PIN – LYNCH 3/16 X 1 9/16 IN.	2	
9	13125	PIN – HAIR	2	
A	320246	NUT – ACORN M6 X 1.0-8-ZINC		
B	320148	SCREW – TRUSS SLT HD M6 X 1.0 X 16-SPCL-8.8-ZINC		
C	184705	WASHER – FLAT M6-200HV-AA1J		
D	184683	NUT – HEX ISO 4032 M6 X 1-8-ZINC		
E	320448	RIVNUT – M8 X 1.25 HEX		
F	136151	BOLT – HEX FLG HD TFL M10 X 1.5 X 16-8.8-AA1J		
G	320190	SCREW – TORX TRUSS HD M8 X 1.25 X 20-SPCL-8.8-ZINC		
H	184688	NUT – HEX NYLOC M8 X 1.25-8-AA1J		
J	320336	SCREW – TORX TRUSS HD M8 X 1.25 X 16-SPCL-8.8-AA1T		
K	135337	NUT – HEX FLG CTR LK M8 X 1.25-8-AA1J		
L	136211	BOLT – HEX FLG HD M10 X 1.5 X 35-8.8-AA1J		

75. The assembly includes RH shield mounting bracket (NSS) and rivnut (MD #320448). Model year 2022 and prior machines with superseded bracket (MD #283704) used M10 bolt (MD #152655) and nyloc nuts (MD #252807) to secure the LH wing shield to the shield bracket. For model year 2023 and later machines, or for machines that have been serviced with shield bracket assembly (MD #323773), order M8 screw (MD #320336).

29 Flex Linkage Shield – Triple Reel (FD245 and FD250)

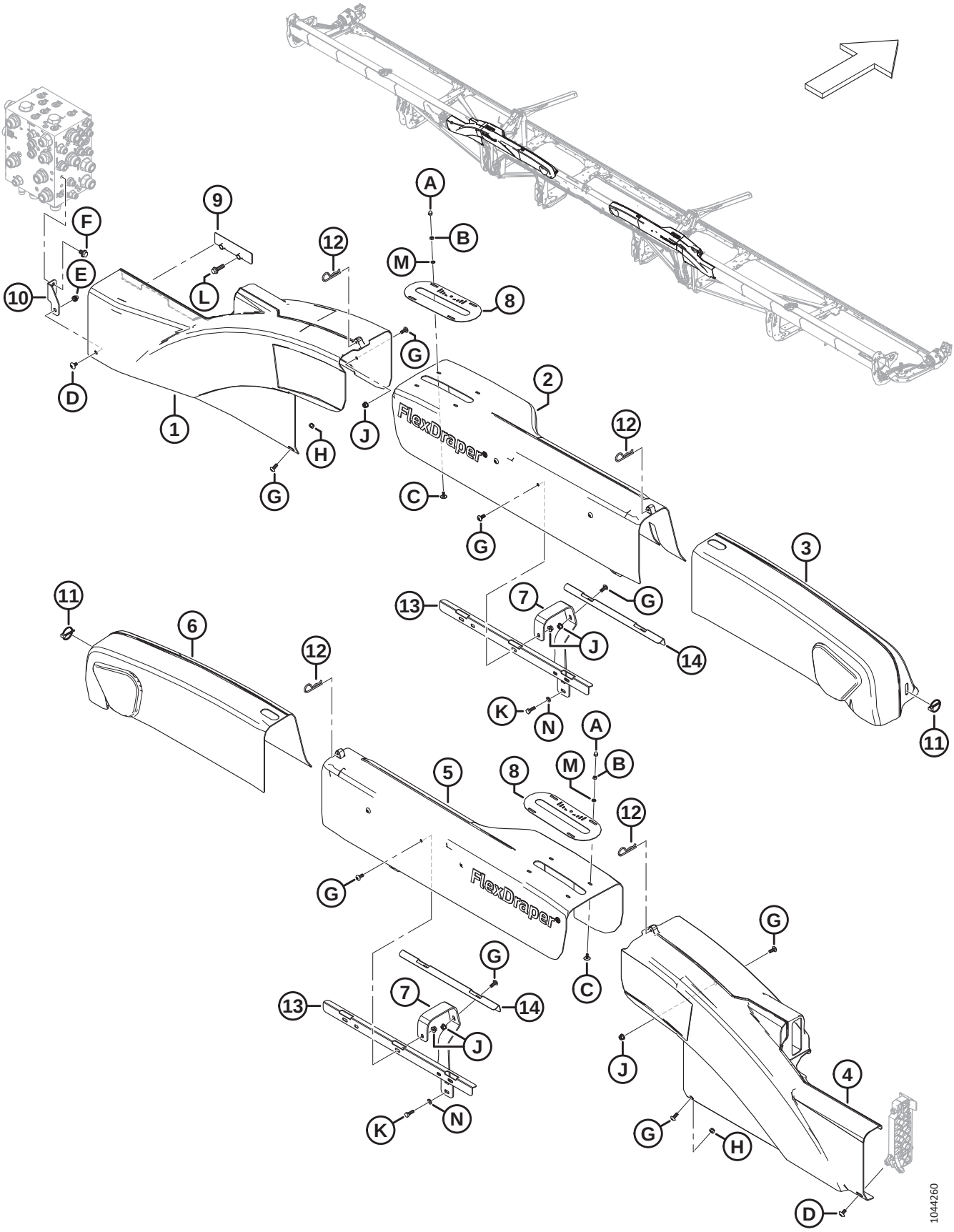

FLEX LINKAGE SHIELD – TRIPLE REEL (FD245 AND FD250)

Ref	Part Number	Description	Qty	Serial Number
1	323032	SHIELD – LH WING	1	
2	319563	SHIELD – WF TR LH FLEX LINKAGE	1	
3	258893	SHIELD – TR LH FLEX LINKAGE	1	
4	323051	SHIELD – RH WING	1	
5	319564	SHIELD – WF TR RH FLEX LINKAGE	1	
6	258932	SHIELD – TR RH FLEX LINKAGE	1	
7	319550	BRACKET – LINKAGE SHIELD	4	
8	360299	GAUGE – FLEX POSITION	2	
9	283849	BRACKET – HYD COVER SUPPORT	1	
10	323773	ASSY – RH SHIELD BRACKET [76]	1	
11	102264	PIN – LYNCH 3/16 X 1 9/16 IN.	2	
12	13125	PIN – HAIR	4	
13	319548	BRACE – TR SHIELDS	2	
14	319549	BRACE – TR SHIELDS FRONT	2	
A	320246	NUT – ACORN M6 X 1.0-8-ZINC		
B	184683	NUT – HEX ISO 4032 M6 X 1-8-AA1J		
C	320148	SCREW – TRUSS SLT HD M6 X 1.0 X 16-SPCL-8.8-ZINC		
D	320336	SCREW – TORX TRUSS HD M8 X 1.25 X 16-SPCL-8.8-AA1T		
E	320448	RIVNUT – M8 X 1.25 HEX		
F	136151	BOLT – HEX FLG HD TFL M10 X 1.5 X 16-8.8-AA1J		
G	320190	SCREW – TORX TRUSS HD M8 X 1.25 X 20-SPCL-8.8-ZINC		
H	184688	NUT – HEX NYLOC M8 X 1.25-8-AA1J		
J	135337	NUT – HEX FLG CTR LK M8 X 1.25-8-AA1J		
K	136057	BOLT – HEX HD TFL M8 X 1.25 X 25-10.9-AA1J		
L	136211	BOLT – HEX FLG HD M10 X 1.5 X 35-8.8-AA1J		
M	184705	WASHER – FLAT M6-200HV-AA1J		
N	184708	WASHER – FLAT M8-200HV-AA1J		

76. The assembly includes RH shield mounting bracket (NSS) and rivnut (MD #320448). Model year 2022 and prior machines with superseded bracket (MD #283704) used M10 bolt (MD #152655) and nyloc nuts (MD #252807) to secure the LH wing shield to the shield bracket. For model year 2023 and later machines, or for machines that have been serviced with shield bracket assembly (MD #323773), order M8 screw (MD #320336).

30 Guards, Hold-Downs, and Cutterbar Shoes – Single Knife, Pointed (FD225, FD230, FD235, and FD240)

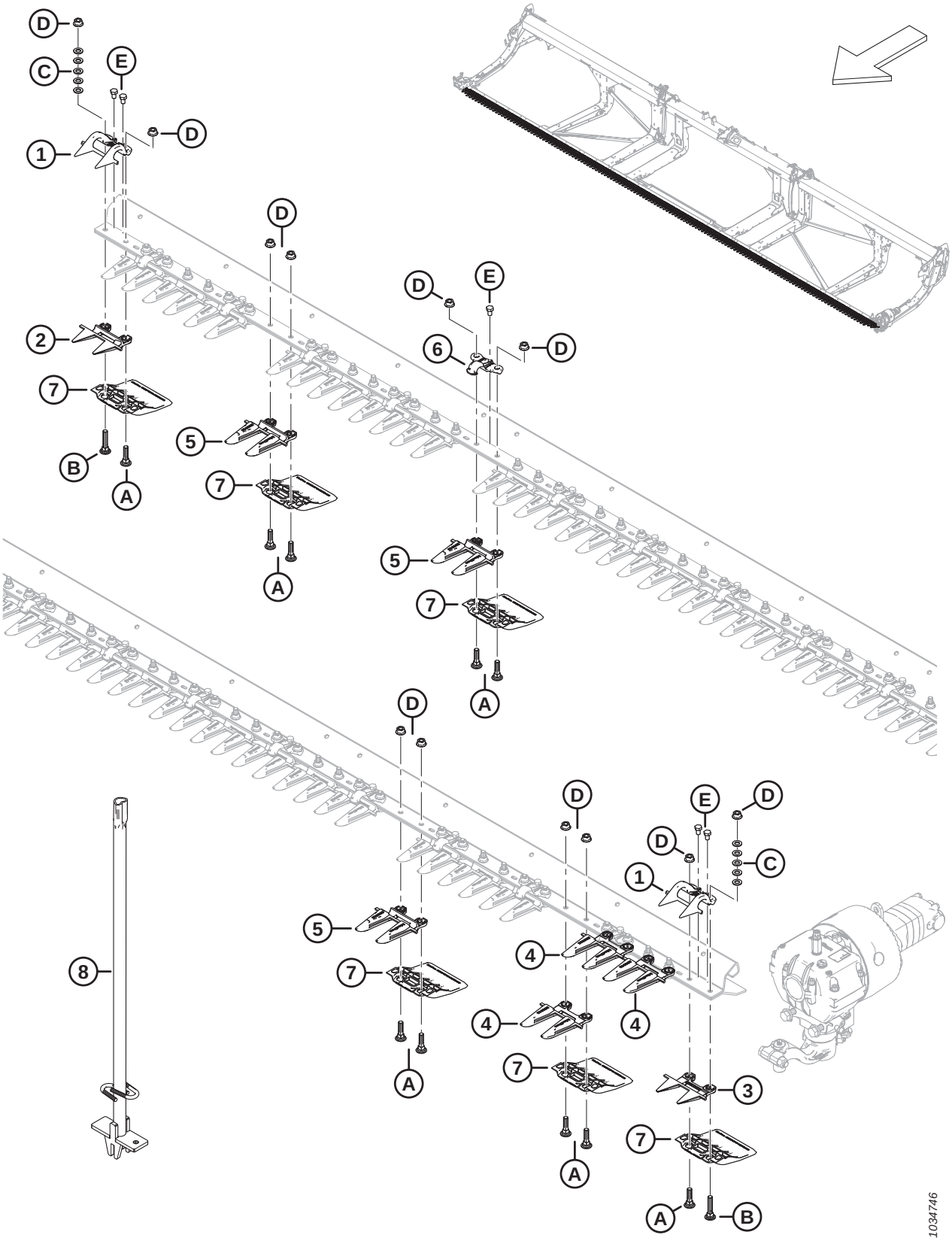

Ref	Part Number	Description	Qty	Serial Number
	286668	KIT – POINTED GUARDS 25 FT SK [77]	A/R	
	286669	KIT – POINTED GUARDS 30 FT SK [78]	A/R	
	286670	KIT – POINTED GUARDS 35 FT SK [79]	A/R	
	286671	KIT – POINTED GUARDS 40 FT SK [80]	A/R	
1	286331	HOLD-DOWN – PLUG FREE END	2	
2	286318	KNIFE GUARD – PLUG FREE SHORT	1	
3	286319	KNIFE GUARD – PLUG FREE END	1	
4	286316	KNIFE GUARD – POINTED END	3	
5	286315	KNIFE GUARD – POINTED [81]		
6	286329	HOLD-DOWN – POINTED [82]		
7	286257	SHOE – WEARPLATE CUTTERBAR [83]		
8	286705	TOOL – WELDT	A/R	
A	226295	BOLT – RHSN SPCL M12 X 47-8.8		
B	226280	BOLT – RHSN SPCL M12 X 60-8.8		
C	184714	WASHER – FLAT REG M12-300HV		
D	136036	NUT – HEX SM FLG M12 X 1.75-8-AA1J		
E	136005	BOLT – HEX HD FINE TFL M10 X 1.25 X 16-8.8-AA1J		

77. The kit includes 45 pointed guards (MD #286315), 3 pointed end guards (MD #286316), 1 PlugFree™ guard (MD #286318), and 1 PlugFree™ end guard (MD #286319).
78. The kit includes 55 pointed guards (MD #286315), 3 pointed end guards (MD #286316), 1 PlugFree™ guard (MD #286318), and 1 PlugFree™ end guard (MD #286319).
79. The kit includes 65 pointed guards (MD #286315), 3 pointed end guards (MD #286316), 1 PlugFree guard (MD #286318), and 1 PlugFree™ end guard (MD #286319).
80. The kit includes 75 pointed guards (MD #286315), 3 pointed end guards (MD #286316), 1 PlugFree™ guard (MD #286318), and 1 PlugFree™ end guard (MD #286319).
81. Quantities: FD225 = 45, FD230 = 55, FD235 = 65, and FD240 = 75.
82. Quantities: FD225 = 24, FD230 = 29, FD235 = 34, and FD240 = 39.
83. Quantities: FD225 = 50, FD230 = 60, FD235 = 70, and FD240 = 80.

31 Guards, Hold-Downs, and Cutterbar Shoes – Double Knife, Pointed (FD235, FD240, FD241, FD245, and FD250)

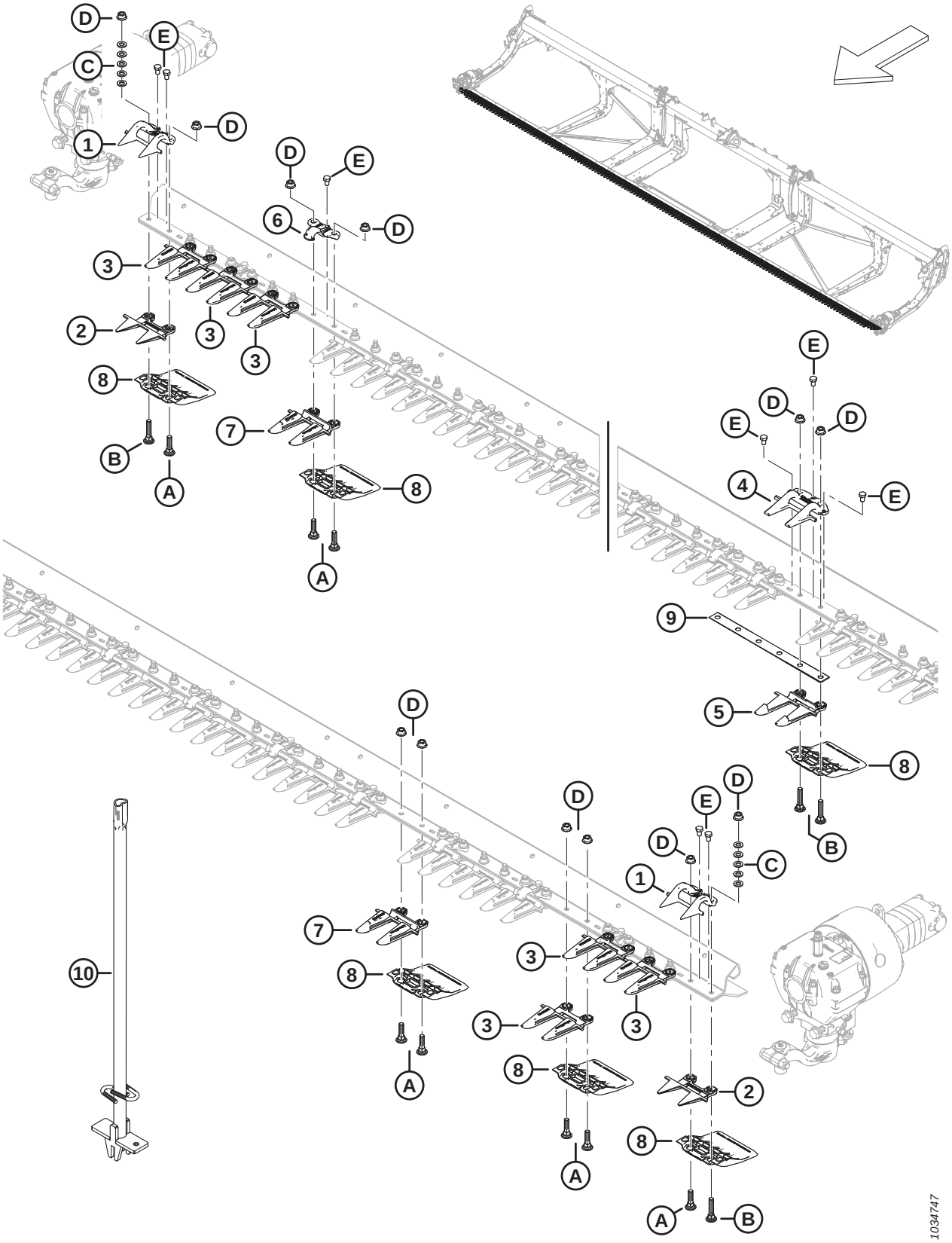

GUARDS, HOLD-DOWNS, AND CUTTERBAR SHOES – DOUBLE KNIFE, POINTED (FD235, FD240, FD241, FD245, AND FD250)

Ref	Part Number	Description	Qty	Serial Number
	286663	KIT – POINTED GUARDS 35 FT DK [84]	A/R	
	286664	KIT – POINTED GUARDS 40 FT DK [85]	A/R	
	286665	KIT – POINTED GUARDS 41 FT DK [86]	A/R	
	286666	KIT – POINTED GUARDS 45 FT DK [87]	A/R	
	286667	KIT – POINTED GUARDS 50 FT DK [88]	A/R	
1	286331	HOLD-DOWN – PLUG FREE END	2	
2	286319	KNIFE GUARD – PLUG FREE END	2	
3	286316	KNIFE GUARD – POINTED END	6	
4	286332	HOLD-DOWN – POINTED CENTER	1	
5	286317	KNIFE GUARD – POINTED CENTER	1	
6	286329	HOLD-DOWN – POINTED [89]		
7	286315	KNIFE GUARD – POINTED [90]		
8	286257	SHOE – WEARPLATE CUTTERBAR [91]		
9	226861	SHIM – DK OVERLAP	1	
10	286705	TOOL – WELDT	A/R	
A	226295	BOLT – RHSN SPCL M12 X 47-8.8		
B	226280	BOLT – RHSN SPCL M12 X 60-8.8		
C	184714	WASHER – FLAT REG M12-300HV		
D	136036	NUT – HEX SM FLG M12 X 1.75-8-AA1J		
E	136005	BOLT – HEX HD FINE TFL M10 X 1.25 X 16-8.8-AA1J		

84. The kit includes 61 pointed guards (MD #286315), 6 pointed end guards (MD #286316), 1 pointed center guard (MD #286317), 2 PlugFree™ end guards (MD #286319), and 1 pointed center hold-down (MD #286332).
85. The kit includes 71 pointed guards (MD #286315), 6 pointed end guards (MD #286316), 1 pointed center guard (MD #286317), 2 PlugFree™ end guards (MD #286319), and 1 pointed center hold-down (MD #286332).
86. The kit includes 73 pointed guards (MD #286315), 6 pointed end guards (MD #286316), 1 pointed center guard (MD #286317), 2 PlugFree™ end guards (MD #286319), and 1 pointed center hold-down (MD #286332).
87. The kit includes 81 pointed guards (MD #286315), 6 pointed end guards (MD #286316), 1 pointed center guard (MD #286317), 2 PlugFree™ end guards (MD #286319), and 1 pointed center hold-down (MD #286332).
88. The kit includes 91 pointed guards (MD #286315), 6 pointed end guards (MD #286316), 1 pointed center guard (MD #286317), 2 PlugFree™ end guards (MD #286319), and 1 pointed center hold-down (MD #286332).
89. Quantities: FD235 = 34, FD240 = 38, FD241 = 39, FD245 = 44, and FD250 = 48.
90. Quantities: FD235 = 61, FD240 = 71, FD241 = 73, FD245 = 81, and FD250 = 91.
91. Quantities: FD235 = 70, FD240 = 80, FD241 = 82, FD245 = 90, and FD250 = 100.

32 Guards, Hold-Downs, and Cutterbar Shoes – Single Knife, PlugFree™ (FD225, FD230, FD235, and FD240)

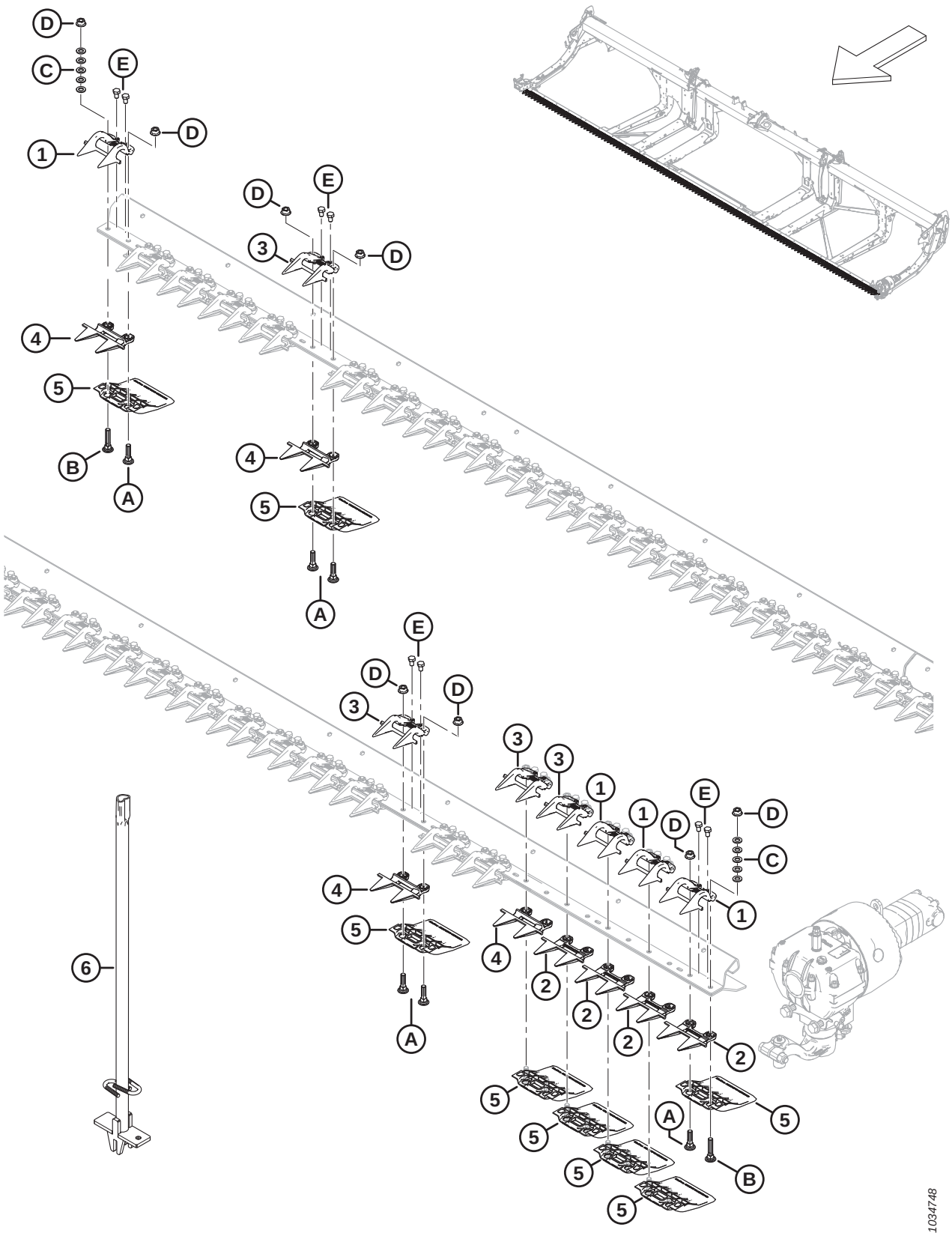

Ref	Part Number	Description	Qty	Serial Number
	286679	KIT – PLUGFREE GUARDS 25 FT SK [92]	A/R	
	286680	KIT – PLUGFREE GUARDS 30 FT SK [93]	A/R	
	286681	KIT – PLUGFREE GUARDS 35 FT SK [94]	A/R	
	286682	KIT – PLUGFREE GUARDS 40 FT SK [95]	A/R	
1	286331	HOLD-DOWN – PLUG FREE END	4	
2	286319	KNIFE GUARD – PLUG FREE END	4	
3	286330	HOLD-DOWN – PLUG FREE [96]		
4	286318	KNIFE GUARD – PLUG FREE SHORT [96]		
5	286257	SHOE – WEARPLATE CUTTERBAR [97]		
6	286705	TOOL – WELDT	A/R	
A	226295	BOLT – RHSN SPCL M12 X 47-8.8		
B	226280	BOLT – RHSN SPCL M12 X 60-8.8		
C	184714	WASHER – FLAT REG M12-300HV		
D	136036	NUT – HEX SM FLG M12 X 1.75-8-AA1J		
E	136005	BOLT – HEX HD FINE TFL M10 X 1.25 X 16-8.8-AA1J		

92. The kit includes 46 PlugFree™ guards (MD #286318) and 4 end guards (MD #286319).
93. The kit includes 56 PlugFree™ guards (MD #286318) and 4 end guards (MD #286319).
94. The kit includes 66 PlugFree™ guards (MD #286318) and 4 end guards (MD #286319).
95. The kit includes 76 PlugFree™ guards (MD #286318) and 4 end guards (MD #286319).
96. Quantities: FD225 = 46, FD230 = 56, FD235 = 66, and FD240 = 76.
97. Quantities: FD225 = 50, FD230 = 60, FD235 = 70, and FD240 = 80.

33 Guards, Hold-Downs, and Cutterbar Shoes – Double Knife, PlugFree™ (FD240, FD241, FD245, and FD250)

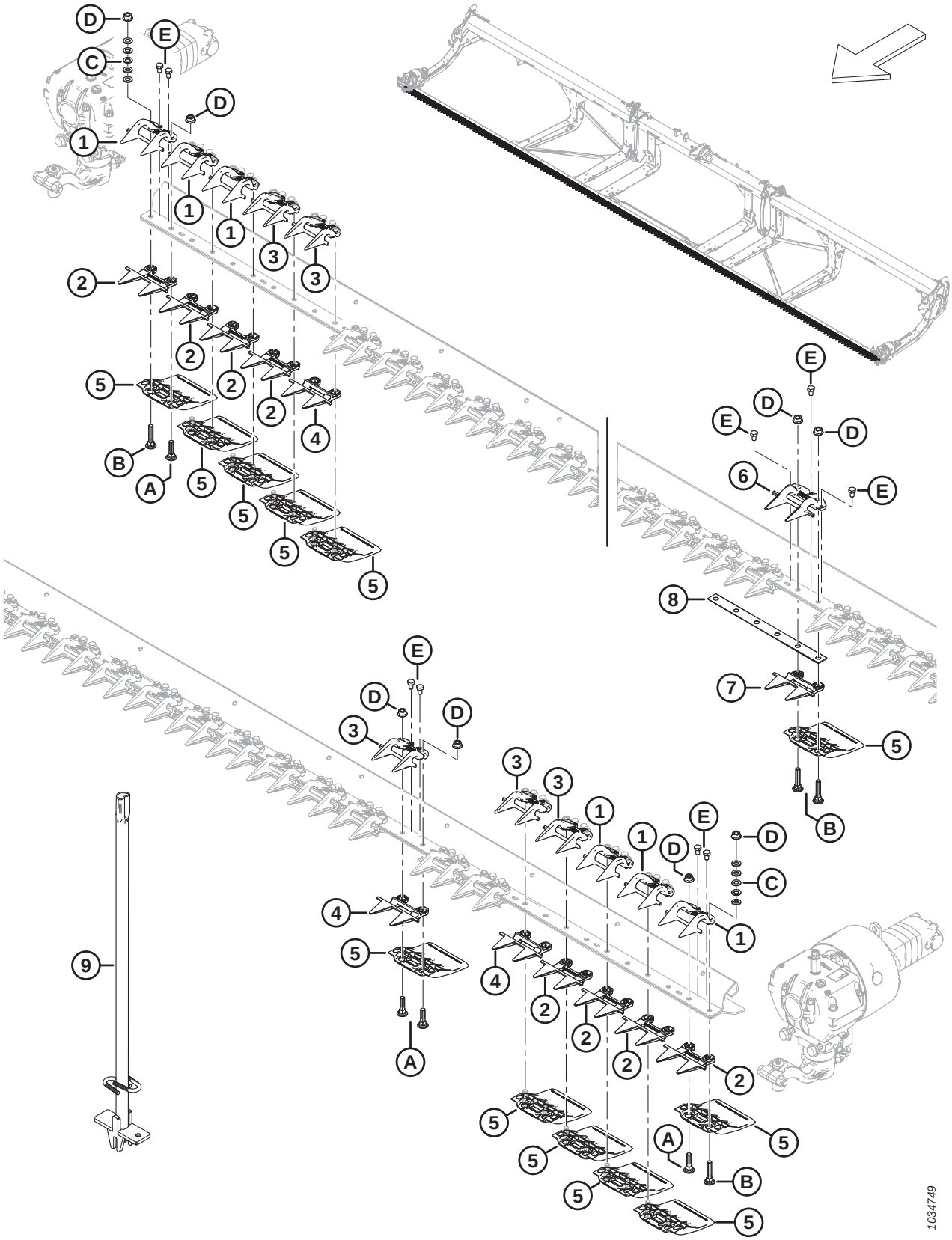

Ref	Part Number	Description	Qty	Serial Number
	286673	KIT – PLUGFREE GUARDS 30 FT DK [98]	A/R	
	286674	KIT – PLUGFREE GUARDS 35 FT DK [99]	A/R	
	286675	KIT – PLUGFREE GUARDS 40 FT DK [100]	A/R	
	286676	KIT – PLUGFREE GUARDS 41 FT DK [101]	A/R	
	286677	KIT – PLUGFREE GUARDS 45 FT DK [102]	A/R	
	286678	KIT – PLUGFREE GUARDS 50 FT DK [103]	A/R	
1	286331	HOLD-DOWN – PLUG FREE END	6	
2	286319	KNIFE GUARD – PLUG FREE END	8	
3	286330	HOLD-DOWN – PLUG FREE [104]		
4	286318	KNIFE GUARD – PLUG FREE SHORT [105]		
5	286257	SHOE – WEARPLATE CUTTERBAR [106]		
6	286333	HOLD-DOWN – PLUG FREE CENTER	1	
7	286320	KNIFE GUARD – PLUG FREE CENTER	1	
8	226861	SHIM – DK OVERLAP	1	
9	286705	TOOL – WELDT	A/R	
A	226295	BOLT – RHSN SPCL M12 X 47-8.8		
B	226280	BOLT – RHSN SPCL M12 X 60-8.8		
C	184714	WASHER – FLAT REG M12-300HV		
D	136036	NUT – HEX SM FLG M12 X 1.75-8-AA1J		
E	136005	BOLT – HEX HD FINE TFL M10 X 1.25 X 16-8.8-AA1J		

98. The kit includes 51 PlugFree™ guards (MD #286318), 8 end guards (MD #286319), 1 center guard (MD #286320), and 1 center hold-down (MD #286333).
99. The kit includes 61 PlugFree™ guards (MD #286318), 8 end guards (MD #286319), 1 center guard (MD #286320), and 1 center hold-down (MD #286333).
100. The kit includes 71 PlugFree™ guards (MD #286318), 8 end guards (MD #286319), 1 center guard (MD #286320), and 1 center hold-down (MD #286333).
101. The kit includes 73 PlugFree™ guards (MD #286318), 8 end guards (MD #286319), 1 center guard (MD #286320), and 1 center hold-down (MD #286333).
102. The kit includes 81 PlugFree™ guards (MD #286318), 8 end guards (MD #286319), 1 center guard (MD #286320), and 1 center hold-down (MD #286333).
103. The kit includes 91 PlugFree™ guards (MD #286318), 8 end guards (MD #286319), 1 center guard (MD #286320), and 1 center hold-down (MD #286333).
104. Quantities: FD240 = 73, FD241 = 75, FD245 = 83, and FD250 = 93.
105. Quantities: FD240 = 71, FD241 = 73, FD245 = 81, and FD250 = 91.
106. Quantities: FD240 = 80, FD241 = 82, FD245 = 90, and FD250 = 100.

34 Knives – Single-Knife Headers (FD225)

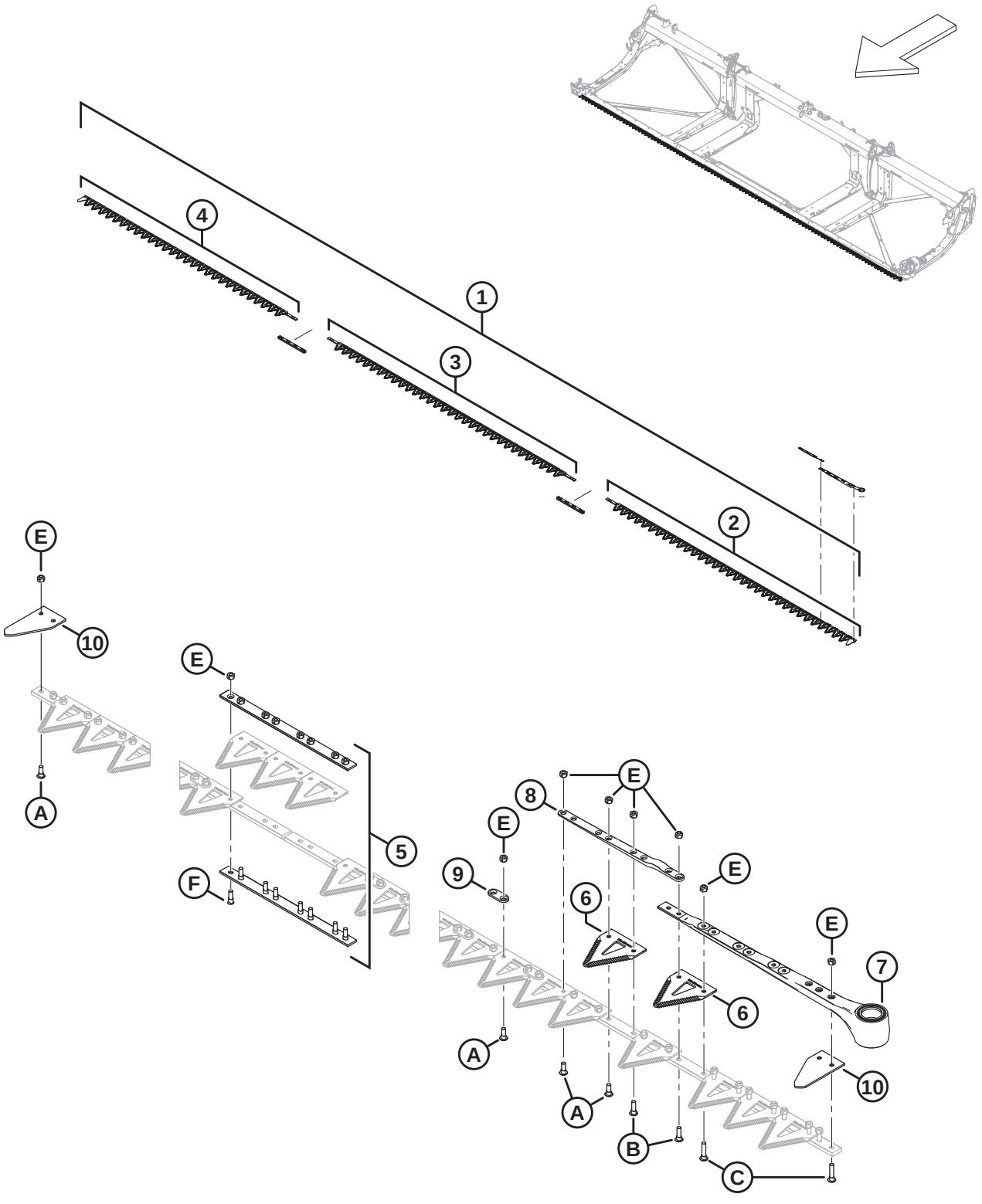

1039416

Ref	Part Number	Description	Qty	Serial Number
1	286597	KIT – KNIFE 25 FT SK COARSE [107]	1	
	286609	KIT – KNIFE 25 FT SK FINE [108]	OPT	
	286779	KIT – KNIFE 25 FT SK ULTRA COARSE [109]	OPT	
2	286562	KNIFE – HEAD SEGMENT LH COARSE 2676 MM	1	
	286579	KNIFE – HEAD SEGMENT LH FINE 2676 MM	OPT	
	286758	KNIFE – HEAD SEGMENT LH ULTRA COARSE 2676 MM	OPT	
3	286564	KNIFE – CENTER SEGMENT COARSE 2663 MM	1	
	286581	KNIFE – CENTER SEGMENT FINE 2663 MM	OPT	
	286760	KNIFE – CENTER SEGMENT ULTRA COARSE 2663 MM	OPT	
4	286566	KNIFE – TAIL SEGMENT SK COARSE 2295 MM	1	
	286583	KNIFE – TAIL SEGMENT SK FINE 2295 MM	OPT	
	286763	KNIFE – TAIL SEGMENT SK ULTRA COARSE 2295 MM	OPT	
5	286493	KIT – KNIFE SPLICE	2	
6	286461	SECTION – CLEARCUT COARSE (25 PACK) [110]		
	286462	SECTION – CLEARCUT FINE (25 PACK) [110]	OPT	
	286627	SECTION – CLEARCUT ULTRA COARSE (25 PACK) [110]	OPT	
7	226941	KNIFE HEAD ASSEMBLY	1	
	115670	O-RING – 1.78 X 34.64	1	
	113937	DISC	1	
	113222	SEAL KIT	1	
	100500	BEARING – NEEDLE	1	
8	286440	BAR – FORGED	1	
9	286481	BAR – REINFORCEMENT (25 PACK)		
10	226983	SECTION – END	2	
A	286475	SCREW – M6 X 18 MM, C/W NUT (50 PACK)		
B	286476	SCREW – M6 X 22 MM, C/W NUT (25 PACK)		
C	286477	SCREW – M6 X 29 MM, C/W NUT (25 PACK)		
D	286478	SCREW – CSK M6 X 14 MM, C/W NUT (25 PACK)		
E	286479	NUT – CTR LOC CSK M6 X 1 (50 PACK)		
F	286621	SCREW – CSK M6 X 22 MM, C/W NUT (25 PACK)		

107. The kit includes one 25-pack of ClearCut™ coarse sections (MD #286461), two knife splice kits (MD #286493), one LH coarse knife head segment (MD #286562), one center coarse knife segment (MD #286564), and one tail coarse knife segment (MD #286566).
108. The kit includes one 25-pack of ClearCut™ fine sections (MD #286462), two knife splice kits (MD #286493), one LH fine knife head segment (MD #286579), one center fine knife segment (MD #286581), and one tail fine knife segment (MD #286583).
109. The kit includes one 25-pack of ClearCut™ ultra coarse sections (MD #286627), two knife splice kits (MD #286493), one LH ultra coarse knife head segment (MD #286758), one center ultra coarse knife segment (MD #286760), and one tail ultra coarse knife segment (MD #286763).
110. Section quantity is 99.

35 Knives – Single-Knife Headers (FD230, FD235, and FD240)

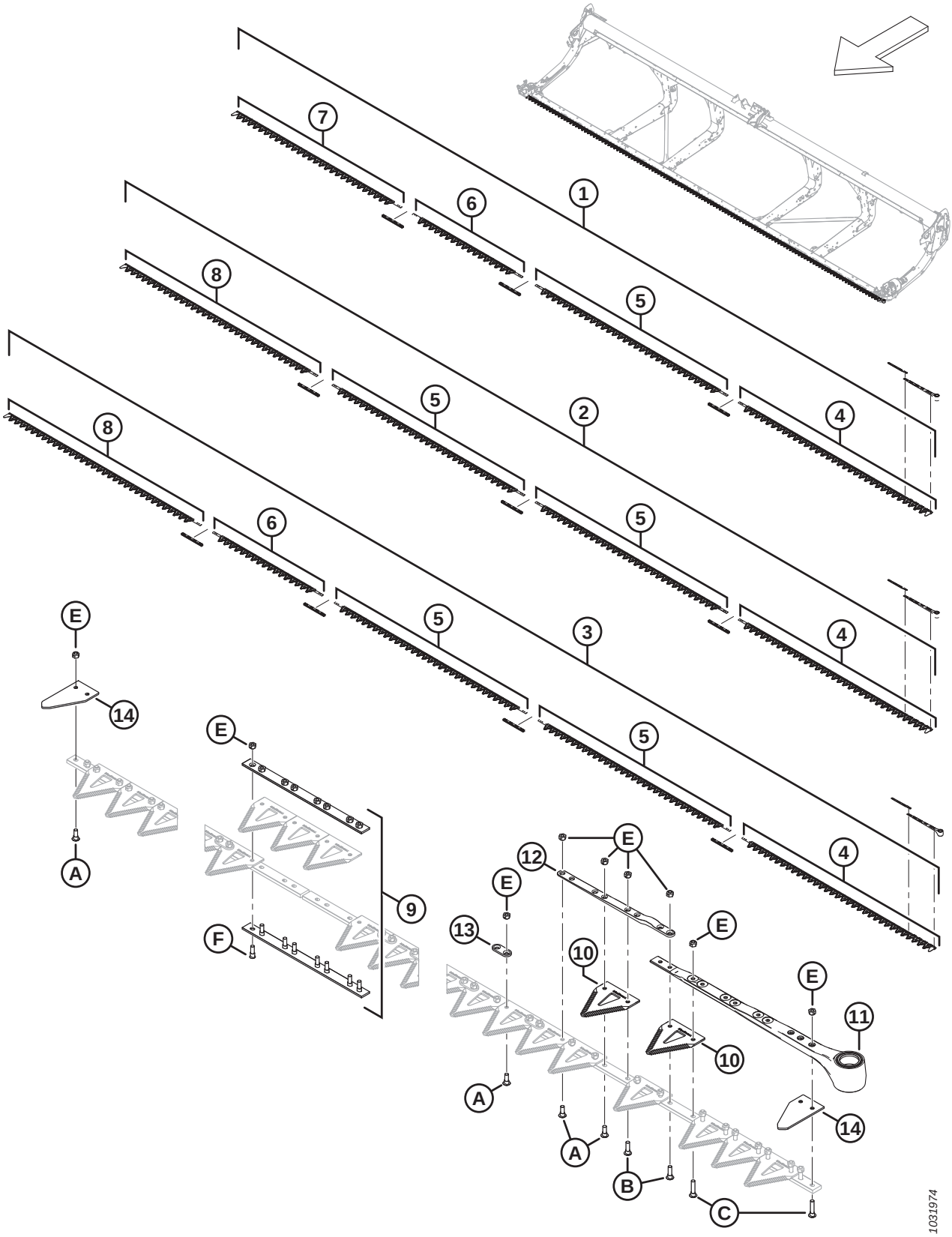

Ref	Part Number	Description	Qty	Serial Number
1	286598	KIT – KNIFE 30 FT SK COARSE [111]	1	
	286610	KIT – KNIFE 30 FT SK FINE [112]	OPT	
	286780	KIT – KNIFE 30 FT SK ULTRA COARSE [113]	OPT	
2	286599	KIT – KNIFE 35 FT SK COARSE [114]	1	
	286611	KIT – KNIFE 35 FT SK FINE [115]	OPT	
	286781	KIT – KNIFE 35 FT SK ULTRA COARSE [116]	OPT	
3	286600	KIT – KNIFE 40 FT SK COARSE [117]	1	
	286612	KIT – KNIFE 40 FT SK FINE [118]	OPT	
	286782	KIT – KNIFE 40 FT SK ULTRA COARSE [119]	OPT	
4	286562	KNIFE – HEAD SEGMENT LH COARSE 2676 MM	1	
	286579	KNIFE – HEAD SEGMENT LH FINE 2676 MM	OPT	
	286758	KNIFE – HEAD SEGMENT LH ULTRA COARSE 2676 MM	OPT	
5	286564	KNIFE – CENTER SEGMENT COARSE 2663 MM [120]		
	286581	KNIFE – CENTER SEGMENT FINE 2663 MM [121]	OPT	
	286760	KNIFE – CENTER SEGMENT ULTRA COARSE 2663 MM [121]	OPT	
6	286565	KNIFE – CENTER SEGMENT COARSE 1520 MM [122]		
	286582	KNIFE – CENTER SEGMENT FINE 1520 MM [123]	OPT	
	286761	KNIFE – CENTER SEGMENT ULTRA COARSE 1520 MM [123]	OPT	

111. The kit includes one 25-pack of ClearCut™ coarse sections (MD #286461), three knife splice kits (MD #286493), one LH coarse knife head segment (MD #286562), one center coarse knife segment (MD #286564), one center coarse knife segment (MD #286565), and one tail coarse knife segment (MD #286566).
112. The kit includes one 25-pack of ClearCut™ fine sections (MD #286462), three knife splice kits (MD #286493), one LH fine knife head segment (MD #286579), one center fine knife segment (MD #286581), one center fine knife segment (MD #286582), and one tail fine knife segment (MD #286583).
113. The kit includes one 25-pack of ClearCut™ ultra coarse sections (MD #286627), three knife splice kits (MD #286493), one LH ultra coarse knife head segment (MD #286758), one center ultra coarse knife segment (MD #286760), one center ultra coarse knife segment (MD #286761), and one tail ultra coarse knife segment (MD #286763).
114. The kit includes one 25-pack of ClearCut™ coarse sections (MD #286461), three knife splice kits (MD #286493), one LH coarse knife head segment (MD #286562), two center coarse knife segments (MD #286564), and one tail coarse knife segment (MD #286567).
115. The kit includes one 25-pack of ClearCut™ fine sections (MD #286462), three knife splice kits (MD #286493), one LH fine knife head segment (MD #286579), two center fine knife segments (MD #286581), and one tail fine knife segment (MD #286584).
116. The kit includes one 25-pack of ClearCut™ ultra coarse sections (MD #286627), three knife splice kits (MD #286493), one LH ultra coarse knife head segment (MD #286758), two center ultra coarse knife segments (MD #286760), and one tail ultra coarse knife segment (MD #286764).
117. The kit includes one 25-pack of ClearCut™ coarse sections (MD #286461), four knife splice kits (MD #286493), one LH coarse knife head segment (MD #286562), two center coarse knife segments (MD #286564), one center coarse knife segment (MD #286565), and one tail coarse knife segment (MD #286567).
118. The kit includes one 25-pack of ClearCut™ fine sections (MD #286462), four knife splice kits (MD #286493), one LH fine knife head segment (MD #286579), two center fine knife segments (MD #286581), one center fine knife segment (MD #286582), and one tail fine knife segment (MD #286584).
119. The kit includes one 25-pack of ClearCut™ ultra coarse sections (MD #286627), four knife splice kits (MD #286493), one LH ultra coarse knife head segment (MD #286758), two center ultra coarse knife segments (MD #286760), one center ultra coarse knife segment (MD #286761), and one tail ultra coarse knife segment (MD #286764).
120. Quantities (individual segments: FD230 = 1, FD235 = 2, and FD240 = 2.
121. Quantities (individual segments: FD230 = 1, FD235 = 2, and FD240 = 2.
122. Quantities (individual segments: FD230 = 1, FD235 = 0, and FD240 = 1.
123. Quantities (individual segments: FD230 = 1, FD235 = 0, and FD240 = 1.

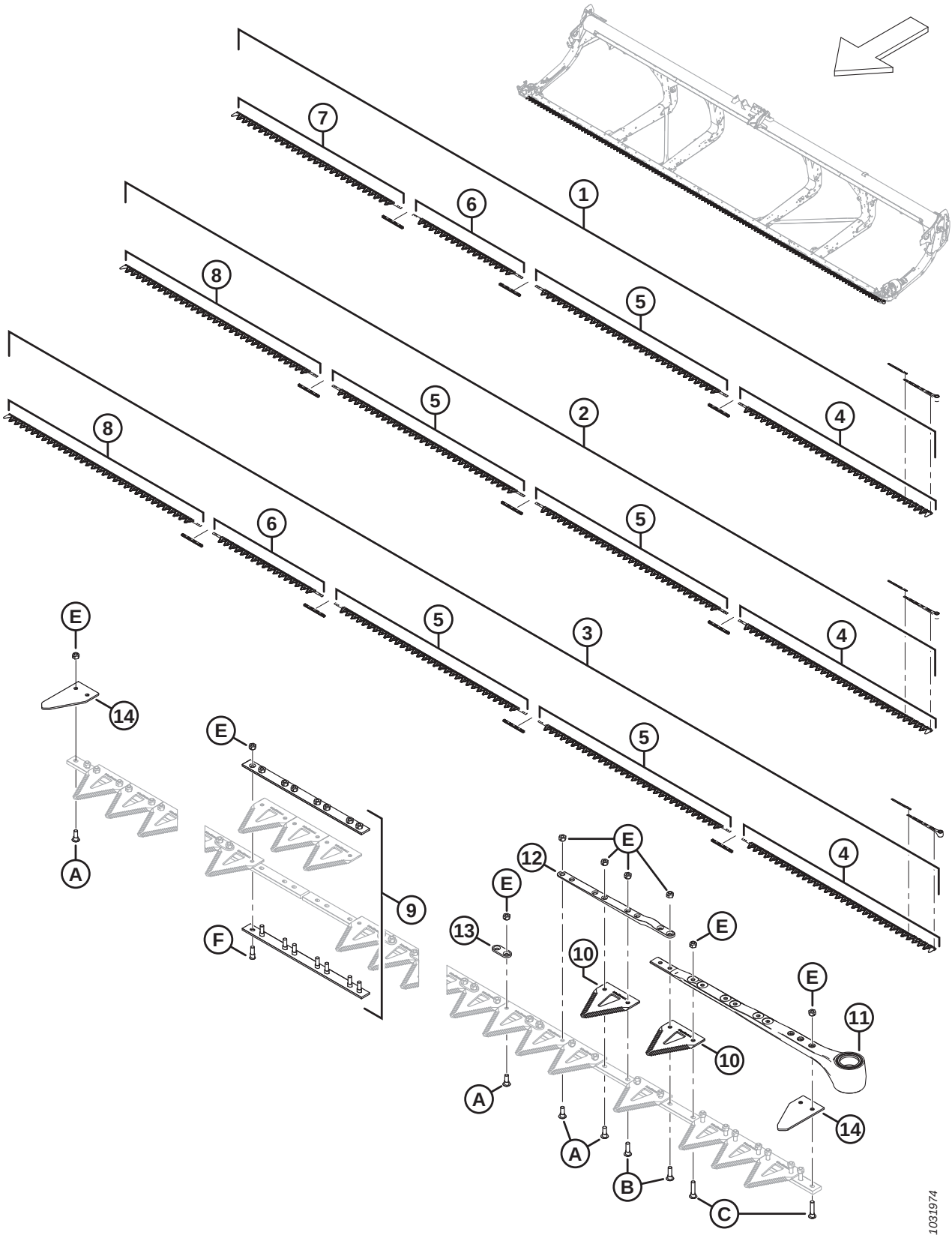
7
6
1
8
5
5
2
4
8
6
5
3
4
5
4
E
14
A
E
9
F
E
12
E
13
E
10
E
11
10
14
A
A
B
C
1031974

Ref	Part Number	Description	Qty	Serial Number
7	286566	KNIFE – TAIL SEGMENT SK COARSE 2295 MM [124]		
	286583	KNIFE – TAIL SEGMENT SK FINE 2295 MM [125]	OPT	
	286763	KNIFE – TAIL SEGMENT SK ULTRA COARSE 2295 MM [125]	OPT	
8	286567	KNIFE – TAIL SEGMENT SK COARSE 2676 MM [126]		
	286584	KNIFE – TAIL SEGMENT SK FINE 2676 MM [127]	OPT	
	286764	KNIFE – TAIL SEGMENT SK ULTRA COARSE 2676 MM [127]	OPT	
9	286493	KIT – KNIFE SPLICE [128]		
10	286461	SECTION – CLEARCUT COARSE (25 PACK) [129]		
	286462	SECTION – CLEARCUT FINE (25 PACK) [130]	OPT	
	286627	SECTION – CLEARCUT ULTRA COARSE (25 PACK) [130]	OPT	
11	226941	KNIFE HEAD ASSEMBLY	1	
	115670	O-RING – 1.78 X 34.64	1	
	113937	DISC	1	
	113222	SEAL KIT	1	
	100500	BEARING – NEEDLE	1	
12	286440	BAR – FORGED	1	
13	286481	BAR – REINFORCEMENT (25 PACK)		
14	226983	SECTION – END	2	
A	286475	SCREW – M6 X 18 MM, C/W NUT (50 PACK)		
B	286476	SCREW – M6 X 22 MM, C/W NUT (25 PACK)		
C	286477	SCREW – M6 X 29 MM, C/W NUT (25 PACK)		
D	286478	SCREW – CSK M6 X 14 MM, C/W NUT (25 PACK)		
E	286479	NUT – CTR LOC CSK M6 X 1 (50 PACK)		
F	286621	SCREW – CSK M6 X 22 MM, C/W NUT (25 PACK)		

124. Quantities (individual segments): FD230 = 1, FD235 = 0, and FD240 = 0.
125. Quantities (individual segments): FD230 = 1, FD235 = 0, and FD240 = 0.
126. Quantities (individual segments): FD230 = 0, FD235 = 1, and FD240 = 1.
127. Quantities (individual segments): FD230 = 0, FD235 = 1, and FD240 = 1.
128. Quantities: FD230 = 3, FD235 = 3, and FD240 = 4.
129. Quantities (individual sections): FD230 = 119, FD235 = 139, and FD240 = 159.
130. Quantities (individual sections): FD230 = 119, FD235 = 139, and FD240 = 159.

36 Knives – Double-Knife Headers (FD235 and FD240)

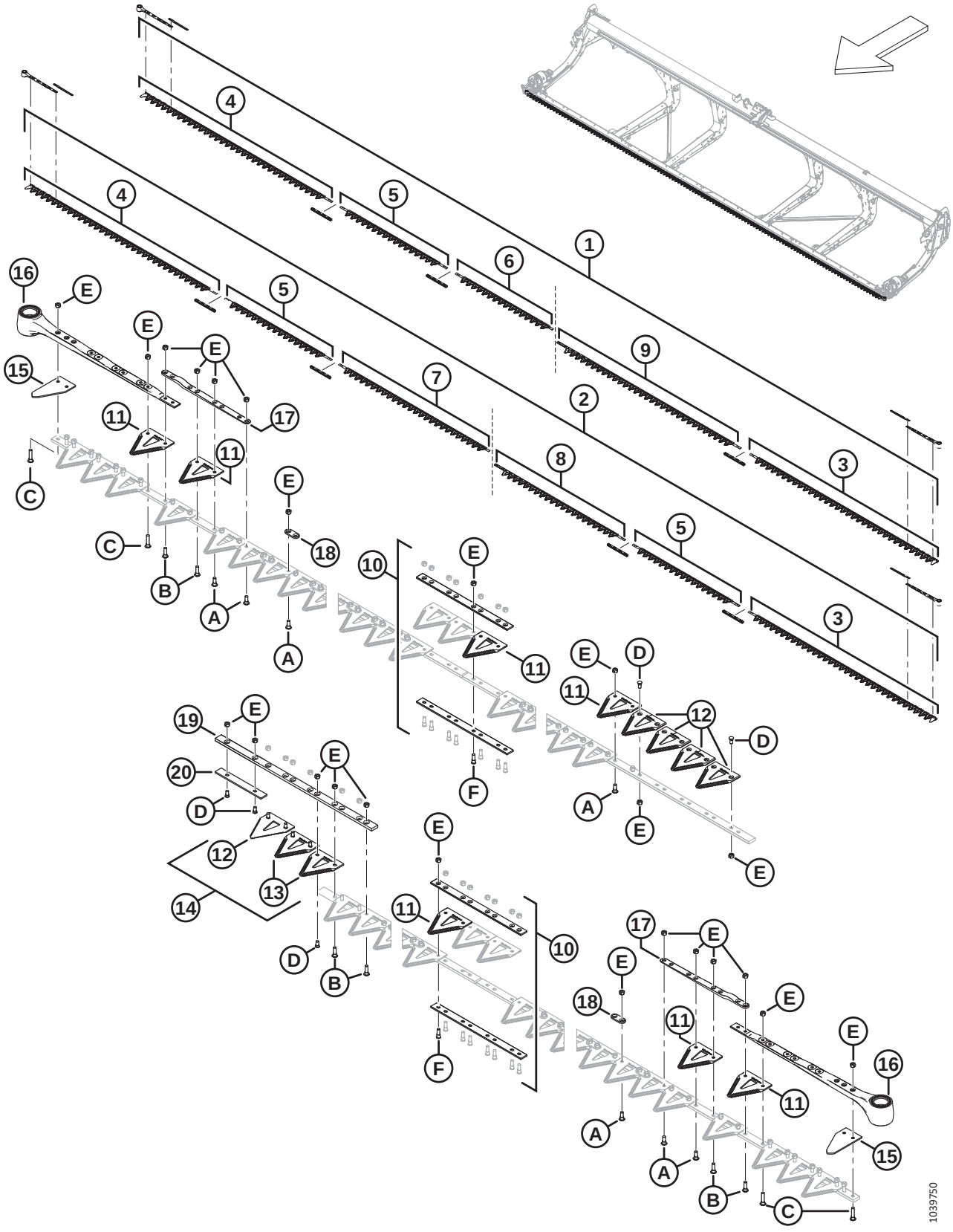

Ref	Part Number	Description	Qty	Serial Number
1	286886	KIT – KNIFE 35 FT DK COARSE [131]	1	
	286616	KIT – KNIFE 35 FT DK FINE [132]	OPT	
	286787	KIT – KNIFE 35 FT DK ULTRA COARSE [133]	OPT	
2	286887	KIT – KNIFE 40 FT DK COARSE [134]	1	
	286617	KIT – KNIFE 40 FT DK FINE [135]	OPT	
	286788	KIT – KNIFE 40 FT DK ULTRA COARSE [136]	OPT	
3	286562	KNIFE – HEAD SEGMENT LH COARSE 2676 MM	1	
	286579	KNIFE – HEAD SEGMENT LH FINE 2676 MM	OPT	
	286758	KNIFE – HEAD SEGMENT LH ULTRA COARSE 2676 MM	OPT	
4	286563	KNIFE – HEAD SEGMENT RH COARSE 2676 MM	1	
	286580	KNIFE – HEAD SEGMENT RH FINE 2676 MM	OPT	
	286759	KNIFE – HEAD SEGMENT RH ULTRA COARSE 2676 MM	OPT	
5	286565	KNIFE – CENTER SEGMENT COARSE 1520 MM [137]		
	286582	KNIFE – CENTER SEGMENT FINE 1520 MM [137]	OPT	
	286761	KNIFE – CENTER SEGMENT ULTRA COARSE 1520 MM [137]	OPT	
6	286865	KNIFE – TAIL SEGMENT RH COARSE 1385 MM [138]		
	286870	KNIFE – TAIL SEGMENT RH FINE 1385 MM [138]	OPT	
	286875	KNIFE – TAIL SEGMENT RH ULTRA COARSE 1385 MM [138]	OPT	
7	286866	KNIFE – TAIL SEGMENT RH COARSE 2147 MM [139]		
	286871	KNIFE – TAIL SEGMENT RH FINE 2147 MM [139]	OPT	
	286876	KNIFE – TAIL SEGMENT RH ULTRA COARSE 2147 MM [139]	OPT	

131. The kit includes one 25-pack of ClearCut™ coarse sections (MD #286461), three knife splice kits (MD #286493), one LH coarse knife head segment (MD #286562), one RH coarse knife head segment (MD #286563), one center coarse knife segment (MD #286565), one RH tail coarse knife segment (MD #286865), and one LH tail coarse knife segment (MD #286575).
132. The kit includes one 25-pack of ClearCut™ fine sections (MD #286462), three knife splice kits (MD #286493), one LH fine knife head segment (MD #286579), one RH fine knife head segment (MD #286580), one center fine knife segment (MD #286582), one RH tail fine knife segment (MD #286870), and one LH tail fine knife segment (MD #286592).
133. The kit includes one 25-pack of ClearCut™ ultra coarse sections (MD #286627), three knife splice kits (MD #286493), one LH ultra coarse knife head segment (MD #286758), one RH ultra coarse knife head segment (MD #286759), one center ultra coarse knife segment (MD #286761), one RH tail ultra coarse knife segment (MD #286875), and one LH tail ultra coarse knife segment (MD #286768).
134. The kit includes one 25-pack of ClearCut™ coarse sections (MD #286461), four knife splice kits (MD #286493), one LH coarse knife head segment (MD #286562), one RH coarse knife head segment (MD #286563), two center coarse knife segments (MD #286565), one RH tail coarse knife segment (MD #286866), and one LH tail coarse knife segment (MD #286574).
135. The kit includes one 25-pack of ClearCut™ coarse sections (MD #286462), four knife splice kits (MD #286493), one LH coarse knife head segment (MD #286579), one RH coarse knife head segment (MD #286580), two center coarse knife segments (MD #286582), one RH tail coarse knife segment (MD #286871), and one LH tail coarse knife segment (MD #286591).
136. The kit includes one 25-pack of ClearCut™ coarse sections (MD #286627), four knife splice kits (MD #286493), one LH coarse knife head segment (MD #286758), one RH coarse knife head segment (MD #286759), two center coarse knife segments (MD #286761), one RH tail coarse knife segment (MD #286876), and one LH tail coarse knife segment (MD #286767).
137. Quantities (individual segments): FD235 = 1 and FD240 = 2.
138. Quantities (individual segments): FD235 = 1 and FD240 = 0.
139. Quantities (individual segments): FD235 = 0 and FD240 = 1.

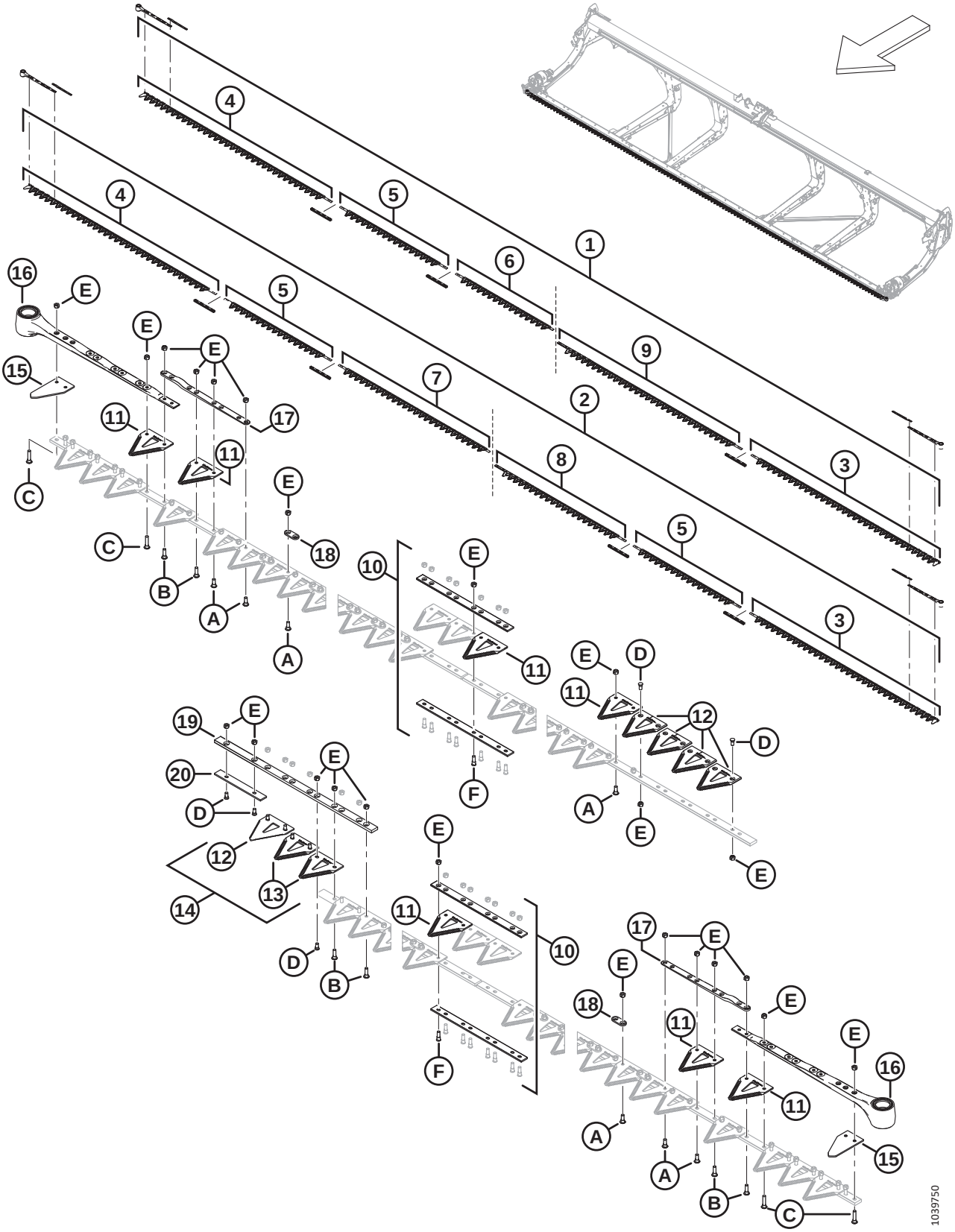
1039750

Ref	Part Number	Description	Qty	Serial Number
8	286574	KNIFE – TAIL SEGMENT LH COARSE 1856 MM [139]		
	286591	KNIFE – TAIL SEGMENT LH FINE 1856 MM [139]	OPT	
	286767	KNIFE – TAIL SEGMENT LH ULTRA COARSE 1856 MM [139]	OPT	
9	286575	KNIFE – TAIL SEGMENT LH COARSE 2618 MM [138]		
	286592	KNIFE – TAIL SEGMENT LH FINE 2618 MM [138]	OPT	
	286768	KNIFE – TAIL SEGMENT LH ULTRA COARSE 2618 MM [138]	OPT	
10	286493	KIT – KNIFE SPLICE [140]		
11	286461	SECTION – CLEARCUT COARSE (25 PACK) [141]		
	286462	SECTION – CLEARCUT FINE (25 PACK) [141]	OPT	
	286627	SECTION – CLEARCUT ULTRA COARSE (25 PACK) [141]	OPT	
12	286463	SECTION – CLEARCUT COARSE TOP CSK (10 PACK) [142]		
	286465	SECTION – CLEARCUT FINE TOP CSK (10 PACK) [142]	OPT	
	286628	SECTION – CLEARCUT ULTRA COARSE TOP CSK (10 PACK) [142]	OPT	
13	286464	SECTION – CLEARCUT COARSE BOTTOM CSK (10 PACK) [143]		
	286466	SECTION – CLEARCUT FINE BOTTOM CSK (10 PACK) [143]	OPT	
	286629	SECTION – CLEARCUT ULTRA COARSE BOTTOM CSK (10 PACK) [143]	OPT	
14	286861	KIT – CLEARCUT COARSE CENTER [144]		
	286862	KIT – CLEARCUT FINE CENTER [145]	OPT	
	286863	KIT – CLEARCUT ULTRA COARSE CENTER [146]	OPT	
15	226983	SECTION – END	2	
16	226941	KNIFE HEAD ASSEMBLY	2	
	115670	O-RING – 1.78 X 34.64		
	113937	DISC		
	113222	SEAL KIT		
	100500	BEARING – NEEDLE		
17	286440	BAR – FORGED	1	
18	286481	BAR – REINFORCEMENT (25 PACK) [147]		
19	286362	BAR – KNIFE OVERLAP GUIDE	1	
20	286363	BAR – WEAR	1	
A	286475	SCREW – M6 X 18 MM, C/W NUT (50 PACK)		
B	286476	SCREW – M6 X 22 MM, C/W NUT (25 PACK)		
C	286477	SCREW – M6 X 29 MM, C/W NUT (25 PACK)		

140. The kit includes bottom splice bar (NSS), top splice bar (NSS), eight screws (MD #286314), and eight nuts (MD #226259). Quantities: FD235 = 3 and FD240 = 4.
141. Quantities (individual sections): FD235 = 139 and FD240 = 159.
142. Quantities (individual sections): FD235 = 5 and FD240 = 5.
143. Quantities (individual sections): FD235 = 2 and FD240 = 2.
144. The kit includes five ClearCut™ coarse top CSK sections (NSS), two ClearCut™ coarse bottom CSK sections (NSS), and hardware.
145. The kit includes five ClearCut™ fine top CSK sections (NSS), two ClearCut™ fine bottom CSK sections (NSS), and hardware.
146. The kit includes five ClearCut™ ultra coarse top CSK sections (NSS), two ClearCut™ ultra coarse bottom CSK sections (NSS), and hardware.
147. Quantities (individual bars): FD235 = 72 and FD240 = 88.

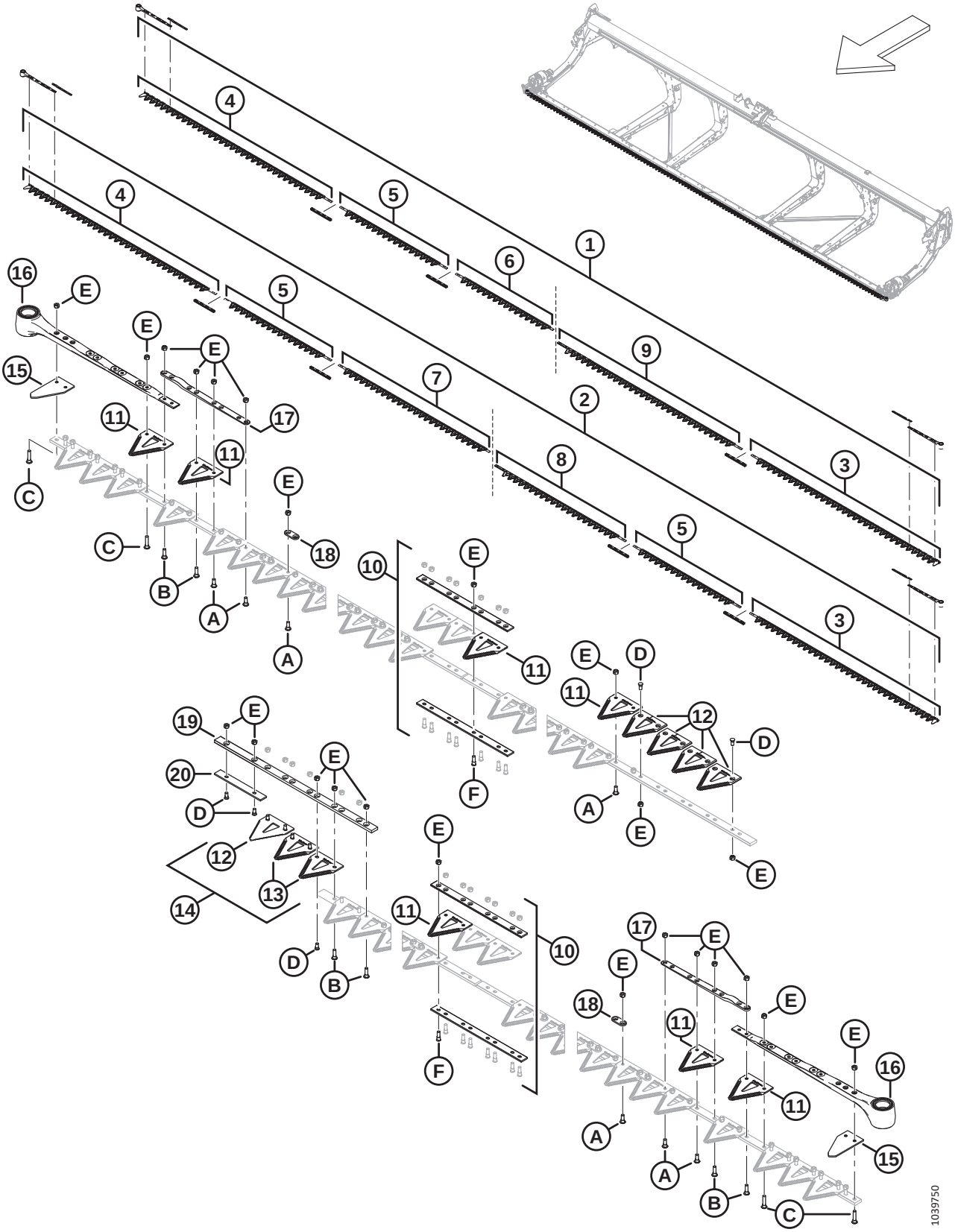
1039750

Ref	Part Number	Description	Qty	Serial Number
D	286478	SCREW – CSK M6 X 14 MM, C/W NUT (25 PACK)		
E	286479	NUT – CTR LOC CSK M6 X 1 (50 PACK)		
F	286621	SCREW – CSK M6 X 22 MM, C/W NUT (25 PACK)		

37 Knives – Double-Knife Headers (FD241)

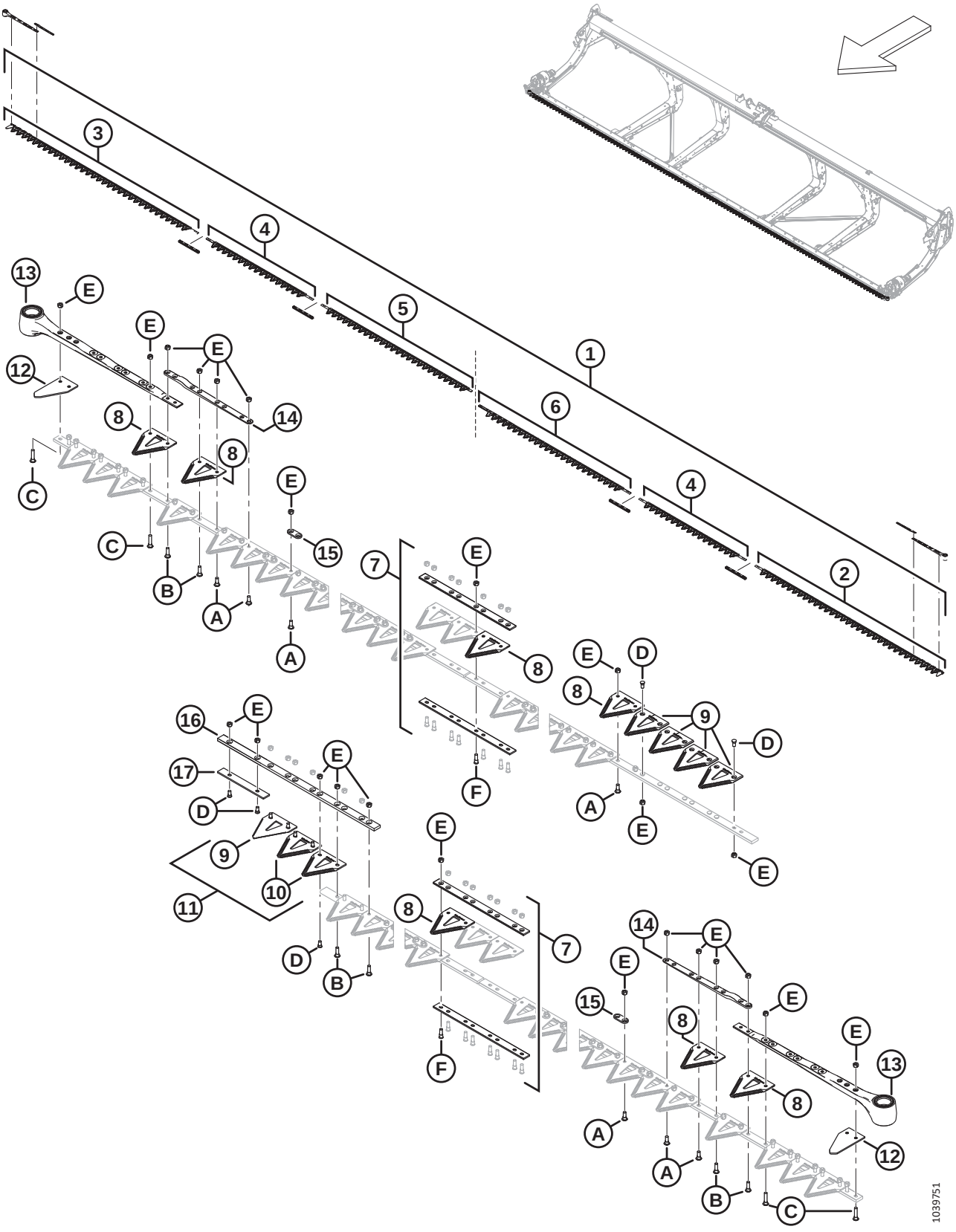

Ref	Part Number	Description	Qty	Serial Number
1	286888	KIT – KNIFE 41 FT DK COARSE [148]	1	
	286618	KIT – KNIFE 41 FT DK FINE [149]	OPT	
	286789	KIT – KNIFE 41 FT DK ULTRA COARSE [150]	OPT	
2	286562	KNIFE – HEAD SEGMENT LH COARSE 2676 MM	1	
	286579	KNIFE – HEAD SEGMENT LH FINE 2676 MM	OPT	
	286758	KNIFE – HEAD SEGMENT LH ULTRA COARSE 2676 MM	OPT	
3	286563	KNIFE – HEAD SEGMENT RH COARSE 2676 MM	1	
	286580	KNIFE – HEAD SEGMENT RH FINE 2676 MM	OPT	
	286759	KNIFE – HEAD SEGMENT RH ULTRA COARSE 2676 MM	OPT	
4	286565	KNIFE – CENTER SEGMENT COARSE 1520 MM	2	
	286582	KNIFE – CENTER SEGMENT FINE 1520 MM	OPT	
	286761	KNIFE – CENTER SEGMENT ULTRA COARSE 1520 MM	OPT	
5	286866	KNIFE – TAIL SEGMENT RH COARSE 2147 MM	1	
	286871	KNIFE – TAIL SEGMENT RH FINE 2147 MM	OPT	
	286876	KNIFE – TAIL SEGMENT RH ULTRA COARSE 2147 MM	OPT	
6	286576	KNIFE – TAIL SEGMENT LH COARSE 2161 MM	1	
	286593	KNIFE – TAIL SEGMENT LH FINE 2161 MM	OPT	
	286769	KNIFE – TAIL SEGMENT LH ULTRA COARSE 2161 MM	OPT	
7	286493	KIT – KNIFE SPLICE [151]	4	
8	286461	SECTION – CLEARCUT COARSE (25 PACK) [152]		
	286462	SECTION – CLEARCUT FINE (25 PACK) [152]	OPT	
	286627	SECTION – CLEARCUT ULTRA COARSE (25 PACK) [152]	OPT	
9	286463	SECTION – CLEARCUT COARSE TOP CSK (10 PACK) [153]		
	286465	SECTION – CLEARCUT FINE TOP CSK (10 PACK) [153]	OPT	
	286628	SECTION – CLEARCUT ULTRA COARSE TOP CSK (10 PACK) [153]	OPT	
10	286464	SECTION – CLEARCUT COARSE BOTTOM CSK (10 PACK) [154]		
	286466	SECTION – CLEARCUT FINE BOTTOM CSK (10 PACK) [154]	OPT	
	286629	SECTION – CLEARCUT ULTRA COARSE BOTTOM CSK (10 PACK) [154]	OPT	

148. The kit includes one 25-pack of ClearCut™ coarse sections (MD #286461), four knife splice kits (MD #286493), one LH coarse knife head segment (MD #286562), one RH coarse knife head segment (MD #286563), two center coarse knife segments (MD #286565), one RH tail coarse knife segment (MD #286866), and one LH tail coarse knife segment (MD #286576).
149. The kit includes one 25-pack of ClearCut™ fine sections (MD #286462), four knife splice kits (MD #286493), one LH fine knife head segment (MD #286579), one RH fine knife head segment (MD #286580), two center fine knife segments (MD #286582), one RH tail fine knife segment (MD #286871), and one LH tail fine knife segment (MD #286593).
150. The kit includes one 25-pack of ClearCut™ ultra coarse sections (MD #286627), four knife splice kits (MD #286493), one LH ultra coarse knife head segment (MD #286758), one RH ultra coarse knife head segment (MD #286759), two center ultra coarse knife segments (MD #286761), one RH tail ultra coarse knife segment (MD #286876), and one LH tail ultra coarse knife segment (MD #286769).
151. The kit includes bottom splice bar (NSS), top splice bar (NSS), eight screws (MD #286314), and eight nuts (MD #226259).
152. Quantities (individual sections): 163.
153. Quantities (individual sections): 5.
154. Quantities (individual sections): 2.

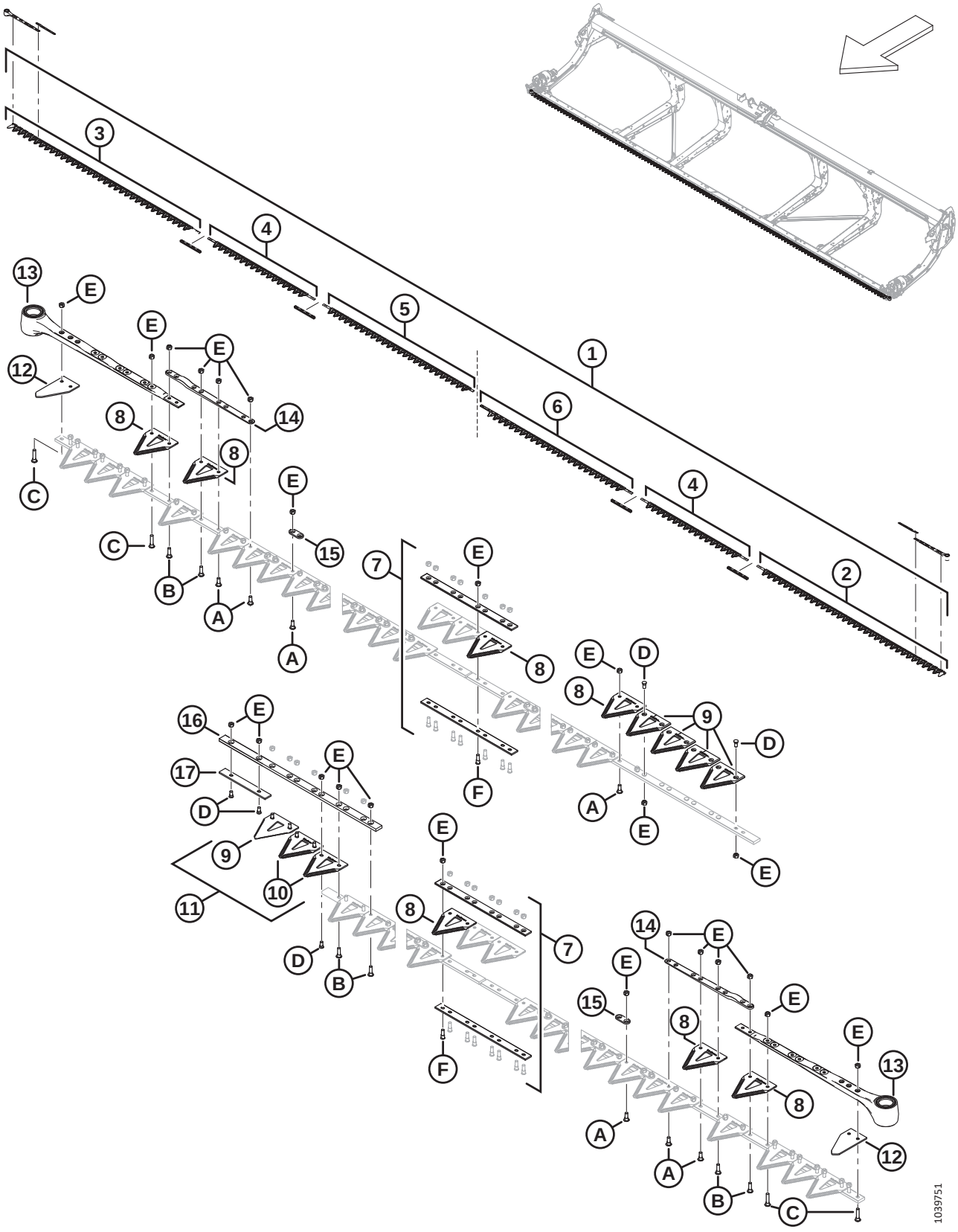
1039751

Ref	Part Number	Description	Qty	Serial Number
11	286861	KIT – CLEARCUT COARSE CENTER [155]	A/R	
	286862	KIT – CLEARCUT FINE CENTER [156]	OPT	
	286863	KIT – CLEARCUT ULTRA COARSE CENTER [157]	OPT	
12	226983	SECTION – END	2	
13	226941	KNIFE HEAD ASSEMBLY	2	
	115670	O-RING – 1.78 X 34.64		
	113937	DISC		
	113222	SEAL KIT		
	100500	BEARING – NEEDLE		
14	286440	BAR – FORGED	2	
15	286481	BAR – REINFORCEMENT (25 PACK) [158]		
16	286362	BAR – KNIFE OVERLAP GUIDE	1	
17	286363	BAR – WEAR	1	
A	286475	SCREW – M6 X 18 MM, C/W NUT (50 PACK)		
B	286476	SCREW – M6 X 22 MM, C/W NUT (25 PACK)		
C	286477	SCREW – M6 X 29 MM, C/W NUT (25 PACK)		
D	286478	SCREW – CSK M6 X 14 MM, C/W NUT (25 PACK)		
E	286479	NUT – CTR LOC CSK M6 X 1 (50 PACK)		
F	286621	SCREW – CSK M6 X 22 MM, C/W NUT (25 PACK)		

155. The kit includes five ClearCut™ coarse top CSK sections (NSS), two ClearCut™ coarse bottom CSK sections (NSS), and hardware.
156. The kit includes five ClearCut™ fine top CSK sections (NSS), two ClearCut™ fine bottom CSK sections (NSS), and hardware.
157. The kit includes five ClearCut™ ultra coarse top CSK sections (NSS), two ClearCut™ ultra coarse bottom CSK sections (NSS), and hardware.
158. Quantities (individual bars): 88.

38 Knives – Double-Knife Headers (FD245)

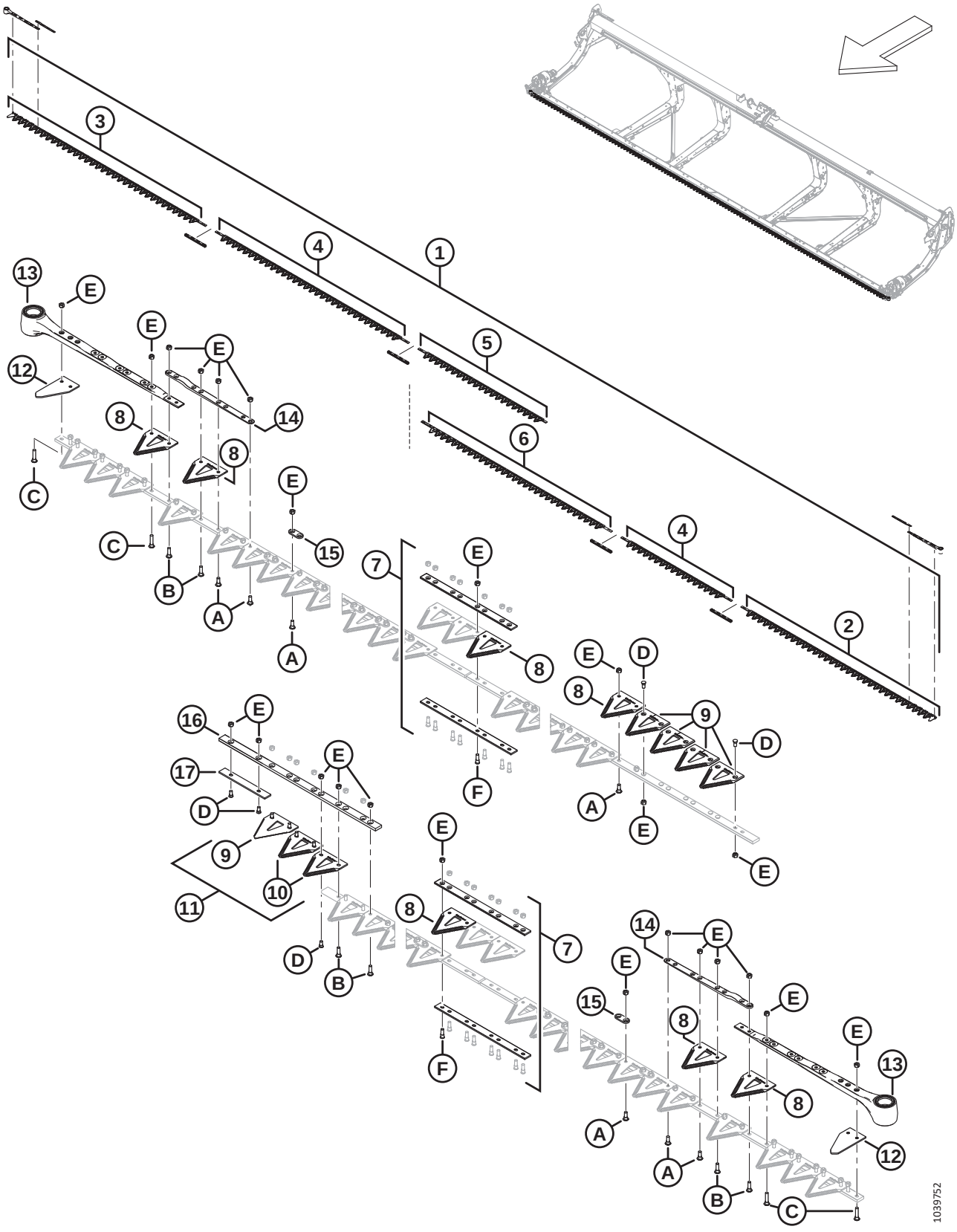

Ref	Part Number	Description	Qty	Serial Number
1	286889	KIT – KNIFE 45 FT DK COARSE [159]	1	
	286619	KIT – KNIFE 45 FT DK FINE [160]	OPT	
	286790	KIT – KNIFE 45 FT DK ULTRA COARSE [161]	OPT	
2	286562	KNIFE – HEAD SEGMENT LH COARSE 2676 MM	1	
	286579	KNIFE – HEAD SEGMENT LH FINE 2676 MM	OPT	
	286758	KNIFE – HEAD SEGMENT LH ULTRA COARSE 2676 MM	OPT	
3	286563	KNIFE – HEAD SEGMENT RH COARSE 2676 MM	1	
	286580	KNIFE – HEAD SEGMENT RH FINE 2676 MM	OPT	
	286759	KNIFE – HEAD SEGMENT RH ULTRA COARSE 2676 MM	OPT	
4	286564	KNIFE – CENTER SEGMENT COARSE 2663 MM	1	
	286565	KNIFE – CENTER SEGMENT COARSE 1520 MM	1	
	286581	KNIFE – CENTER SEGMENT FINE 2663 MM	OPT	
	286582	KNIFE – CENTER SEGMENT FINE 1520 MM	OPT	
	286760	KNIFE – CENTER SEGMENT ULTRA COARSE 2663 MM	OPT	
	286581	KNIFE – CENTER SEGMENT ULTRA COARSE 1520 MM	OPT	
5	286867	KNIFE – TAIL SEGMENT RH COARSE 1766 MM	1	
	286872	KNIFE – TAIL SEGMENT RH FINE 1766 MM	OPT	
	286877	KNIFE – TAIL SEGMENT RH ULTRA COARSE 1766 MM	OPT	
6	286575	KNIFE – TAIL SEGMENT LH COARSE 2618 MM	1	
	286592	KNIFE – TAIL SEGMENT LH FINE 2618 MM	OPT	
	286768	KNIFE – TAIL SEGMENT LH ULTRA COARSE 2618 MM	OPT	
7	286493	KIT – KNIFE SPLICE [162]	4	
8	286461	SECTION – CLEARCUT COARSE (25 PACK) [163]		
	286462	SECTION – CLEARCUT FINE (25 PACK) [164]	OPT	
	286627	SECTION – CLEARCUT ULTRA COARSE (25 PACK) [164]	OPT	
9	286463	SECTION – CLEARCUT COARSE TOP CSK (10 PACK) [165]		
	286465	SECTION – CLEARCUT FINE TOP CSK (10 PACK) [166]	OPT	
	286628	SECTION – CLEARCUT ULTRA COARSE TOP CSK (10 PACK) [166]	OPT	

159. The kit includes one 25-pack of ClearCut™ coarse sections (MD #286461), four knife splice kits (MD #286493), one LH coarse knife head segment (MD #286562), one RH coarse knife head segment (MD #286563), one center coarse knife segment (2663 mm) (MD #286564), one center coarse knife segment (1520 mm) (MD #286565), one RH tail coarse knife segment (MD #286867), and one LH tail coarse knife segment (MD #286575).
160. The kit includes one 25-pack of ClearCut™ fine sections (MD #286462), four knife splice kits (MD #286493), one LH fine knife head segment (MD #286579), one RH fine knife head segment (MD #286580), one center fine knife segment (2663 mm) (MD #286581), one center fine knife segment (1520 mm) (MD #286582), one RH tail fine knife segment (MD #286872), and one LH tail fine knife segment (MD #286592).
161. The kit includes one 25-pack of ClearCut™ ultra coarse sections (MD #286627), four knife splice kits (MD #286493), one LH ultra coarse knife head segment (MD #286758), one RH ultra coarse knife head segment (MD #286759), one center ultra coarse knife segment (2663 mm) (MD #286760), one center ultra coarse knife segment (1520 mm) (MD #286761), one RH tail ultra coarse knife segment (MD #286877), and one LH tail ultra coarse knife segment (MD #286768).
162. The kit includes bottom splice bar (NSS), top splice bar (NSS), eight screws (MD #286314), and eight nuts (MD #226259).
163. Quantities (individual sections): 179.
164. Quantities (individual sections): 179.
165. Quantities (individual sections): 5.
166. Quantities (individual sections): 5.

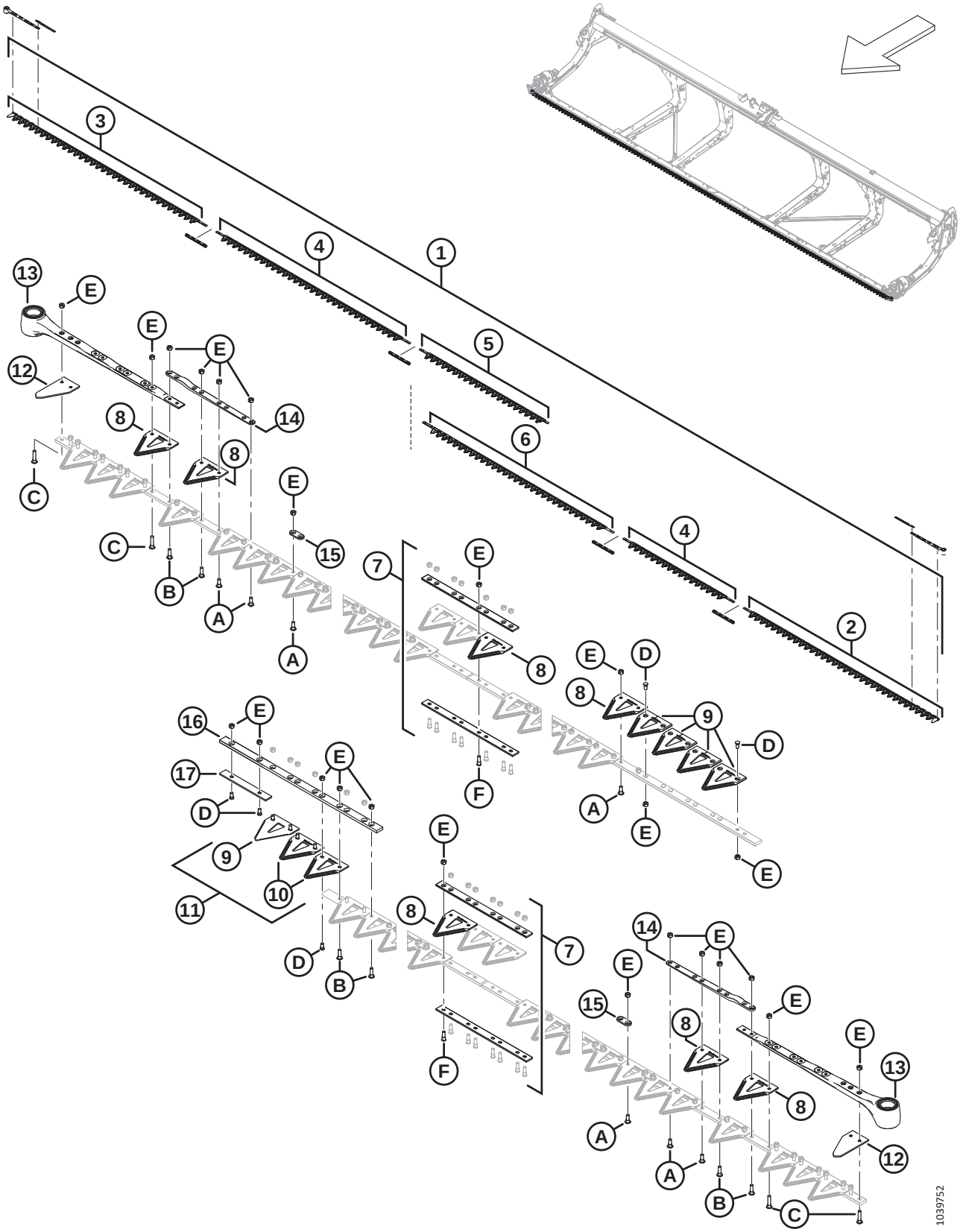
1039752

Ref	Part Number	Description	Qty	Serial Number
10	286464	SECTION – CLEARCUT COARSE BOTTOM CSK (10 PACK) [167]		
	286466	SECTION – CLEARCUT FINE BOTTOM CSK (10 PACK) [168]	OPT	
	286629	SECTION – CLEARCUT ULTRA COARSE BOTTOM CSK (10 PACK) [168]	OPT	
11	286861	KIT – CLEARCUT COARSE CENTER [169]		
	286862	KIT – CLEARCUT FINE CENTER [170]	OPT	
	286863	KIT – CLEARCUT ULTRA COARSE CENTER [171]	OPT	
12	226983	SECTION – END	2	
13	226941	KNIFE HEAD ASSEMBLY	2	
	115670	O-RING – 1.78 X 34.64		
	113937	DISC		
	113222	SEAL KIT		
	100500	BEARING – NEEDLE		
14	286440	BAR – FORGED	2	
15	286481	BAR – REINFORCEMENT (25 PACK) [172]		
16	286362	BAR – KNIFE OVERLAP GUIDE	1	
17	286363	BAR – WEAR	1	
A	286475	SCREW – M6 X 18 MM, C/W NUT (50 PACK)		
B	286476	SCREW – M6 X 22 MM, C/W NUT (25 PACK)		
C	286477	SCREW – M6 X 29 MM, C/W NUT (25 PACK)		
D	286478	SCREW – CSK M6 X 14 MM, C/W NUT (25 PACK)		
E	286479	NUT – CTR LOC CSK M6 X 1 (50 PACK)		
F	286621	SCREW – CSK M6 X 22 MM, C/W NUT (25 PACK)		

167. Quantities (individual sections): 2.
168. Quantities (individual sections): 2.
169. The kit includes five ClearCut™ coarse top CSK sections (NSS), two ClearCut™ coarse bottom CSK sections (NSS), and hardware.
170. The kit includes five ClearCut™ fine top CSK sections (NSS), two ClearCut™ fine bottom CSK sections (NSS), and hardware.
171. The kit includes five ClearCut™ ultra coarse top CSK sections (NSS), two ClearCut™ ultra coarse bottom CSK sections (NSS), and hardware.
172. Quantities (individual bars): 103.

39 Knives – Double-Knife Headers (FD250)

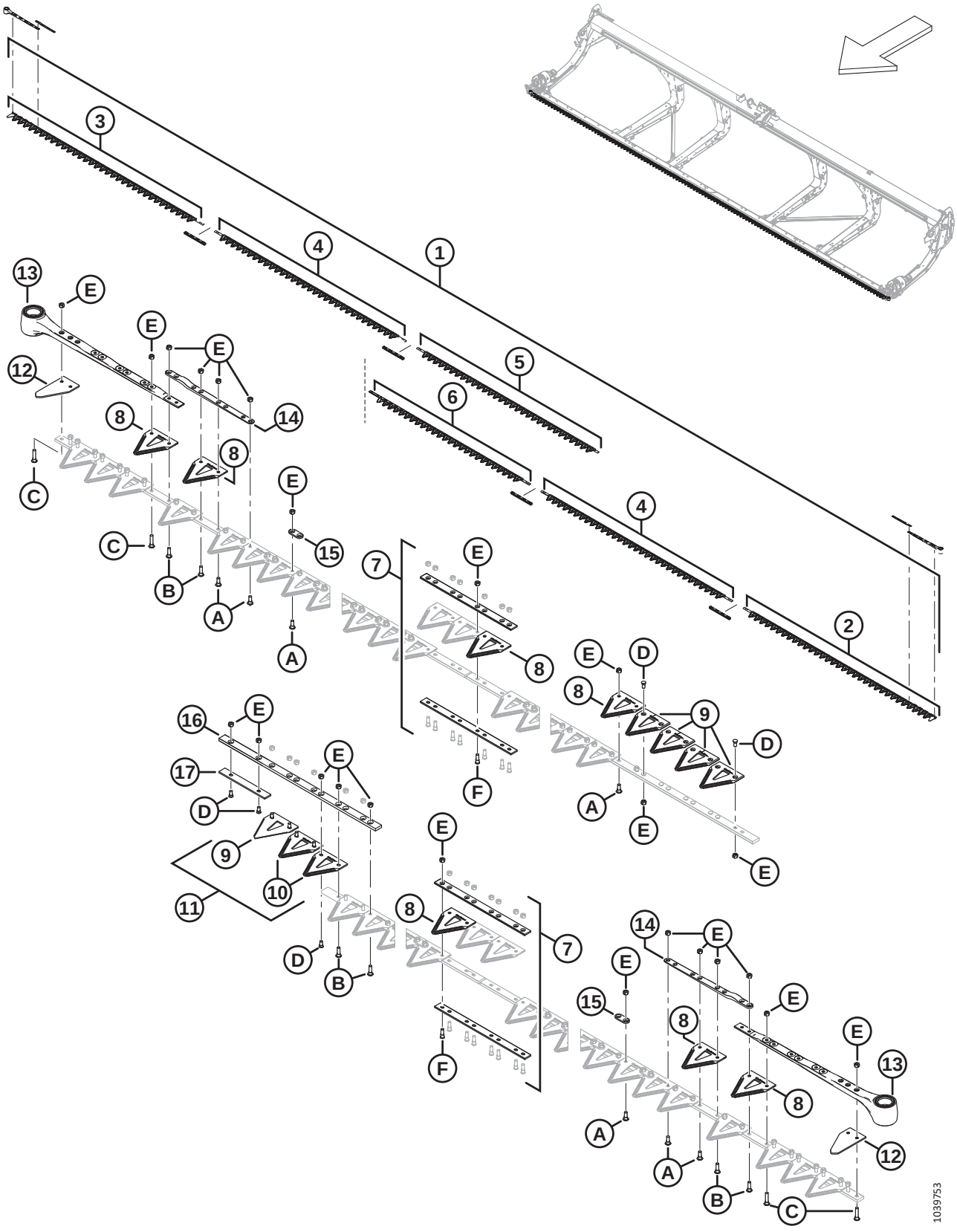

Ref	Part Number	Description	Qty	Serial Number
1	286890	KIT – KNIFE 50 FT DK COARSE [173]	1	
	286620	KIT – KNIFE 50 FT DK FINE [174]	OPT	
	286791	KIT – KNIFE 50 FT DK ULTRA COARSE [175]	OPT	
2	286562	KNIFE – HEAD SEGMENT LH COARSE 2676 MM	1	
	286579	KNIFE – HEAD SEGMENT LH FINE 2676 MM	OPT	
	286758	KNIFE – HEAD SEGMENT LH ULTRA COARSE 2676 MM	OPT	
3	286563	KNIFE – HEAD SEGMENT RH COARSE 2676 MM	1	
	286580	KNIFE – HEAD SEGMENT RH FINE 2676 MM	OPT	
	286759	KNIFE – HEAD SEGMENT RH ULTRA COARSE 2676 MM	OPT	
4	286564	KNIFE – CENTER SEGMENT COARSE 2663 MM	2	
	286581	KNIFE – CENTER SEGMENT FINE 2663 MM	OPT	
	286760	KNIFE – CENTER SEGMENT ULTRA COARSE 2663 MM	OPT	
5	286868	KNIFE – TAIL SEGMENT RH COARSE 2528 MM	1	
	286873	KNIFE – TAIL SEGMENT RH FINE 2528 MM	OPT	
	286878	KNIFE – TAIL SEGMENT RH ULTRA COARSE 2528 MM	OPT	
6	286578	KNIFE – TAIL SEGMENT LH COARSE 2237 MM	1	
	286595	KNIFE – TAIL SEGMENT LH FINE 2237 MM	OPT	
	286770	KNIFE – TAIL SEGMENT LH ULTRA COARSE 2237 MM	OPT	
7	286493	KIT – KNIFE SPLICE [176]	4	
8	286461	SECTION – CLEARCUT COARSE (25 PACK) [177]		
	286462	SECTION – CLEARCUT FINE (25 PACK) [178]	OPT	
	286627	SECTION – CLEARCUT ULTRA COARSE (25 PACK) [178]	OPT	
9	286463	SECTION – CLEARCUT COARSE TOP CSK (10 PACK) [179]		
	286465	SECTION – CLEARCUT FINE TOP CSK (10 PACK) [180]	OPT	
	286628	SECTION – CLEARCUT ULTRA COARSE TOP CSK (10 PACK) [180]	OPT	

173. The kit includes one 25-pack of ClearCut™ coarse sections (MD #286461), four knife splice kits (MD #286493), one LH coarse knife head segment (MD #286562), one RH coarse knife head segment (MD #286563), two center coarse knife segments (MD #286564), one RH tail coarse knife segment (MD #286868), and one LH tail coarse knife segment (MD #286578).
174. The kit includes one 25-pack of ClearCut™ fine sections (MD #286462), four knife splice kits (MD #286493), one LH fine knife head segment (MD #286579), one RH fine knife head segment (MD #286580), two center fine knife segments (MD #286581), one RH tail fine knife segment (MD #286873), and one LH tail fine knife segment (MD #286595).
175. The kit includes one 25-pack of ClearCut™ ultra coarse sections (MD #286627), four knife splice kits (MD #286493), one LH ultra coarse knife head segment (MD #286758), one RH ultra coarse knife head segment (MD #286759), two center ultra coarse knife segments (MD #286760), one RH tail ultra coarse knife segment (MD #286878), and one LH tail ultra coarse knife segment (MD #286770).
176. The kit includes bottom splice bar (NSS), top splice bar (NSS), eight screws (MD #286314), and eight nuts (MD #226259).
177. Quantities (individual sections): 199.
178. Quantities (individual sections): 199.
179. Quantities (individual sections): 5.
180. Quantities (individual sections): 5.

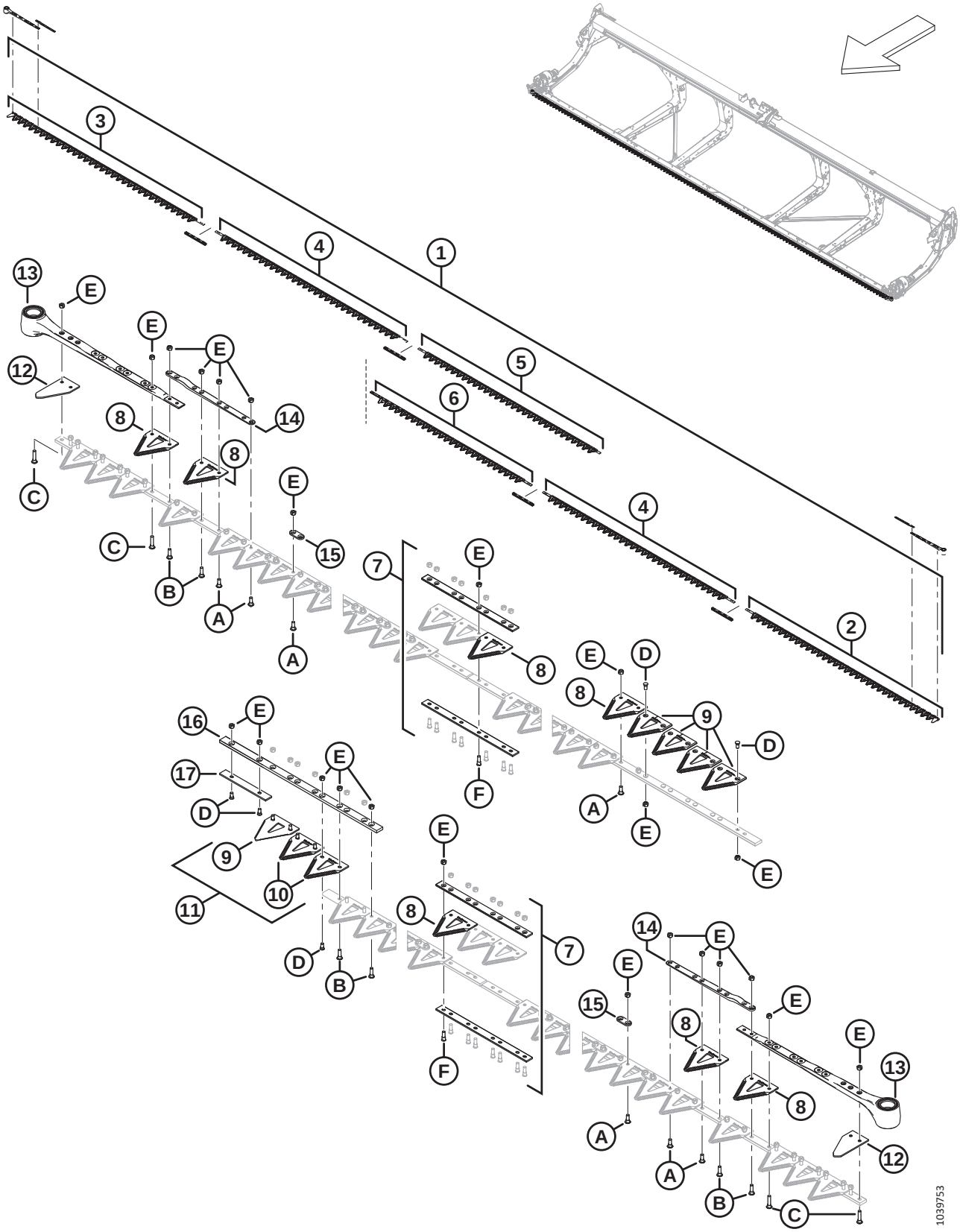
1039753

Ref	Part Number	Description	Qty	Serial Number
10	286464	SECTION – CLEARCUT COARSE BOTTOM CSK (10 PACK) [181]		
	286466	SECTION – CLEARCUT FINE BOTTOM CSK (10 PACK) [182]	OPT	
	286629	SECTION – CLEARCUT ULTRA COARSE BOTTOM CSK (10 PACK) [182]	OPT	
11	286861	KIT – CLEARCUT COARSE CENTER [183]		
	286862	KIT – CLEARCUT FINE CENTER [184]	OPT	
	286863	KIT – CLEARCUT ULTRA COARSE CENTER [185]	OPT	
12	226983	SECTION – END	2	
13	226941	KNIFE HEAD ASSEMBLY	2	
	115670	O-RING – 1.78 X 34.64		
	113937	DISC		
	113222	SEAL KIT		
	100500	BEARING – NEEDLE		
14	286440	BAR – FORGED	2	
15	286481	BAR – REINFORCEMENT (25 PACK) [186]	2	
16	286362	BAR – KNIFE OVERLAP GUIDE	1	
17	286363	BAR – WEAR	1	
A	286475	SCREW – M6 X 18 MM, C/W NUT (50 PACK)		
B	286476	SCREW – M6 X 22 MM, C/W NUT (25 PACK)		
C	286477	SCREW – M6 X 29 MM, C/W NUT (25 PACK)		
D	286478	SCREW – CSK M6 X 14 MM, C/W NUT (25 PACK)		
E	286479	NUT – CTR LOC CSK M6 X 1 (50 PACK)		
F	286621	SCREW – CSK M6 X 22 MM, C/W NUT (25 PACK)		

181. Quantities (individual sections): 2.
182. Quantities (individual sections): 2.
183. The kit includes five ClearCut™ coarse top CSK sections (NSS), two ClearCut™ coarse bottom CSK sections (NSS), and hardware.
184. The kit includes five ClearCut™ fine top CSK sections (NSS), two ClearCut™ fine bottom CSK sections (NSS), and hardware.
185. The kit includes five ClearCut™ ultra coarse top CSK sections (NSS), two ClearCut™ ultra coarse bottom CSK sections (NSS), and hardware.
186. Quantities (individual bars): 117.

40 Knife Drive – Single and Double Knife

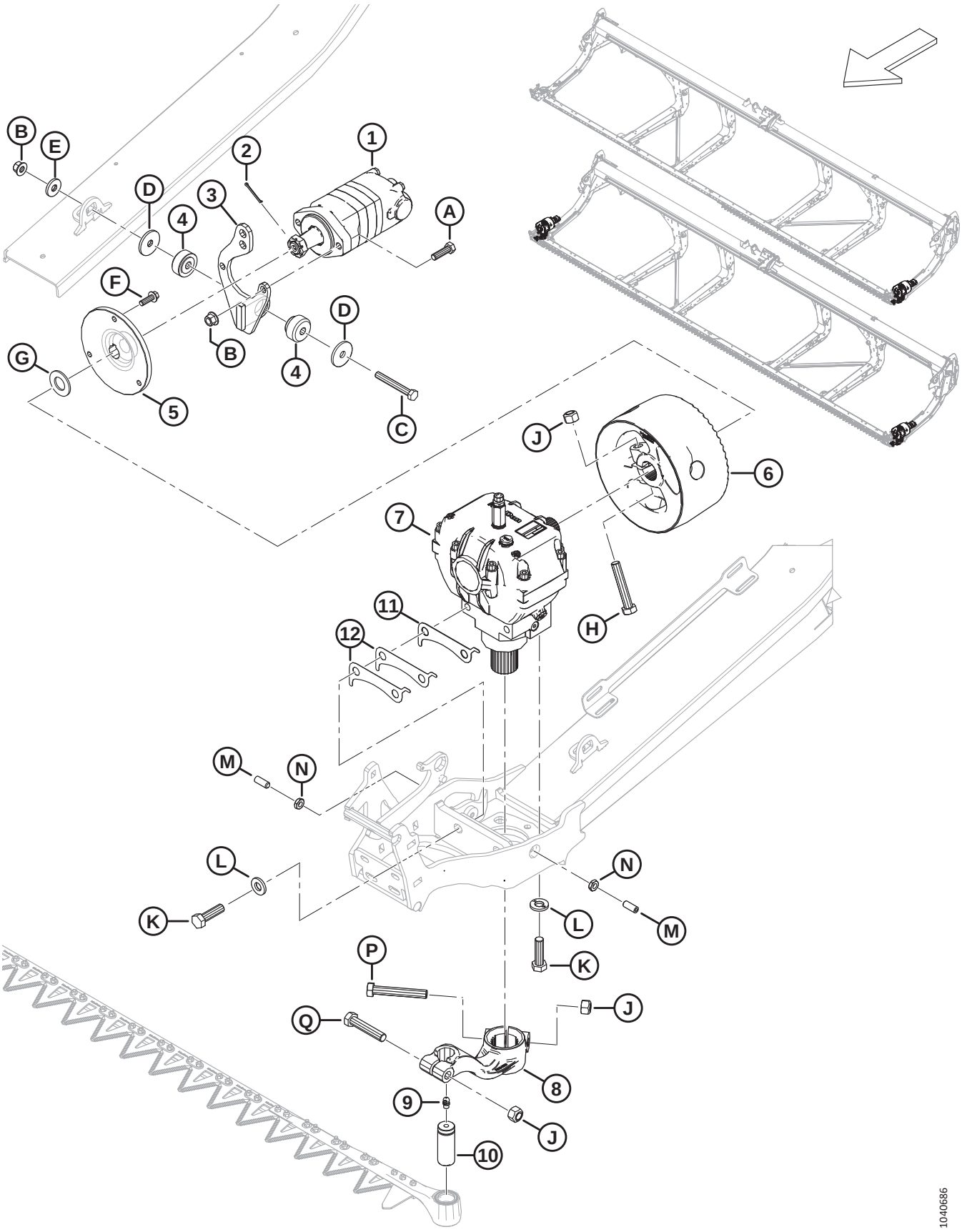

Ref	Part Number	Description	Qty	Serial Number
1	283002	MOTOR – EATON 2000 100 CC [187]	1	
	174304	SEAL KIT – EATON 2000 MOTOR		
	137375	NUT – SLTD JAM 1.0 -20 UNEF		
2	18606	PIN – COTTER 1/8 DIA X 1.5 ZP	1	
3	286826	SUPPORT – WELDT SAE-A MOTOR	1	
4	143107	BUSHING – RUBBER [188]	1	
5	286087	HUB – MACHINED	1	
6	286703	FLYWHEEL – KNIFE DRIVE C/W DECAL	1	
7	286089	DRIVE – KNIFE [189]	1	
8	226926	ARM – LH KNIFE DRIVE C/W DECAL	1	
	226927	ARM – RH KNIFE DRIVE C/W DECAL (DOUBLE KNIFE ONLY) [190]	1	
9	21194	FITTING – LUBRICATION 90° 1/8 NPT	1	
10	113229	PIN – SICKLE HEAD	1	
11	226400	SHIM – KNIFE DRIVE BOX, 1.2 MM [191]		
12	360870	SHIM – KNIFE DRIVE BOX, 0.6 MM [191]		
A	184669	BOLT – HEX HD M12 X 1.75 X 40-8.8-AA1J	2	
B	136431	NUT – HEX FLG CTR LOC M12 X 1.75-10	3	
C	184673	BOLT – HEX HD M12 X 1.75 X 90-10.9-AA1J	1	
D	11695	WASHER – FLAT	2	
E	4761	WASHER – FLAT	1	
F	184663	BOLT – HEX HD TFL M10 X 1.5 X 30-10.9-AA1J	3	
G	18603	WASHER – FLAT SAE 1 1/16 ID X 2.0 IN OD AA1J	1	
H	320214	BOLT – HEX HD M16 X 2 X 90-10.9-ZINC	1	
J	320026	NUT – HEX TOP LOCK M16 X 2-10-ZINC	3	
K	320311	BOLT – HEX HD M16 X 2 X 55-12.9-ZINC	4	
L	120901	WASHER – HARD L9 SPCL 5/8-82/85 HR 15N-AB0C	4	
M	320089	SCREW – SET M12 X 1.75 X 30 [192]	2	
N	184696	NUT – HEX THIN M12 X 1.75-05-AA1J	2	
P	320215	BOLT – HEX HD M16 X 2 X 100-10.9-ZINC	1	
Q	152602	BOLT – HEX HD M16 X 2 X 80-10.9-AA1J	1	

187. Motor includes seal kit (MD #174304), key, and slotted nut (MD #137375).
188. The rubber bushing (MD #143107) includes both halves shown in the illustration.
189. For repair parts, refer to Section *41 Knife Drive Box, page 99*.
190. Double-knife headers only.
191. Shim quantity varies for assembly clearances. Maximum allowable shims is four 1.2 mm shims (MD #226400) (or three 1.2 mm shims and two 0.6 mm shims [MD #360870]).
192. Set screw is used to adjust knife drive (MD #286089) left to right within the specified tolerance. Tighten lock nut (MD #184696) once knife drive has been adjusted correctly.

41 Knife Drive Box

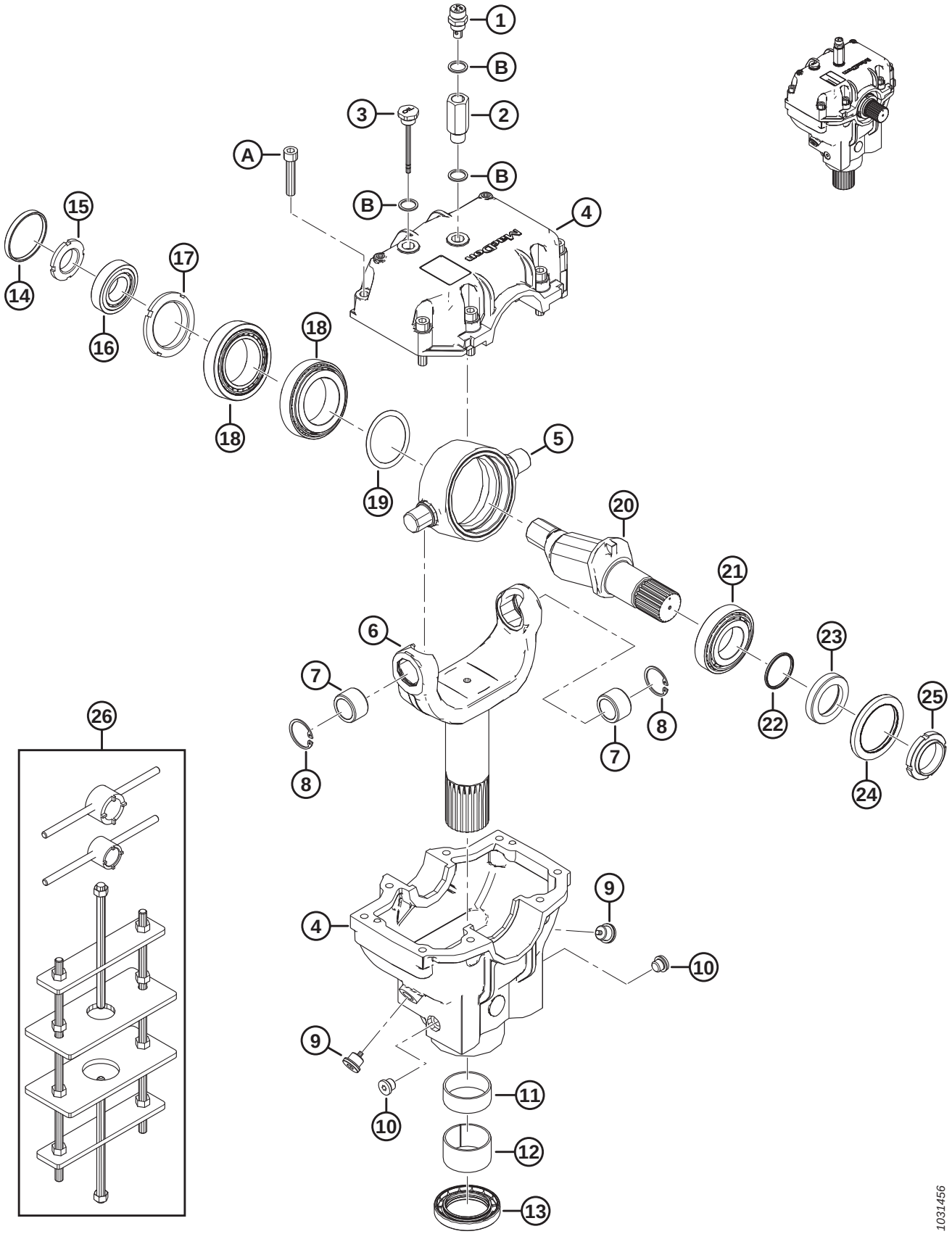

KNIFE DRIVE BOX

Ref	Part Number	Description	Qty	Serial Number
	286089	DRIVE – KNIFE		
1	286489	PLUG – BREATHER	1	
2	257089	EXTENSION	1	
3	286490	PLUG – LEVEL	1	
4	286485	CASTING – KNIFE DRIVE BOX [193]	1	
5	100721	PIVOT	1	
6	286483	YOKE	1	
7	100723	BUSHING – BRONZE	2	
8	100722	RING – RETAINING INTERNAL	2	
9	286488	PLUG – DRAIN	2	
10	252423	PLUG – DRAIN	2	
11	100726	BUSHING – STEEL	1	
12	286486	BUSHING – STEEL	1	
13	286445	SEAL – OIL	1	
14	100719	CAP – DUST	1	
15	100718	NUT – SPECIAL LOCK M30 X 1.5 CLASS 8.8	1	
16	100717	ASSSEMBLY – BEARING (CUP AND CONE)	1	
17	100715	NUT – SPECIAL LOCK M55 X 2 CLASS 8.8	1	
18	100720	ASSEMBLY – BEARING (CUP AND CONE)	2	
19	113152	KIT – SHIM	1	
20	100710	SHAFT	1	
21	100714	BEARING – ASSEMBLY CUP AND CONE	1	
22	100712	O-RING – 2.62 X 40.95	1	
23	102629	SPACER	1	
24	102630	SEAL – OIL (DOUBLE LIP)	1	
25	100709	NUT – SPECIAL M40 X 1.5 CLASS 8.8	1	
26	139003	KIT – WOBBLE BOX TOOL [194]	A/R	
A	113153	SCREW – HEX SOC HD M10 X 1.5 X 50-8.8-BO		
B	257054	WASHER – COPPER		

193. The knife drive box casting includes top and bottom knife drive box castings and eight screws (MD #113153).
194. The kit includes large socket tool, small socket tool, and wobble box jig frame.

42 Reel Support Arm and Lift Cylinders – Center Arm (FD230, FD235, FD240, and FD241)

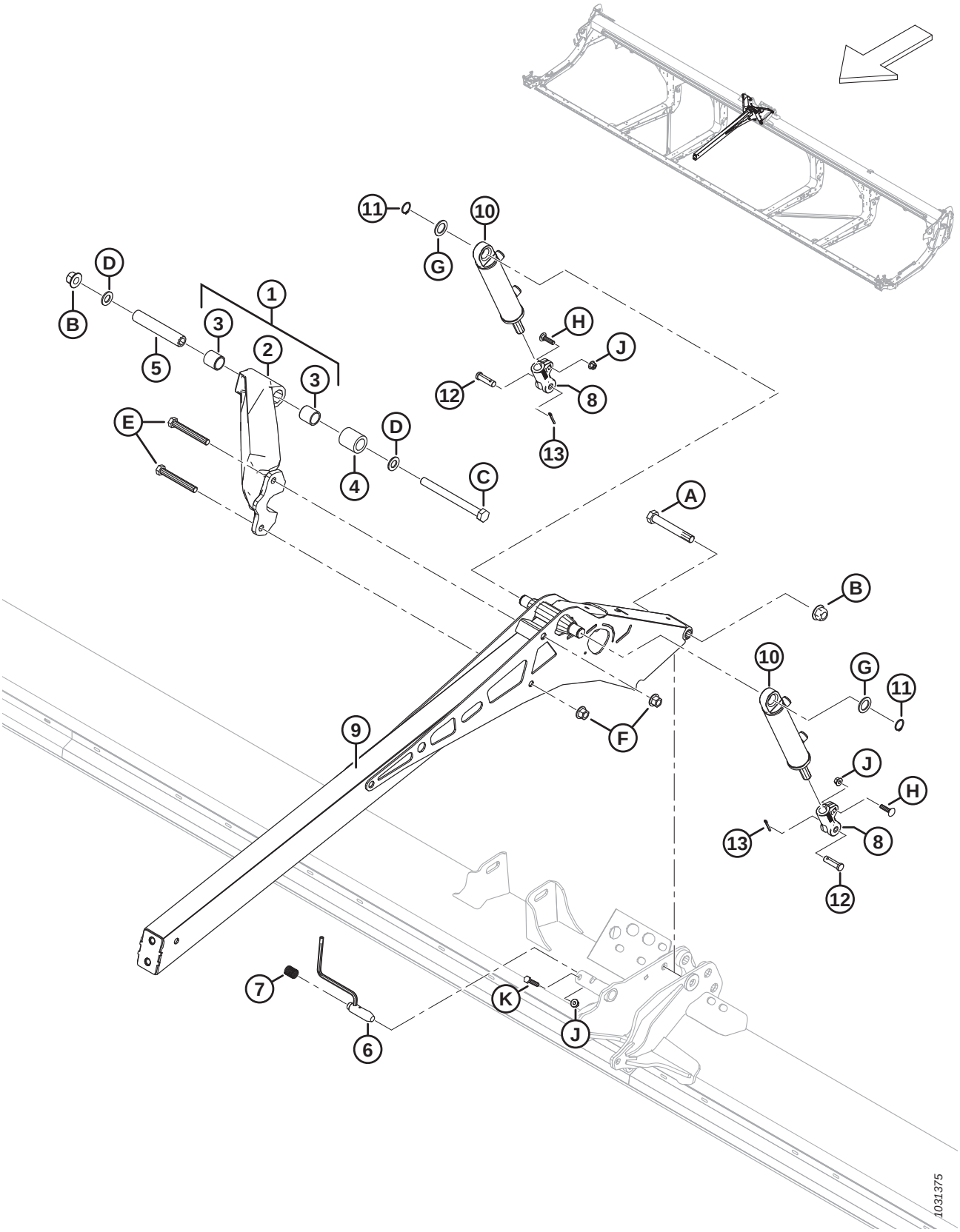

Ref	Part Number	Description	Qty	Serial Number
1	311627	BRACE – SUB ASSY C/W BUSHINGS [195]	1	
2	NSS	BRACE – MACHINED [196]	1	
3	311613	BUSHING	2	
4	311612	SPACER – BRACE REEL PIVOT	1	
5	311611	TUBE – PIVOT REEL BRACE	1	
6	273680	WELDT – PIN	1	
7	289880	SPRING – COMPRESSION	1	
8	273860	CLEVIS – CYL END MACHINED	2	
9	273795	ARM – CENTER WELDT	1	
10	273790	CYLINDER – HYD	2	
	311285	SEAL KIT		
11	30144	RING – EXT RETAINING	2	
12	18621	PIN – CLEVIS	2	
13	18648	PIN – COTTER 3/16 DIA X 1.25 ZP	2	
A	320196	BOLT – HEX HD M20 X 2.5 X 140-SPCL-10.9-ZINC		
B	136122	NUT – HEX FLG CTR LOC M20 X 2.5-10-AA1J		
C	252581	BOLT – HEX HD M20 X 2.5 X 220-10.9-AA1J		
D	136701	WASHER – NORDLOCK M20		
E	320168	BOLT – HEX HD M16 X 2 X 125-8.8-ZINC		
F	136440	NUT – HEX FLG CTR LK M16 X 2-10-AA1J		
G	156178	WASHER – THRUST		
H	152732	BOLT – RHSN M10 X 1.5 X 40-8.8-AA1J		
J	135799	NUT – HEX FLG CTR LOC M10 X 1.5-10		
K	30629	BOLT – HEX HD M10 X 1.5 X 50-8.8-A3L		

195. Includes machined brace (NSS) and two bushings (MD #311613).
196. Not sold separately; to service this part, order brace assembly complete with bushings (MD #311627).

43 Reel Support Arm and Lift Cylinders – Center Arm, Right Side (FD240, FD245, and FD250)

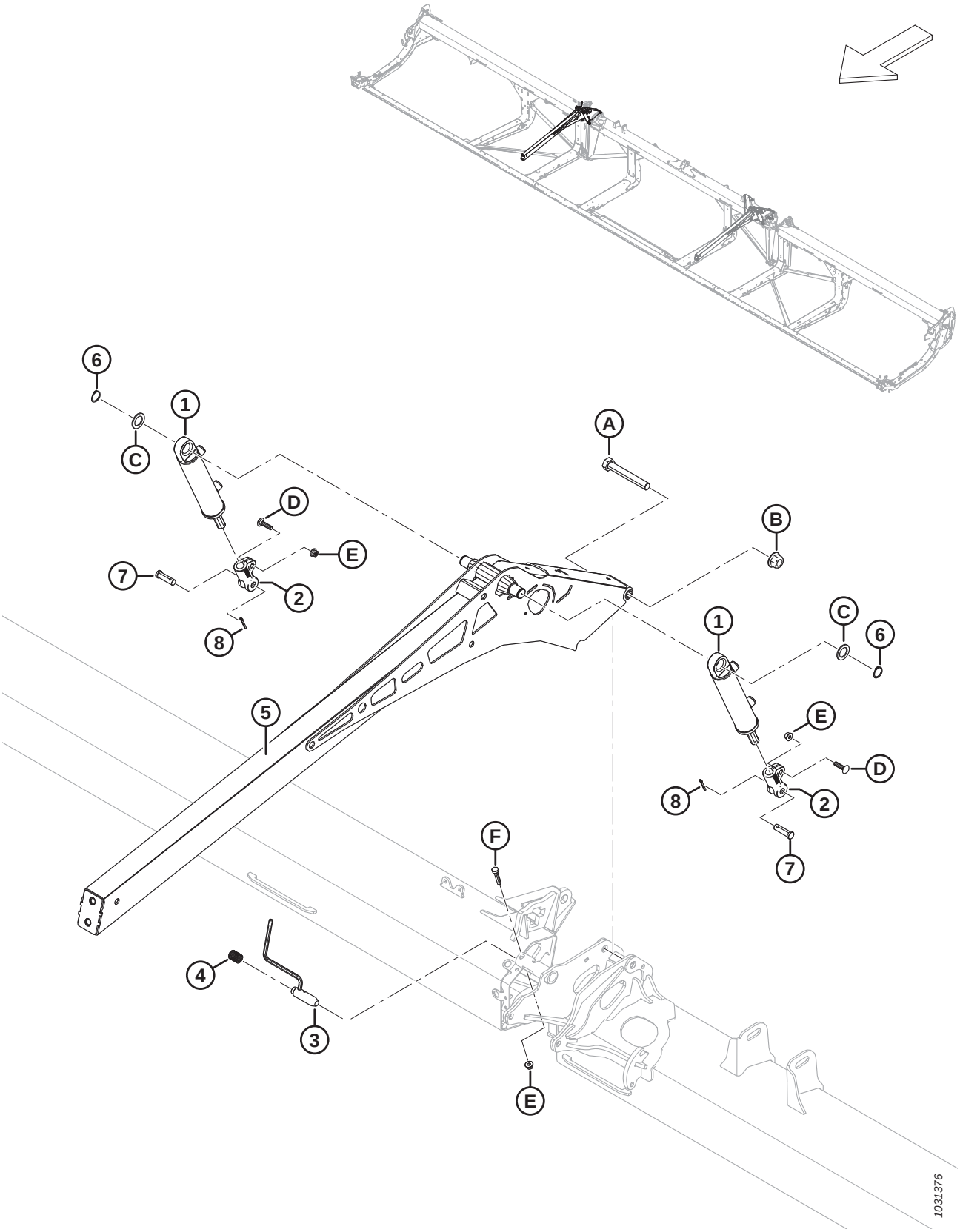

REEL SUPPORT ARM AND LIFT CYLINDERS – CENTER ARM, RIGHT SIDE (FD240, FD245, AND FD250)

Ref	Part Number	Description	Qty	Serial Number
1	273790	CYLINDER – HYD	2	
	311285	SEAL KIT		
2	273860	CLEVIS – CYL END MACHINED	2	
3	273680	WELDT – PIN	1	
4	289880	SPRING – COMPRESSION	1	
5	273795	ARM – CENTER WELDT	2	
6	30144	RING – EXT RETAINING	2	
7	18621	PIN – CLEVIS	2	
8	18648	PIN – COTTER 3/16 DIA X 1.25 ZP	2	
A	320196	BOLT – HEX HD M20 X 2.5 X 140-SPCL-10.9-ZINC	2	
B	136122	NUT – HEX FLG CTR LOC M20 X 2.5-10-AA1J	3	
C	156178	WASHER – THRUST	4	
D	152732	BOLT – RHSN M10 X 1.5 X 40-8.8-AA1J	4	
E	135799	NUT – HEX FLG CTR LOC M10 X 1.5-10	6	
F	30629	BOLT – HEX HD M10 X 1.5 X 50-8.8-A3L	2	

44 Reel Support Arm and Lift Cylinders – Center Arm, Left Side (FD240, FD245, and FD250)

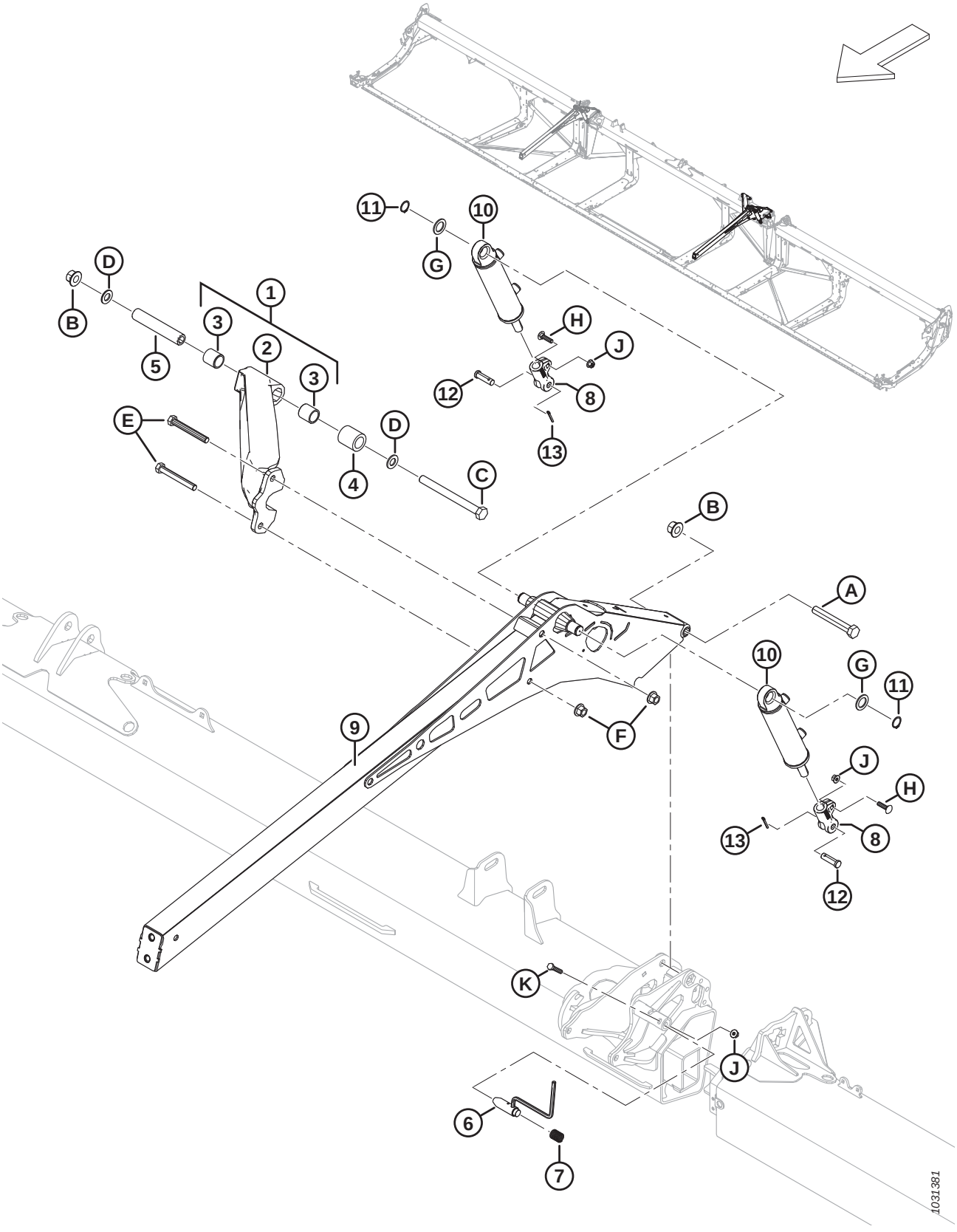

Ref	Part Number	Description	Qty	Serial Number
1	311627	BRACE – SUB ASSY C/W BUSHINGS [197]	1	
2	NSS	BRACE – MACHINED [198]	1	
3	311613	BUSHING	2	
4	311612	SPACER – BRACE REEL PIVOT	1	
5	311611	TUBE – PIVOT REEL BRACE	1	
6	273680	WELDT – PIN	1	
7	289880	SPRING – COMPRESSION	1	
8	273860	CLEVIS – CYL END MACHINED	2	
9	273795	ARM – CENTER WELDT	1	
10	273791	CYLINDER – HYD	2	
	313794	SEAL KIT		
11	30144	RING – EXT RETAINING	2	
12	18621	PIN – CLEVIS	2	
13	18648	PIN – COTTER 3/16 DIA X 1.25 ZP	2	
A	320196	BOLT – HEX HD M20 X 2.5 X 140-SPCL-10.9-ZINC		
B	136122	NUT – HEX FLG CTR LOC M20 X 2.5-10-AA1J		
C	252581	BOLT – HEX HD M20 X 2.5 X 220-10.9-AA1J		
D	136701	WASHER – NORDLOCK M20		
E	320168	BOLT – HEX HD M16 X 2 X 125-8.8-ZINC		
F	136440	NUT – HEX FLG CTR LK M16 X 2-10-AA1J		
G	156178	WASHER – THRUST		
H	152732	BOLT – RHSN M10 X 1.5 X 40-8.8-AA1J		
J	135799	NUT – HEX FLG CTR LOC M10 X 1.5-10		
K	30629	BOLT – HEX HD M10 X 1.5 X 50-8.8-A3L		

197. Assembly includes machined brace (NSS) and two bushings (MD #311613).
198. Not sold separately; to service this part, order brace assembly complete with bushings (MD #311627).

45 Reel Support Arm and Lift Cylinders – Outer Arms, Single Reel

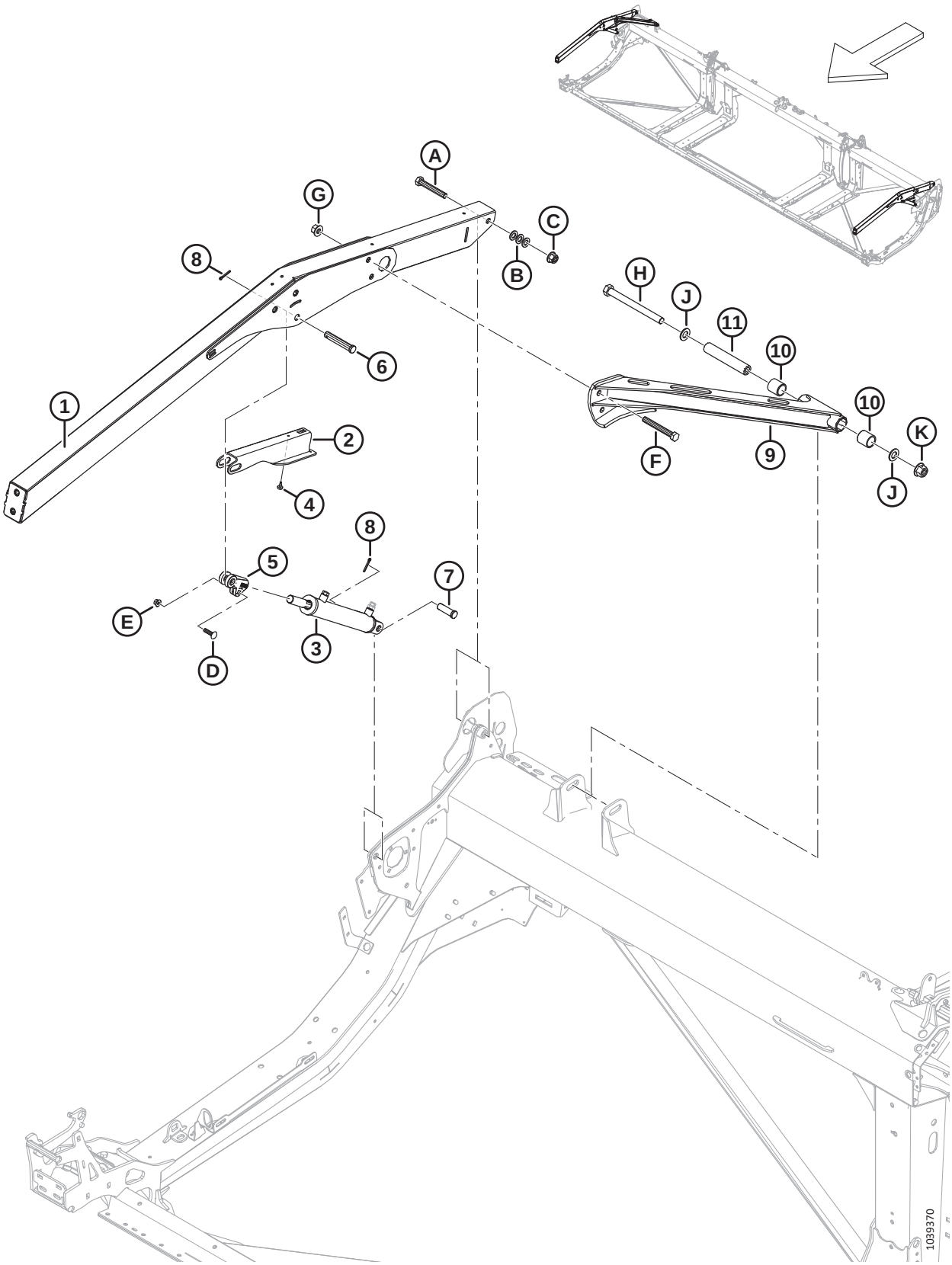

Ref	Part Number	Description	Qty	Serial Number
1	360035	ASSY – SR OUTER ARM W/ DECAL [199]	2	
2	340191	SUPPORT – REEL PROP	2	
3	273788	CYLINDER – HYD (RH) [200]	1	
	323687	SEAL KIT		
	273789	CYLINDER – HYD (LH) [200]	1	
	323688	SEAL KIT		
	174879	BREATHER – ORB #6		
4	273653	BUMPER – RUBBER	2	
5	228338	CLEVIS – CYL END MACHINED	2	
6	18629	PIN – CLEVIS	2	
7	18626	PIN – CLEVIS (RH) [201]	1	
	322970	PIN – CLEVIS 3/4 X 1-31/32 (LH) [201]	1	
8	18648	PIN – COTTER 3/16 DIA X 1.25 ZP	4	
9	340648	BRACE – SR W/ BUSHINGS [202]	1	
10	311613	BUSHING	2	
11	311611	TUBE – PIVOT REEL BRACE	1	
A	136310	BOLT – HEX HD M16 X 2 X 105-SPCL-8.8-AA1J		
B	184717	WASHER – FLAT REG M16-200HV-AA1J		
C	152520	NUT – HEX FLG TECH LK M16 X 2-10-AA1J		
D	152732	BOLT – RHSN M10 X 1.5 X 40-8.8-AA1J		
E	135799	NUT – HEX FLG CTR LOC M10 X 1.5-10		
F	320168	BOLT – HEX HD M16 X 2 X 125-8.8-AA1J		
G	136440	NUT – HEX FLG CTR LK M16 X 2-10-AA1J		
H	252581	BOLT – HEX HD M20 X 2.5 X 220-10.9-AA1J		
J	136701	WASHER – NORDLOCK M20		
K	136122	NUT – HEX FLG CTR LOC M20 X 2.5-10-AA1J		

199. Arm includes two reel entanglement hazard decals (MD #360541).
200. For RH cylinder (MD #273788), order seal kit (MD #323687); for LH cylinder (MD #273789), order seal kit (MD #323688).
201. To secure the RH cylinder to the right endsheet, use clevis pin (MD #18626); to secure the LH cylinder to the left endsheet, use clevis pin (MD #322970).
202. The brace includes two bushings (MD #311613).

46 Reel Support Arm and Lift Cylinders – Outer Arms, Double and Triple Reel

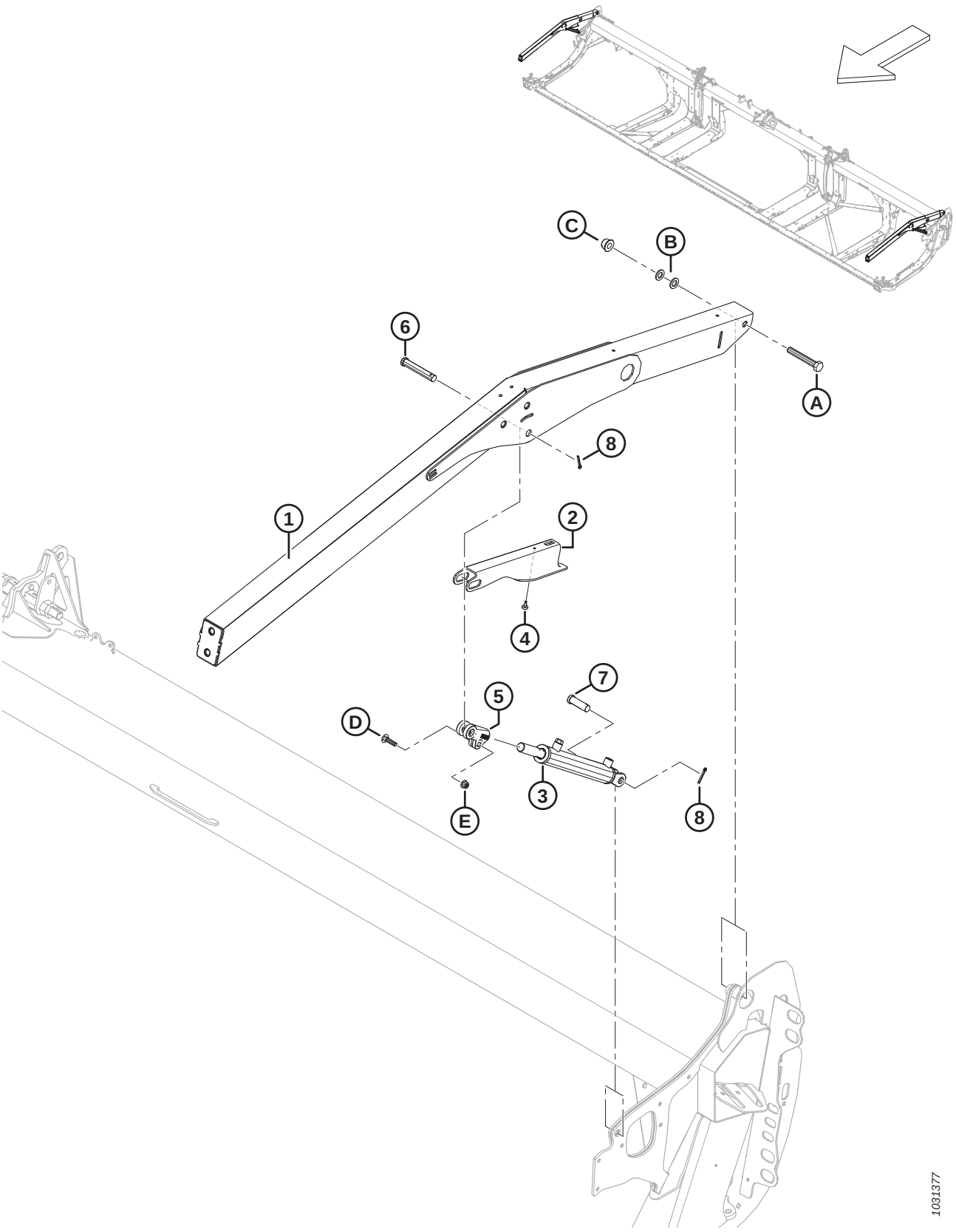

Ref	Part Number	Description	Qty	Serial Number
1	311949	ARM – OUTER W/ DECAL [203]	2	
2	340191	SUPPORT – REEL PROP	2	
3	273787	CYLINDER – HYD	2	
	311284	SEAL KIT		
	174879	BREATHER – ORB #6		
4	273653	BUMPER – RUBBER	2	
5	228338	CLEVIS – CYL END MACHINED	2	
6	18629	PIN – CLEVIS	2	
7	18626	PIN – CLEVIS	2	
8	18648	PIN – COTTER 3/16 DIA X 1.25 ZP	4	
A	136310	BOLT – HEX HD M16 X 2 X 105-SPCL-8.8-AA1J		
B	184717	WASHER – FLAT REG M16-200HV-AA1J		
C	152520	NUT – HEX FLG TECH LK M16 X 2-10-AA1J		
D	152732	BOLT – RHSN M10 X 1.5 X 40-8.8-AA1J		
E	135799	NUT – HEX FLG CTR LOC M10 X 1.5-10		

203. Arm includes two reel entanglement hazard decals (MD #360541).

47 Reel Arm Components – Right Arm, Single Reel (FD225)

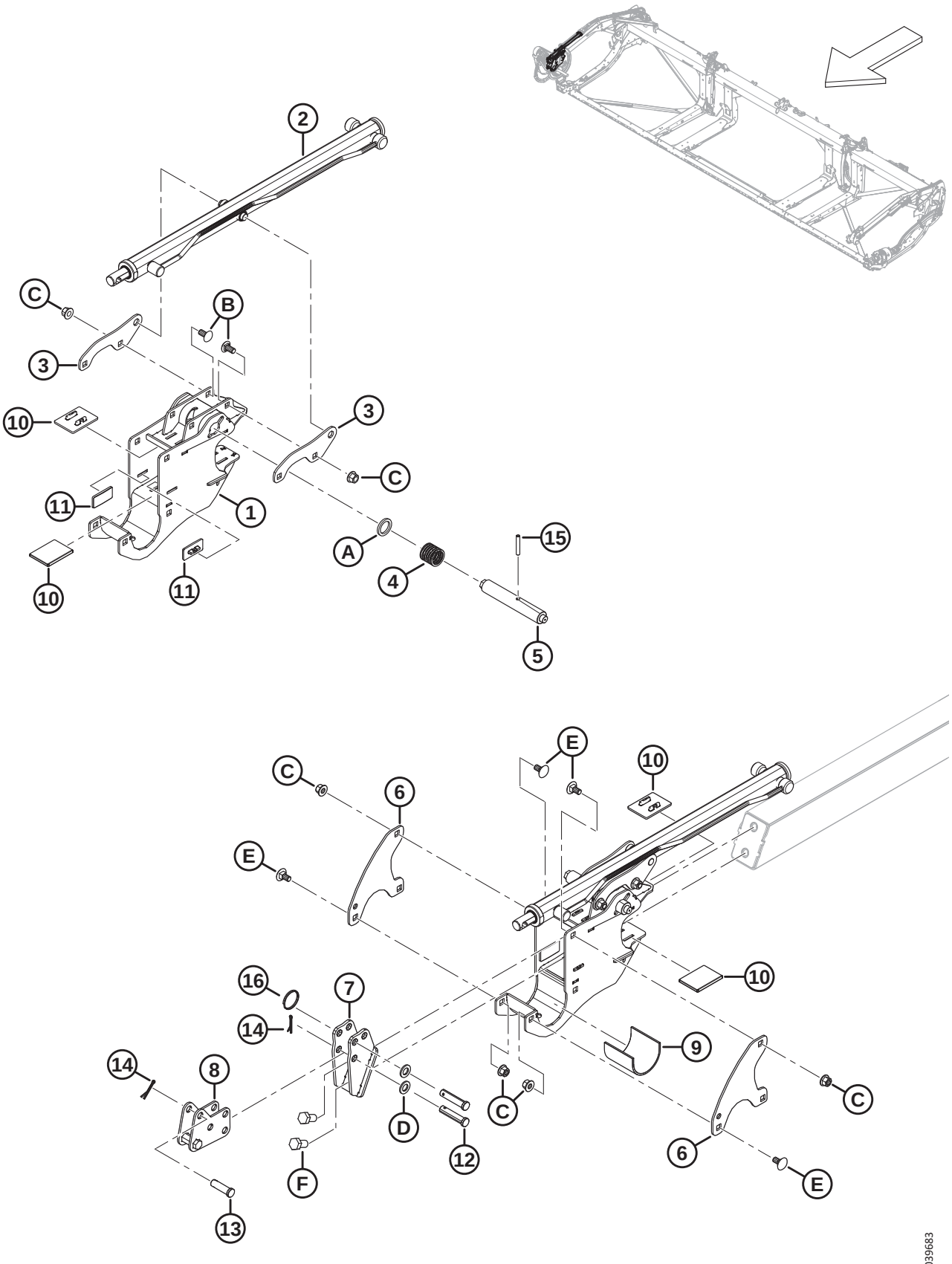

REEL ARM COMPONENTS – RIGHT ARM, SINGLE REEL (FD225)

Ref	Part Number	Description	Qty	Serial Number
1	340224	SUPPORT – REEL C/W DECAL	1	
2	273283	CYLINDER – FORE AFT [204]	1	
	313964	SEAL KIT		
3	273138	LUG	2	
4	273861	SPRING – COMP - LEFT HAND HELIX	1	
5	273278	PIN – CAM LATCH, DRIVES RH	1	
6	273122	PLATE – REEL RETAINER	2	
7	311237	SUPPORT – FRONT ANCHOR WELDT	1	
8	311238	ANCHOR – FORE AFT SUB WELDT	1	
9	228381	SLEEVE – REEL HUB SUPPORT	1	
10	273831	PAD – REEL DRIVE WEAR	4	
11	273777	PAD – REEL DRIVE WEAR	2	
12	18704	PIN – CLEVIS, 15 MM X 68 MM OAL	2	
13	18621	PIN – CLEVIS, 15 MM X 50 MM OAL	1	
14	18607	PIN – COTTER 5/32 DIA X 1.5 ZP	2	
15	16681	PIN – SPRING 5/16 DIA X 2.0 LG	1	
16	320207	RING – SPLIT	1	
A	273304	WASHER – CAM LATCH		
B	152439	BOLT – RHSSN M12 X 1.75 X 25-8.8-AA1J		
C	136431	NUT – HEX FLG CTR LOC M12 X 1.75-10		
D	184717	WASHER – FLAT REG M16-200HV-AA1J		
E	135903	BOLT – RHSN M12 X 1.75 X 25-8.8-ZINC		
F	136143	BOLT – HEX HD TFL M16 X 2 X 30-10.9-AA1J		

204. Right arm, single reel only.

48 Reel Arm Components – Right Arm, Double Reel (FD230, FD235, FD240, and FD241)

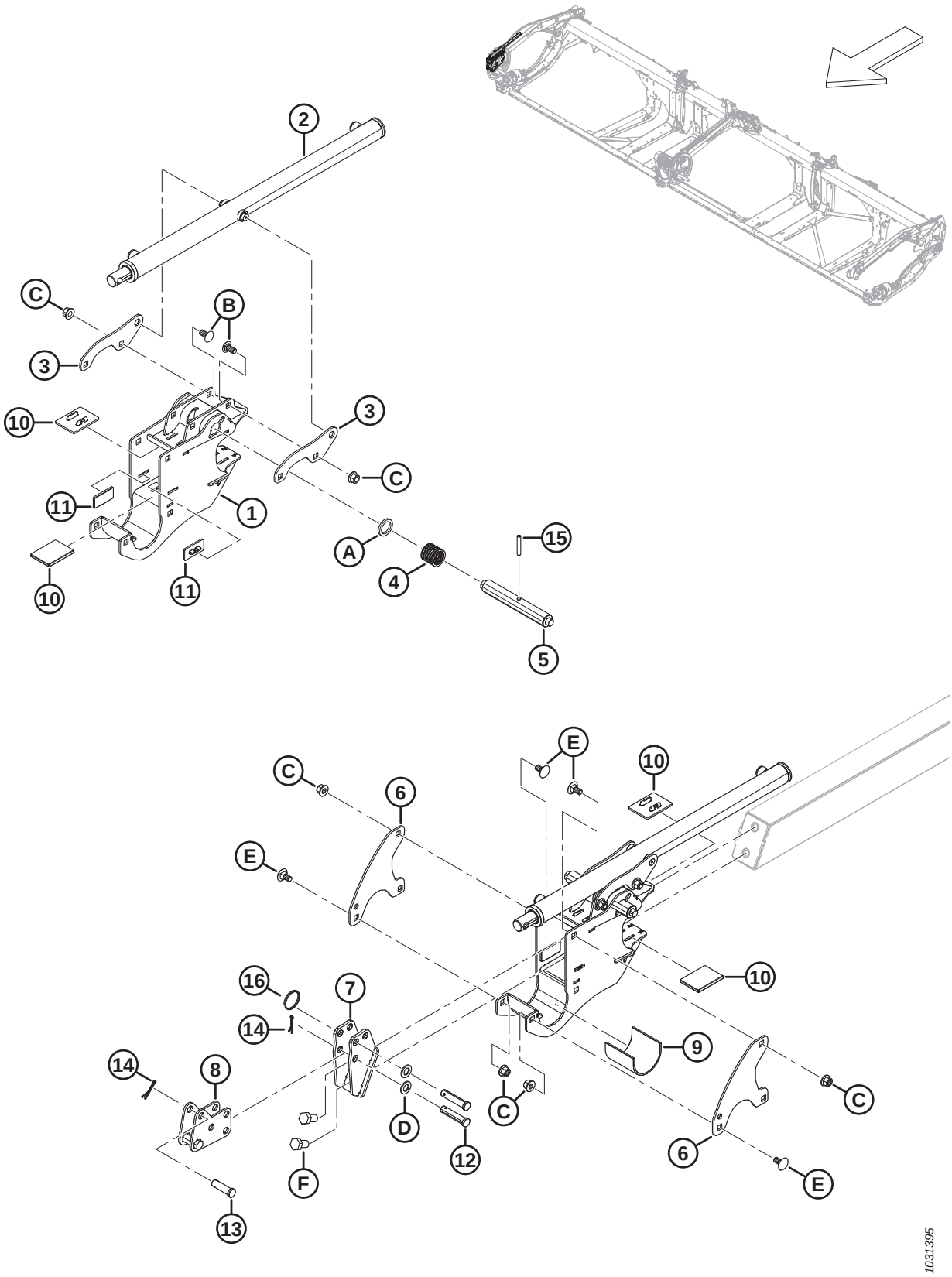

REEL ARM COMPONENTS – RIGHT ARM, DOUBLE REEL (FD230, FD235, FD240, AND FD241)

Ref	Part Number	Description	Qty	Serial Number
1	340224	SUPPORT – REEL CENTER C/W DECAL	1	
2	273284	CYLINDER – FORE AFT (RIGHT ARM ONLY)	1	
	313964	SEAL KIT		
3	273138	LUG	2	
4	273861	SPRING – COMP - LEFT HAND HELIX	1	
5	273281	PIN – CAM LATCH RH CAMS	1	
6	273122	PLATE – REEL RETAINER	2	
7	311237	SUPPORT – FRONT ANCHOR WELDT	1	
8	311238	ANCHOR – FORE AFT SUB WELDT	1	
9	228381	SLEEVE – REEL HUB SUPPORT	1	
10	273831	PAD – REEL DRIVE WEAR	4	
11	273777	PAD – REEL DRIVE WEAR	2	
12	18704	PIN – CLEVIS, 15 MM X 68 MM OAL	2	
13	18621	PIN – CLEVIS, 15 MM X 50 MM OAL	1	
14	18607	PIN – COTTER 5/32 DIA X 1.5 ZP	3	
15	16681	PIN – SPRING 5/16 DIA X 2.0 LG	1	
16	320207	RING – SPLIT	1	
A	273304	WASHER – CAM LATCH		
B	152439	BOLT – RHSSN M12 X 1.75 X 25-8.8-AA1J		
C	136431	NUT – HEX FLG CTR LOC M12 X 1.75-10		
D	184717	WASHER – FLAT REG M16-200HV-AA1J		
E	135903	BOLT – RHSN M12 X 1.75 X 25-8.8-ZINC		
F	136143	BOLT – HEX HD TFL M16 X 2 X 30-10.9-AA1J		

49 Reel Arm Components – Right Arm, Triple Reel (FD240, FD245, and FD250)

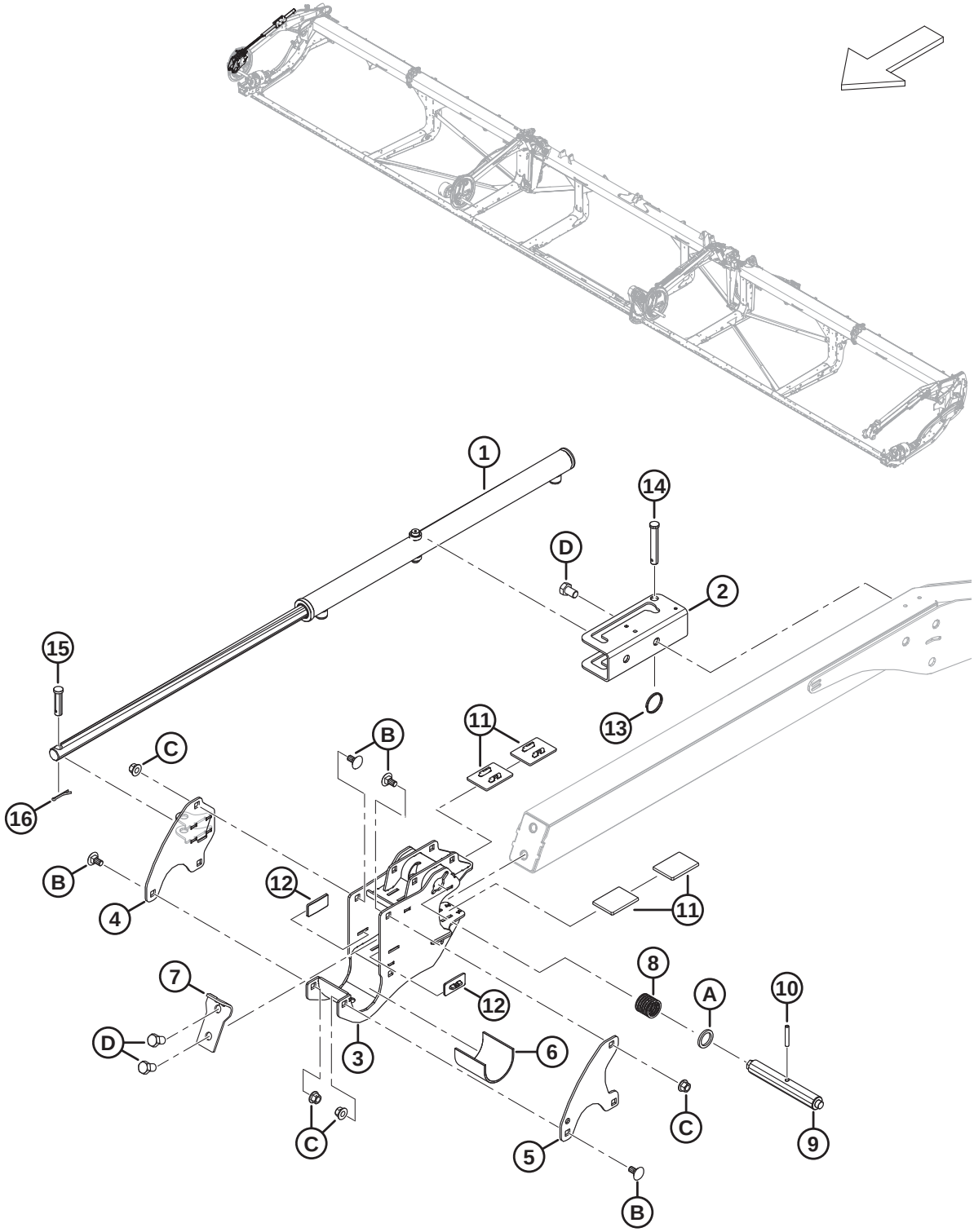

REEL ARM COMPONENTS – RIGHT ARM, TRIPLE REEL (FD240, FD245, AND FD250)

Ref	Part Number	Description	Qty	Serial Number
1	273284	CYLINDER – FORE AFT	1	
	313964	SEAL KIT		
2	273637	BRACKET – CYLINDER MOUNT	1	
3	340224	SUPPORT – REEL CENTER C/W DECAL	1	
4	340571	BRACKET WELDT – FORE AFT RH CAM	1	
5	273122	PLATE – REEL RETAINER	1	
6	228381	SLEEVE – REEL HUB SUPPORT	1	
7	311359	PLATE – STOP REEL	1	
8	273861	SPRING – COMP - LEFT HAND HELIX	1	
9	273281	PIN – CAM LATCH RH CAMS	1	
10	16681	PIN – SPRING 5/16 DIA X 2.0 LG	1	
11	273831	PAD – REEL DRIVE WEAR	4	
12	273777	PAD – REEL DRIVE WEAR	2	
13	320207	RING – SPLIT	1	
14	19958	PIN – CLEVIS	1	
15	103879	PIN – CLEVIS	1	
16	18607	PIN – COTTER 5/32 DIA X 1.5 ZP	1	
A	273304	WASHER – CAM LATCH		
B	135903	BOLT – RHSN M12 X 1.75 X 25-8.8-ZINC		
C	136431	NUT – HEX FLG CTR LOC M12 X 1.75-10		
D	136143	BOLT – HEX HD TFL M16 X 2 X 30-10.9-AA1J		

50 Reel Arm Components – Center Arm (FD230, FD235, FD240, FD241, FD245, and FD250)

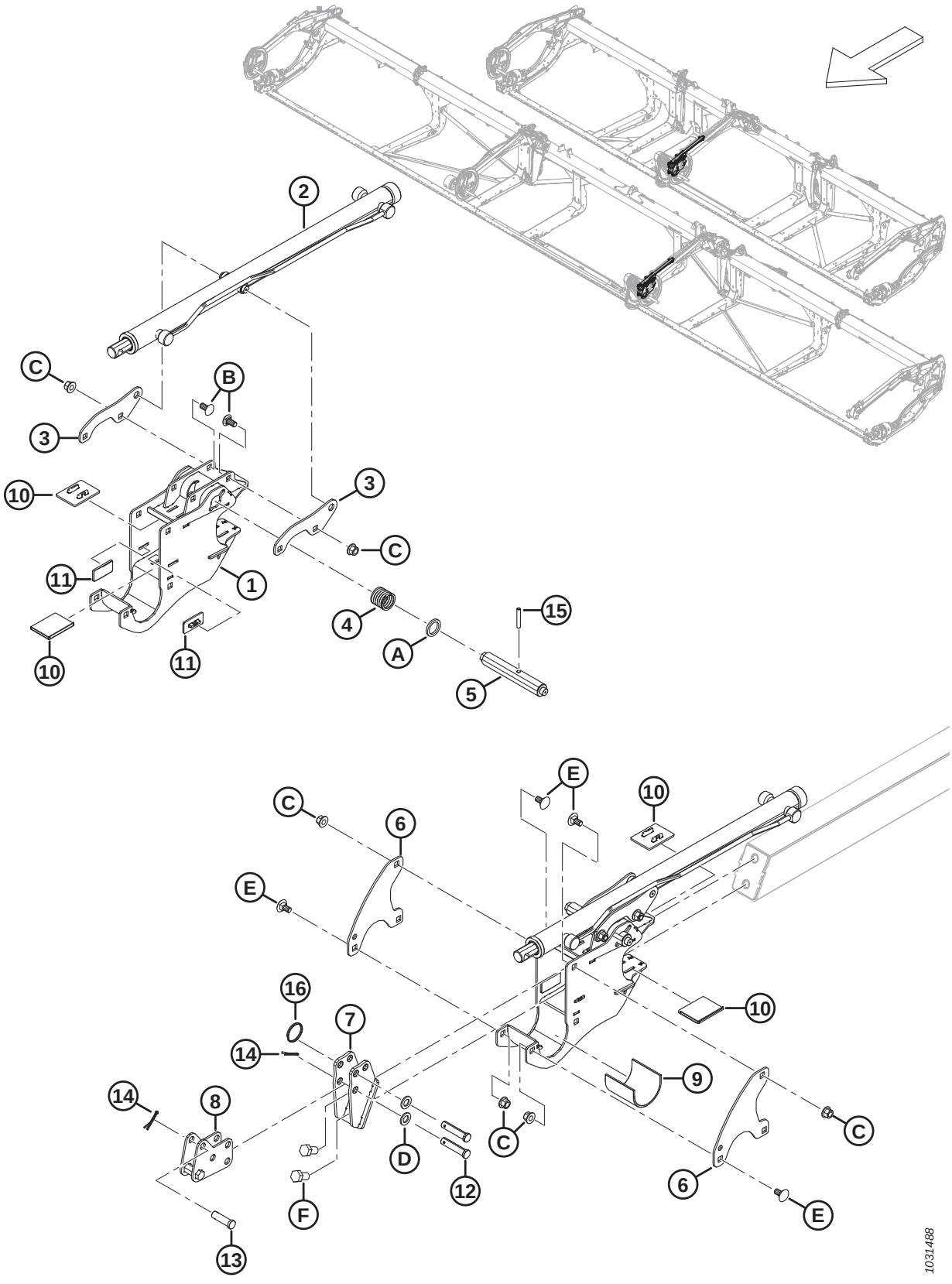

REEL ARM COMPONENTS – CENTER ARM (FD230, FD235, FD240, FD241, FD245, AND FD250)

Ref	Part Number	Description	Qty	Serial Number
1	340224	SUPPORT – REEL CENTER C/W DECAL	1	
2	273283	CYLINDER – FORE AFT	1	
	313964	SEAL KIT		
3	273138	LUG	2	
4	273861	SPRING – COMP - LEFT HAND HELIX	1	
5	273278	PIN – CAM LATCH-DRIVES AND RH CTR	1	
6	273122	PLATE – REEL RETAINER	2	
7	311237	SUPPORT – FRONT ANCHOR WELDT	1	
8	311238	ANCHOR – FORE AFT SUB WELDT	1	
9	228381	SLEEVE – REEL HUB SUPPORT	1	
10	273831	PAD – REEL DRIVE WEAR	4	
11	273777	PAD – REEL DRIVE WEAR	2	
12	18704	PIN – CLEVIS, 15 MM X 68 MM OAL	2	
13	18621	PIN – CLEVIS, 15 MM X 50 MM OAL	1	
14	18607	PIN – COTTER 5/32 DIA X 1.5 ZP	3	
15	16681	PIN – SPRING 5/16 DIA X 2.0 LG	1	
16	320207	RING – SPLIT	1	
A	273304	WASHER – CAM LATCH		
B	152439	BOLT – RHSSN M12 X 1.75 X 25-8.8-AA1J		
C	136431	NUT – HEX FLG CTR LOC M12 X 1.75-10		
D	184717	WASHER – FLAT REG M16-200HV-AA1J		
E	135903	BOLT – RHSN M12 X 1.75 X 25-8.8-ZINC		
F	136143	BOLT – HEX HD TFL M16 X 2 X 30-10.9-AA1J		

51 Reel Arm Components – Center Right Arm, Triple Reel (FD240, FD245, and FD250)

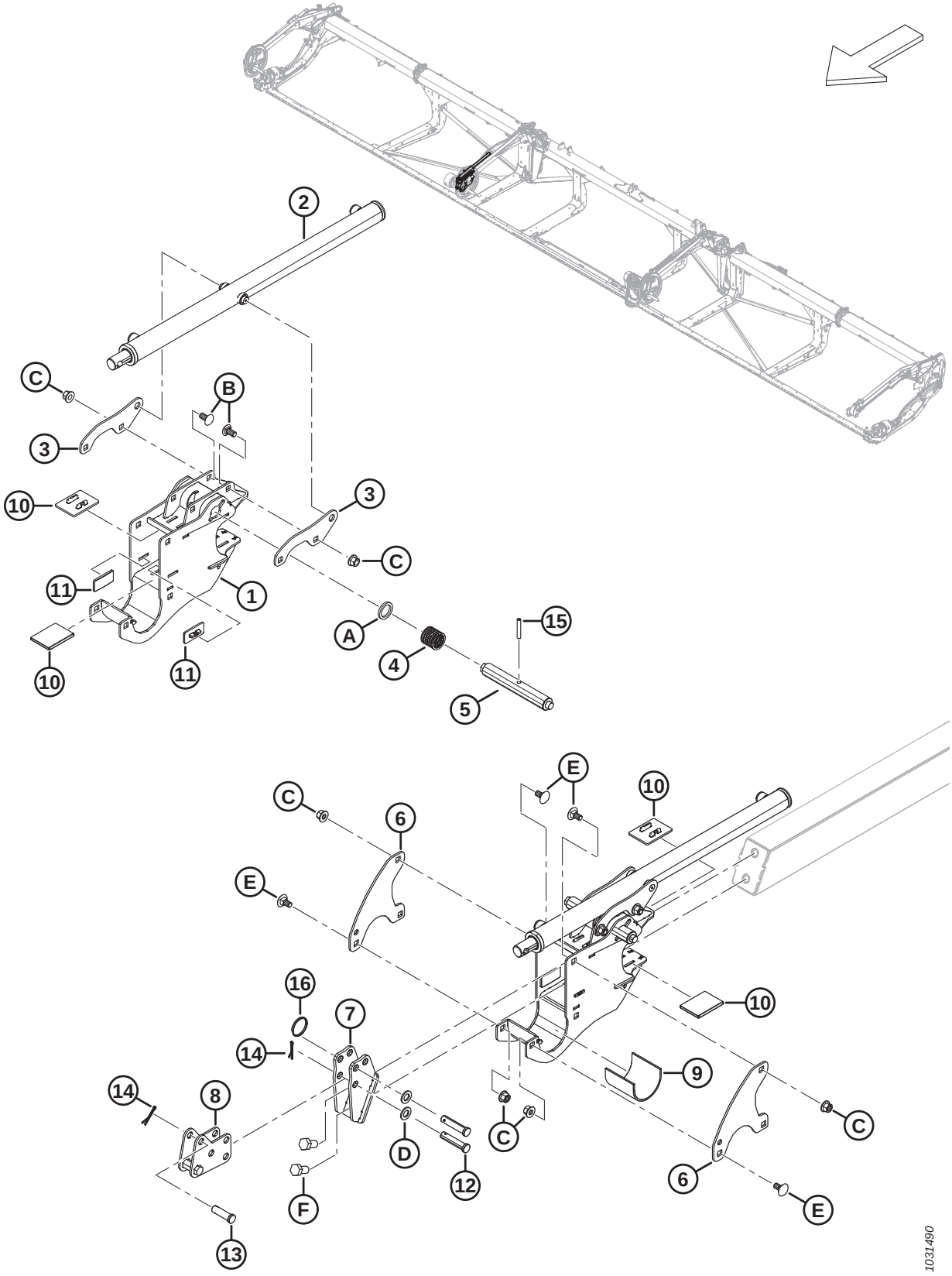

REEL ARM COMPONENTS – CENTER RIGHT ARM, TRIPLE REEL (FD240, FD245, AND FD250)

Ref	Part Number	Description	Qty	Serial Number
1	340224	SUPPORT – REEL CENTER C/W DECAL	1	
2	273284	CYLINDER – FORE AFT	1	
	313964	SEAL KIT		
3	273138	LUG	2	
4	273861	SPRING – COMP - LEFT HAND HELIX	1	
5	273278	PIN – CAM LATCH-DRIVES AND RH CTR	1	
6	273122	PLATE – REEL RETAINER	2	
7	311237	SUPPORT – FRONT ANCHOR WELDT	1	
8	311238	ANCHOR – FORE AFT SUB WELDT	1	
9	228381	SLEEVE – REEL HUB SUPPORT	1	
10	273831	PAD – REEL DRIVE WEAR	4	
11	273777	PAD – REEL DRIVE WEAR	2	
12	18704	PIN – CLEVIS, 15 MM X 68 MM OAL	2	
13	18621	PIN – CLEVIS, 15 MM X 50 MM OAL	1	
14	18607	PIN – COTTER 5/32 DIA X 1.5 ZP	3	
15	16681	PIN – SPRING 5/16 DIA X 2.0 LG	1	
16	320207	RING – SPLIT	1	
A	273304	WASHER – CAM LATCH		
B	152439	BOLT – RHSSN M12 X 1.75 X 25-8.8-AA1J		
C	136431	NUT – HEX FLG CTR LOC M12 X 1.75-10		
D	184717	WASHER – FLAT REG M16-200HV-AA1J		
E	135903	BOLT – RHSN M12 X 1.75 X 25-8.8-ZINC		
F	136143	BOLT – HEX HD TFL M16 X 2 X 30-10.9-AA1J		

52 Reel Arm Components – Left Arm (FD225, FD230, FD235, FD240, FD241, FD245, and FD250)

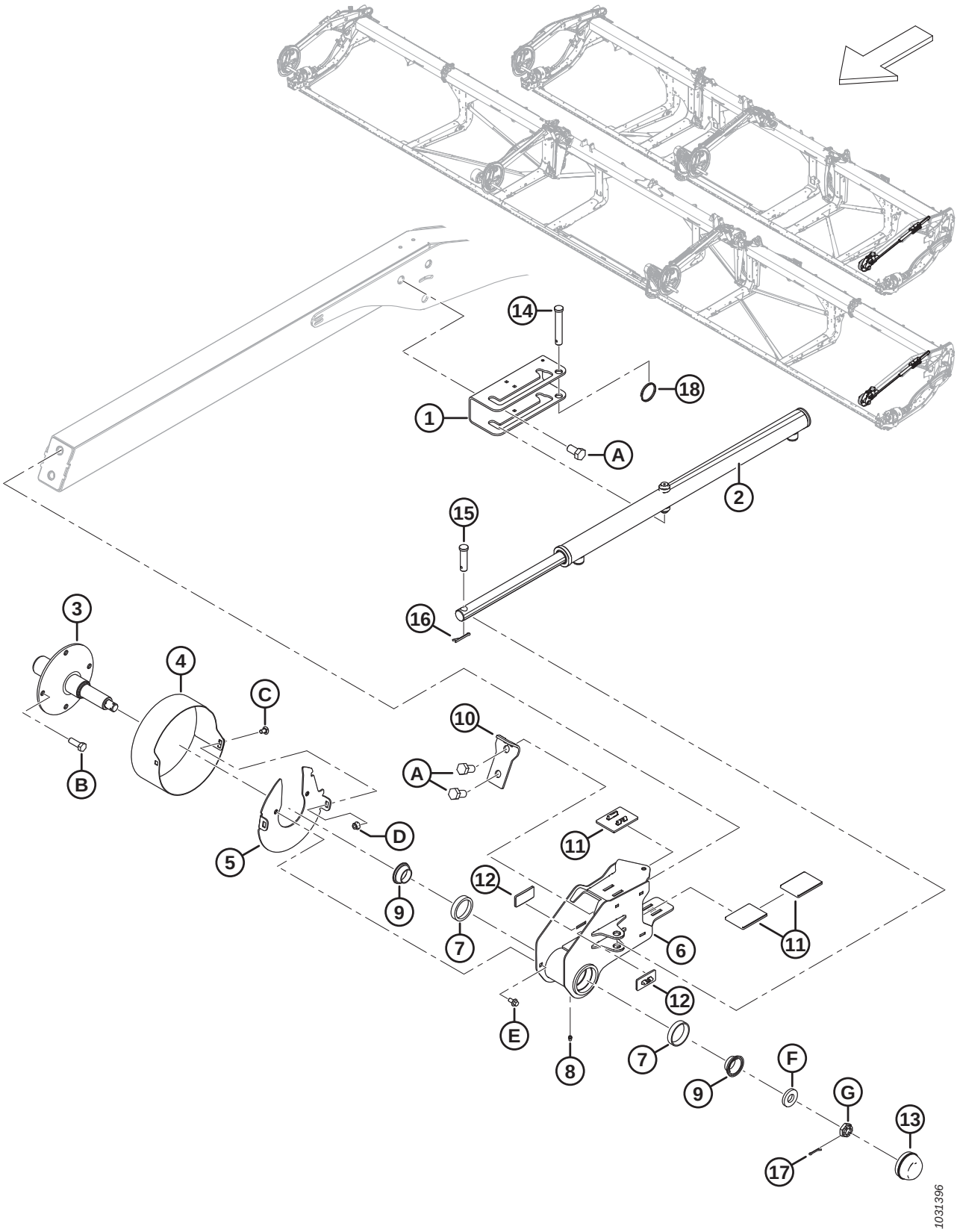

REEL ARM COMPONENTS – LEFT ARM (FD225, FD230, FD235, FD240, FD241, FD245, AND FD250)

Ref	Part Number	Description	Qty	Serial Number
1	273637	BRACKET – CYLINDER MOUNT	1	
2	273284	CYLINDER – FORE AFT	1	
	313964	SEAL KIT		
3	228322	SHAFT – TAIL MACHINED	1	
4	273309	SHIELD – LH REEL TAIL END	1	
5	311632	DISC – WELDMENT	1	
6	273772	TAIL END REEL SUPPORT – C/W CUPS [205]	1	
7	164215	BEARING – CUP ROLLER	2	
8	18671	FITTING – LUBE 1/4 - 28 UNF	1	
9	164216	BEARING – CONE C/W SEAL	2	
10	311359	PLATE – STOP REEL	1	
11	273831	PAD – REEL DRIVE WEAR	3	
12	273777	PAD – REEL DRIVE WEAR	2	
13	30520	CAP – DUST	1	
14	19958	PIN – CLEVIS	1	
15	103879	PIN – CLEVIS	1	
16	18607	PIN – COTTER 5/32 DIA X 1.5 ZP	2	
17	18605	PIN – COTTER 1/8 DIA X 1 ZP	1	
18	320207	RING – SPLIT	1	
A	136143	BOLT – HEX HD TFL M16 X 2 X 30-10.9-AA1J		
B	152730	BOLT – HEX HD TFL M12 X 1.75 X 35-10.9-AA1J		
C	191489	BOLT – RHSSN TFL M8 X 1.25 X 16-8.8-AA1J		
D	135337	NUT – HEX FLG CTR LK M8 X 1.25-8-AA1J		
E	136485	BOLT – HEX FLG HD TFL M8 X 1.25 X 16-8.8-AA1J		
F	16235	WASHER – FLAT		
G	136445	NUT – HEX SLTD FINE M20 X 1.5-SPCL-22HA-ZINC		

205. The tail end reel support includes lube fitting (MD #18671) and two cup roller bearings (MD #164215).

53 Reel – Drive, Right Arm, Single Reel

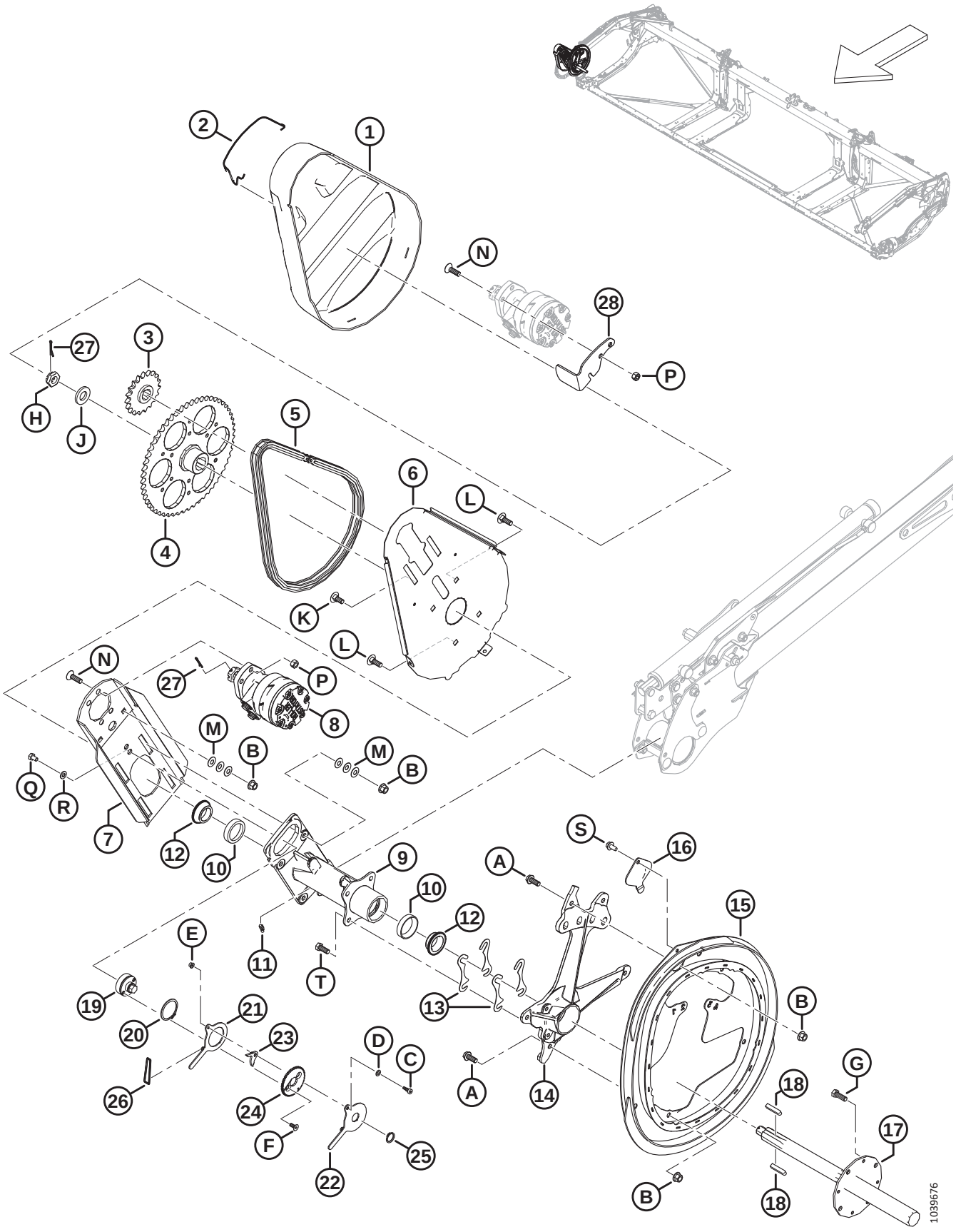

Ref	Part Number	Description	Qty	Serial Number
1	228614	COVER – REEL DRIVE SR	1	
2	228611	SPRING – REEL DRIVE COVER	1	
3	273875	SPROCKET – RC 60, 19 TOOTH	1	
4	228299	SPROCKET – MACHINING 56 TOOTH	1	
5	273907	CHAIN – RC 60 ENDLESS 76 LINKS	1	
	273963	CHAIN – RC C/W CONNECTOR 76 LINKS	OPT	
6	228604	SUPPORT – REEL DRIVE BACKPLATE	1	
7	360144	PLATE – MOTOR MOUNT W/ GRAPHITE	1	
8	273258	MOTOR – HYD-15.9 CU.IN. 506 SERIES [206]	1	
	273259	SEAL KIT [207]		
	273078	MOTOR – HYD-260 CC HIGH CAPACITY BEARING [208]	OPT	
	311620	SEAL KIT [209]		
	137375	NUT – SLTD JAM 1.0-20 UNEF		
9	273758	HUB – REEL DRIVE [210]	1	
10	164214	BEARING – CUP	2	
11	21301	FITTING – LUBRICATION	1	
12	164213	BEARING – CONE C/W SEAL	2	
13	164061	SHIM – HUB TO CAM	4	
14	228292	SUPPORT – CAM MACHINING	1	
15	273926	CAM – WELDMENT	1	
16	137476	COVER – CAM BEARING ACCESS	1	
17	228301	SHAFT – REEL DRIVE MACHINED	1	
18	137721	KEY – REEL DRIVE SHAFT	2	
19	228460	TIGHTENER – CHAIN	1	
20	111521	RING – RETAINING	1	
21	228478	ARM – INNER	1	
22	228479	ARM – OUTER	1	
23	228485	LATCH	1	
24	228477	DISC – LOCK	1	
25	191353	RING – RETAINING EXTERNAL	1	
26	136882	O-RING – 3.5 X 40.5	1	
27	18607	PIN – COTTER 5/32 DIA X 1.5 ZP	2	
28	360186	RETAINER – COVER	1	
A	320180	BOLT – HEX FLG HD M12 X 1.75 X 30-SPCL-8.8-AA1J		
B	136431	NUT – HEX FLG CTR LOC M12 X 1.75-10		
C	197135	SCREW – HEX SOC HD SHLDR M8 X 10		
D	184708	WASHER – FLAT M8-200HV-AA1J		
E	152668	NUT – HEX FLG CTR LOC M6 X 1-8		
F	136592	SCREW – HEX SOC CSK HD TFL M8 X 1.25 X 20-8.8-ZINC		
G	152730	BOLT – HEX HD TFL M12 X 1.75 X 35-10.9-AA1J		

206. Standard factory-installed motor.
207. Seal kit for standard motor (MD #273258).
208. Optional high capacity motor for high reel loads.
209. Seal kit for optional high capacity motor (MD #273078).
210. Hub includes two cup bearings (MD #164214) and lubrication fitting (MD #21301).

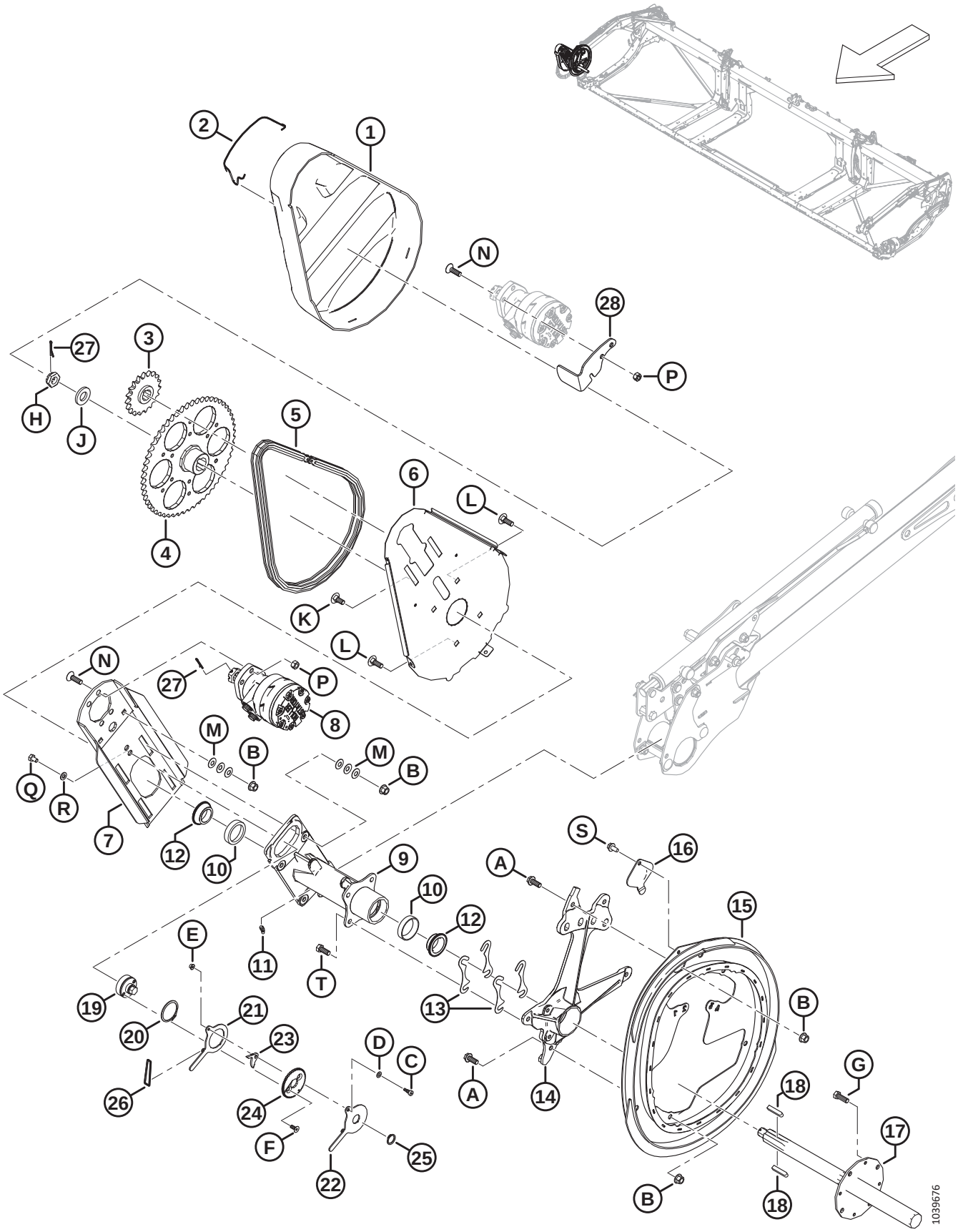
1
2
3
4
5
6
7
8
9
10
11
12
13
14
15
16
17
18
19
20
21
22
23
24
25
26
27
28
A
B
C
D
E
F
G
H
J
K
L
M
N
P
Q
R
S
T
1039676

Ref	Part Number	Description	Qty	Serial Number
H	136446	NUT – HEX SLTD FINE M24 X 1.5-SPCL-22HA-ZINC		
J	31774	WASHER – FLAT 1-1/8-30HRC-AC0C		
K	184667	BOLT – RHSN M12 X 1.75 X 30-8.8-ZINC		
L	136291	BOLT – RHSN TFL M12 X 1.75 X 35-8.8-ZINC		
M	136702	WASHER – CON SPRING M12-ZINC		
N	136401	SCREW – CSK HEX SOC M12 X 1.75 X 40-10.9-AA1J		
P	136759	NUT – HEX CTR LOC M12 X 1.75-8-AA1J		
Q	136842	BOLT – HEX HD TFL M10 X 1.5 X 16-8.8-ZINC		
R	30655	WASHER – HARD M10-340HV-AB0C		
S	136209	SCREW – HEX WSHR M10 X 1.5X20-450HV		
T	30630	BOLT – HEX HD TFL M12 X 1.75 X 30-8.8-A3L		

54 Reel – Drive, Center Arm, Double and Triple Reel

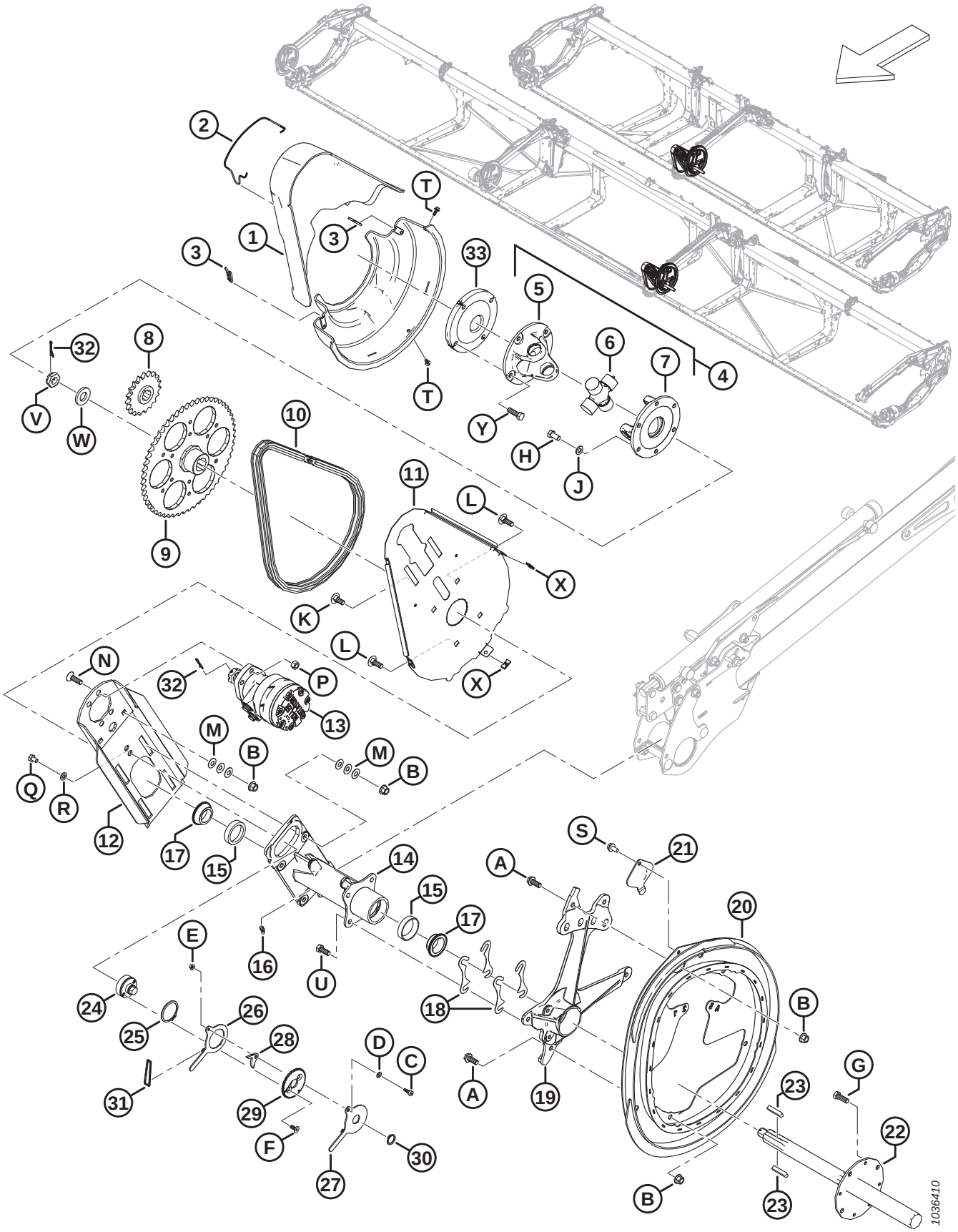

Ref	Part Number	Description	Qty	Serial Number
1	228619	COVER SET – CENTER REEL DRIVE [211]	1	
2	228611	SPRING – REEL DRIVE COVER	1	
3	228848	CLIP – COVER DUAL REEL DRIVE	2	
4	228382	REEL DRIVE U-JOINT [212]	1	
5	228384	YOKE – FLANGE 4 BOLT	1	
6	137825	CROSS JOURNAL ASSEMBLY	1	
7	228385	YOKE – FLANGE 6 BOLT	1	
8	273875	SPROCKET – RC 60, 19 TOOTH	1	
9	228299	SPROCKET – MACHINING 56 TOOTH	1	
10	273907	CHAIN – RC 60 ENDLESS 76 LINKS	1	
	273963	CHAIN – RC C/W CONNECTOR 76 LINKS	OPT	
11	228604	SUPPORT – REEL DRIVE BACKPLATE	1	
12	340216	PLATE – MOTOR MOUNT W/ GRAPHITE	1	
13	273258	MOTOR – HYD-15.9 CU.IN. 506 SERIES [213]	1	
	273259	SEAL KIT [214]		
	273078	MOTOR – HYD-260 CC HIGH CAPACITY BEARING [215]	OPT	
	311620	SEAL KIT [216]		
	137375	NUT – SLTD JAM 1.0-20 UNEF		
14	273758	HUB – REEL DRIVE [217]	1	
15	164214	BEARING – CUP	2	
16	21301	FITTING – LUBRICATION	1	
17	164213	BEARING – CONE C/W SEAL	2	
18	164061	SHIM – HUB TO CAM	4	
19	228292	SUPPORT – CAM MACHINING	1	
20	273926	CAM – WELDMENT	1	
21	137476	COVER – CAM BEARING ACCESS	1	
22	228301	SHAFT – REEL DRIVE MACHINED	1	
23	137721	KEY – REEL DRIVE SHAFT	2	
24	228460	TIGHTENER – CHAIN	1	
25	111521	RING – RETAINING	1	
26	228478	ARM – INNER	1	
27	228479	ARM – OUTER	1	
28	228485	LATCH	1	
29	228477	DISC – LOCK	1	
30	191353	RING – RETAINING EXTERNAL	1	
31	136882	O-RING – 3.5 X 40.5	1	
32	18607	PIN – COTTER 5/32 DIA X 1.5 ZP	2	

211. Set includes upper and lower drive reel covers.
212. U-joint includes cross journal assembly (MD #137825), four bolt flange yoke (MD #228384), and six bolt flange yoke (MD #228385).
213. Standard factory-installed motor.
214. Seal kit for standard motor (MD #273258).
215. Optional high capacity motor for high reel loads.
216. Seal kit for optional high capacity motor (MD #273078).
217. Hub includes two cup bearings (MD #164214) and lubrication fitting (MD #21301).

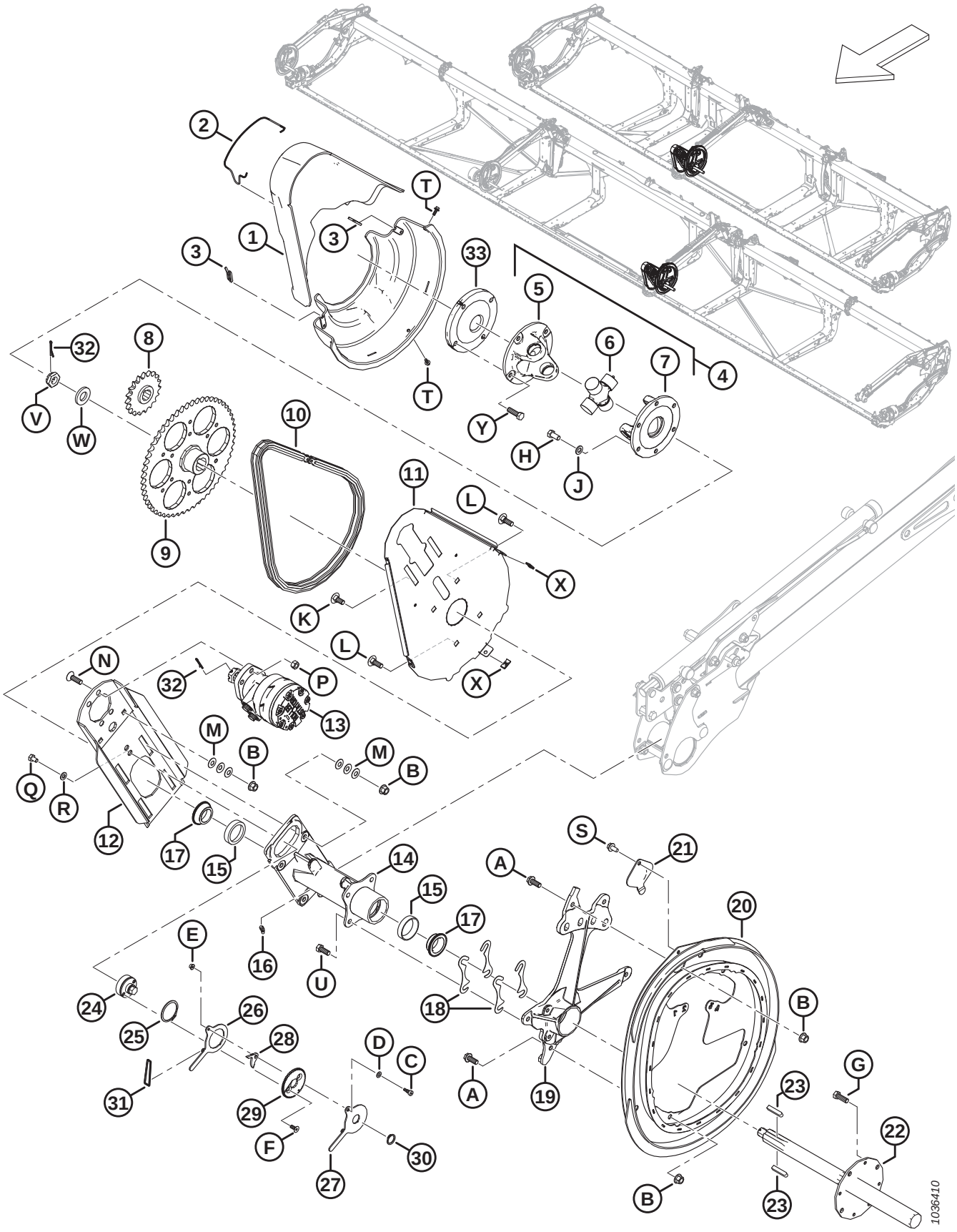
1036410

Ref	Part Number	Description	Qty	Serial Number
33	273576	DISC – SHIM TRIPLE REEL [218]	1	
A	320180	BOLT – HEX FLG HD M12 X 1.75 X 30-SPCL-8.8-AA1J		
B	136431	NUT – HEX FLG CTR LOC M12 X 1.75-10		
C	197135	SCREW – HEX SOC HD SHLDR M8 X 10		
D	184708	WASHER – FLAT M8-200HV-AA1J		
E	152668	NUT – HEX FLG CTR LOC M6 X 1-8		
F	136592	SCREW – HEX SOC CSK HD TFL M8 X 1.25 X 20-8.8-ZINC		
G	152730	BOLT – HEX HD TFL M12 X 1.75 X 35-10.9-AA1J		
H	50155	BOLT – HEX HD TFL M12 X 1.75 X 25-8.8-AA1J		
J	184714	WASHER – FLAT REG M12-300HV		
K	184667	BOLT – RHSN M12 X 1.75 X 30-8.8-ZINC		
L	136291	BOLT – RHSN TFL M12 X 1.75 X 35-8.8-ZINC		
M	136702	WASHER – CON SPRING M12-ZINC		
N	136401	SCREW – CSK HEX SOC M12 X 1.75 X 40-10.9-AA1J		
P	136759	NUT – HEX CTR LOC M12 X 1.75-8-AA1J		
Q	136842	BOLT – HEX HD TFL M10 X 1.5 X 16-8.8-ZINC		
R	30655	WASHER – HARD M10-340HV-AB0C		
S	136209	SCREW – HEX WSHR M10 X 1.5X20-450HV		
T	135959	BOLT – HEX FLG HD M6 X 1 X 16-10.9-AA1J		
U	30630	BOLT – HEX HD TFL M12 X 1.75 X 30-8.8-A3L		
V	136446	NUT – HEX SLTD FINE M24 X 1.5-SPCL-22HA-ZINC		
W	31774	WASHER – FLAT 1-1/8-30HRC-AC0C		
X	136443	NUT – SPRING "U" TYPE M6 X 1		
Y	152730	BOLT – HEX HD TFL M12 X 1.75 X 35-10.9-AA1J [219]		
	184669	BOLT – HEX HD M12 X 1.75 X 40-8.8-AA1J [218]		

218. Triple-reel headers only.
219. Double-reel headers only.

55 Reel – Cam Components, Right Arm

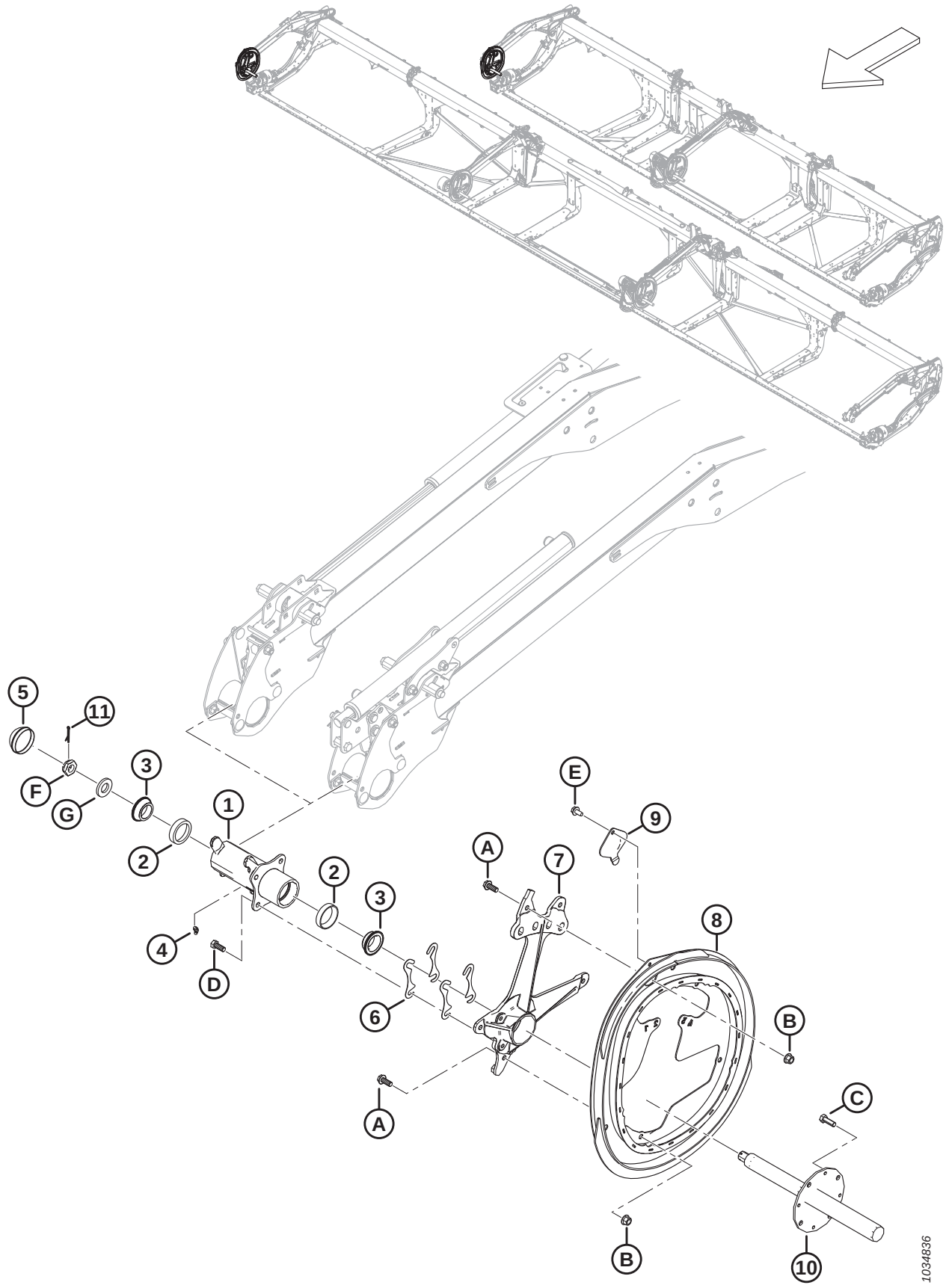

REEL – CAM COMPONENTS, RIGHT ARM

Ref	Part Number	Description	Qty	Serial Number
1	273759	HUB ASSEMBLY – RH CAM [220]	1	
2	164214	BEARING – CUP	2	
3	164213	BEARING – CONE C/W SEAL	2	
4	21301	FITTING – LUBRICATION	1	
5	140250	CAP – DUST	1	
6	164061	SHIM – HUB TO CAM	4	
7	228292	SUPPORT – CAM MACHINING	1	
8	273926	CAM – WELDMENT	1	
9	137476	COVER – CAM BEARING ACCESS	1	
10	228302	SHAFT – MACHINED RH REEL	1	
11	18607	PIN – COTTER 5/32 DIA X 1.5 ZP	1	
A	320180	BOLT – HEX FLG HD M12 X 1.75 X 30-SPCL-8.8-AA1J		
B	136431	NUT – HEX FLG CTR LOC M12 X 1.75-10		
C	152730	BOLT – HEX HD TFL M12 X 1.75 X 35-10.9-AA1J		
D	30630	BOLT – HEX HD TFL M12 X 1.75 X 30-8.8-A3L		
E	136209	SCREW – HEX WSHR M10 X 1.5 X 20-450HV		
F	136446	NUT – HEX SLTD FINE M24 X 1.5-SPCL-22HA-ZINC		
G	31774	WASHER – FLAT 1-1/8-30 HRC-AC0C		

220. The hub assembly includes two bearing cups (MD #164214) and lubrication fitting (MD #21301).

56 Reel – Cam Components, Center Right Arm, Triple Reel (FD240, FD245, and FD250)

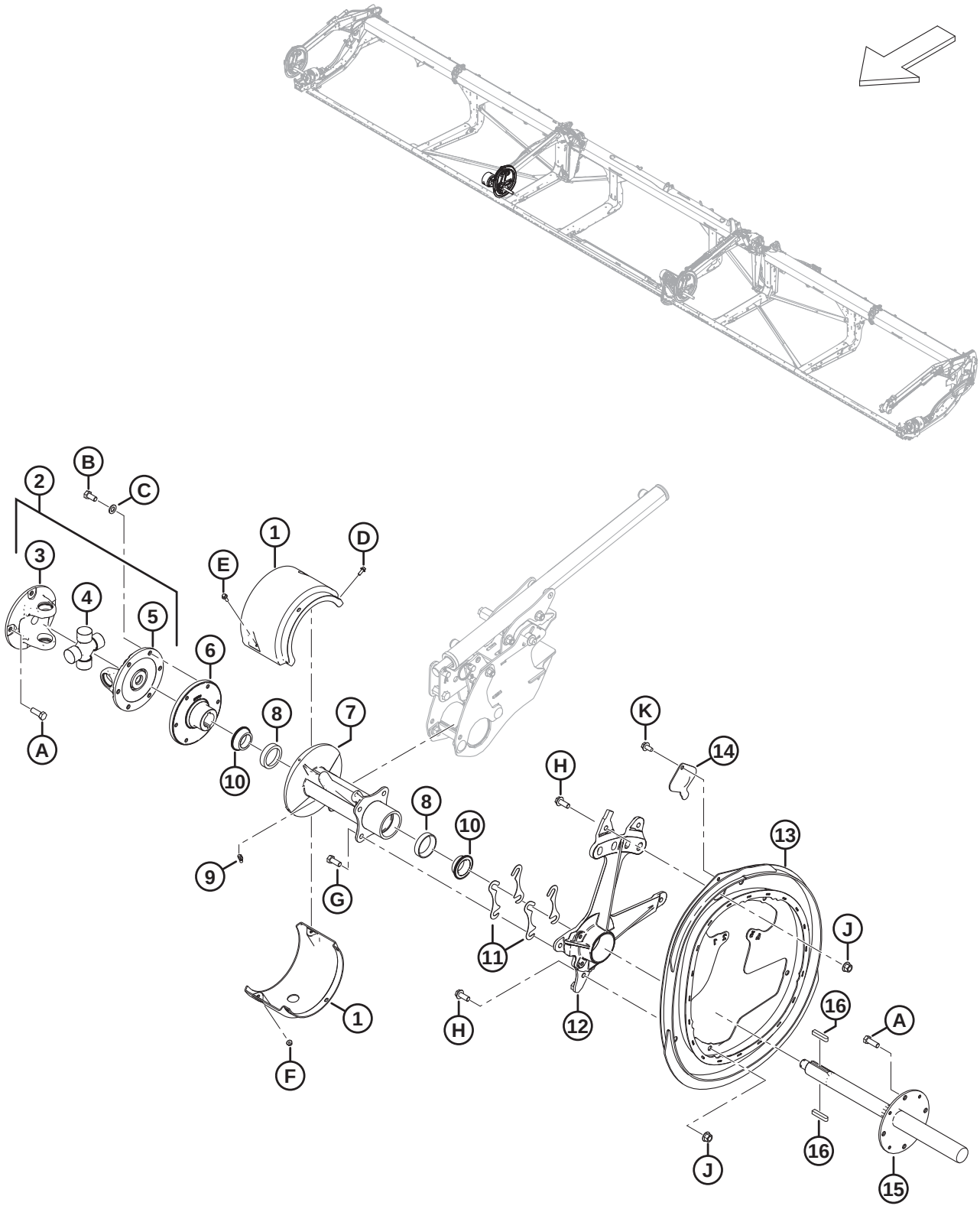

REEL – CAM COMPONENTS, CENTER RIGHT ARM, TRIPLE REEL (FD240, FD245, AND FD250)

Ref	Part Number	Description	Qty	Serial Number
1	311724	COVER SET – TRIPLE REEL [221]	1	
2	228382	REEL DRIVE U-JOINT [222]	1	
3	228384	YOKE – FLANGE 4 BOLT	1	
4	137825	CROSS JOURNAL ASSEMBLY	1	
5	228385	YOKE – FLANGE 6 BOLT	1	
6	273770	HUB – MACHINING U-JOINT MT-TR	1	
7	273760	HUB – TRC W/ BEARING CUPS [223]	1	
8	164214	BEARING – CUP	2	
9	21301	FITTING – LUBRICATION	1	
10	164213	BEARING – CONE C/W SEAL	2	
11	164061	SHIM – HUB TO CAM	4	
12	228292	SUPPORT – CAM MACHINING	1	
13	273926	CAM – WELDMENT	1	
14	137476	COVER – CAM BEARING ACCESS	1	
15	228301	SHAFT – REEL DRIVE MACHINED	1	
16	137721	KEY – REEL DRIVE SHAFT	2	
A	152730	BOLT – HEX HD TFL M12 X 1.75 X 35-10.9-AA1J		
B	50155	BOLT – HEX HD TFL M12 X 1.75 X 25-8.8-AA1J		
C	184714	WASHER – FLAT REG M12-300HV		
D	252639	BOLT – HEX FLG HD M6 X 1 X 16 X SPCL-8.8-AA2L		
E	136324	BOLT – HEX FLG HD TFL M6 X 1 X 20-10.9-AA1J		
F	152668	NUT – HEX FLG CTR LOC M6 X 1-8		
G	30630	BOLT – HEX HD TFL M12 X 1.75 X 30-8.8-A3L		
H	320180	BOLT – HEX FLG HD M12 X 1.75 X 30-SPCL-8.8-AA1J		
J	136431	NUT – HEX FLG CTR LOC M12 X 1.75-10		
K	136209	SCREW – HEX WSHR M10 X 1.5 X 20-450HV		

221. Set includes top and bottom triple-reel covers.
222. U-joint includes cross journal assembly (MD #137825), four bolt flange yoke (MD #228384), and six bolt flange yoke (MD #228385).
223. Hub includes two bearing cups (MD #164214) and lubrication fitting (MD #21301).

57 Reel – Tine Tube

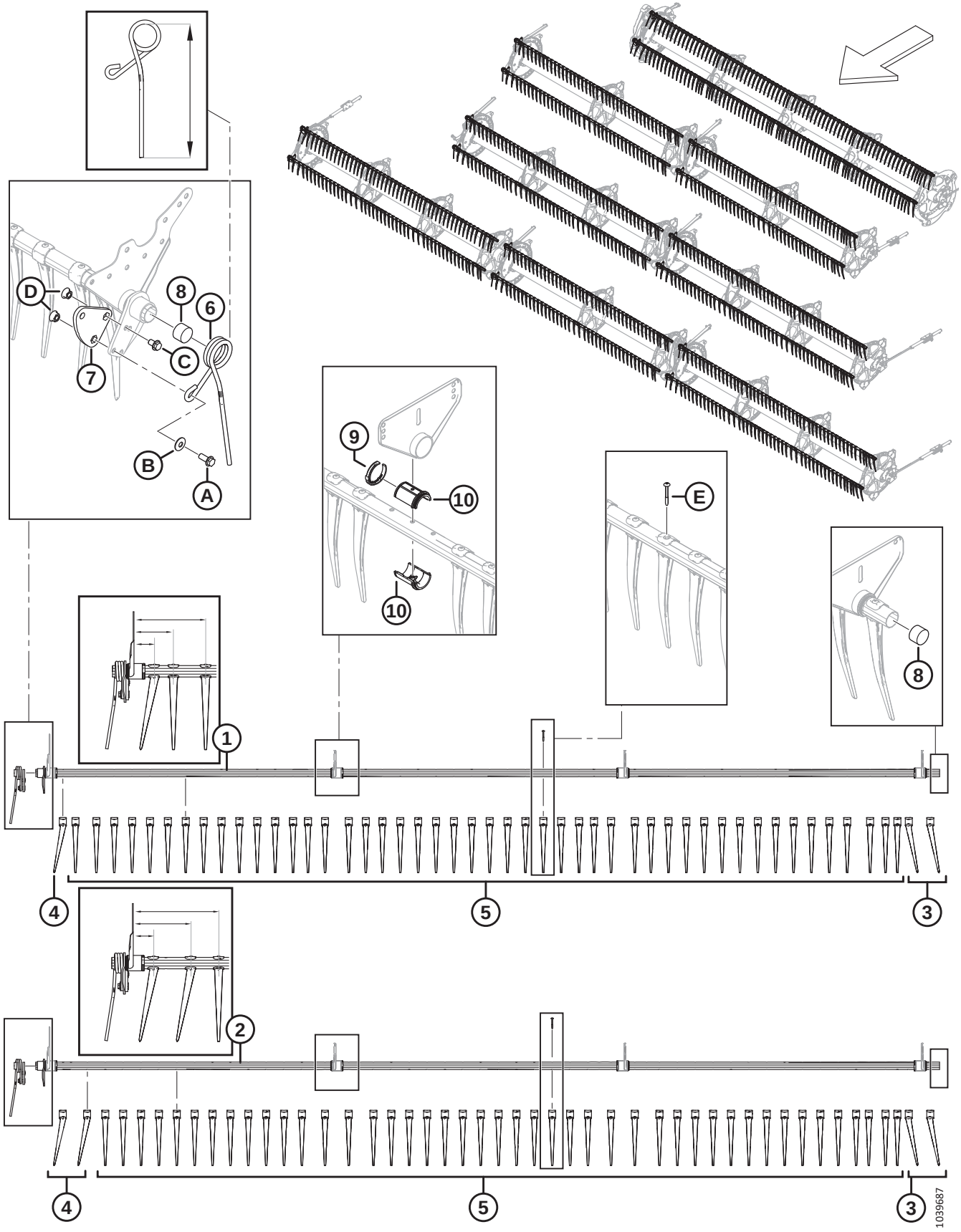

NOTE:

Finger configuration varies for narrow or wide and left, right, and center tine tubes.

Ref	Part Number	Description	Qty	Serial Number
1	360201	TINE TUBE WELDT – 25 FT SR NARROW [224]	3	
	311368	TINE TUBE WELDT – 30 FT DR NARROW [224]	6	
	311207	TINE TUBE WELDT – 35 FT DR NARROW [224]	6	
	311190	TINE TUBE WELDT – 40 FT DR NARROW [224]	6	
	311303	TINE TUBE WELDT – 41 FT DR NARROW [224]	6	
	311408	TINE TUBE WELDT – 40 FT TR AND 45 FT TR NARROW [224]	6	
	311745	TINE TUBE WELDT – 40 FT TR NARROW (CENTER) [224]	3	
	311675	TINE TUBE WELDT – 50 FT TR NARROW [224]	6	
	311408	TINE TUBE WELDT – 45 FT TR AND 50 FT TR NARROW (CENTER) [224]	3	
2	360199	TINE TUBE WELDT – 25 FT SR WIDE [224]	2	
	311365	TINE TUBE WELDT – 30 FT DR WIDE [224]	4	
	311210	TINE TUBE WELDT – 35 FT DR WIDE [224]	4	
	311193	TINE TUBE WELDT – 40 FT DR WIDE [224]	4	
	311306	TINE TUBE WELDT – 41 FT DR WIDE [224]	4	
	311405	TINE TUBE WELDT – 40 FT TR AND 45 FT TR WIDE [224]	4	
	311746	TINE TUBE WELDT – 40 FT TR WIDE (CENTER) [224]	2	
	311676	TINE TUBE WELDT – 50 FT TR WIDE [224]	4	
	311405	TINE TUBE WELDT – 45 FT TR AND 50 FT TR WIDE (CENTER) [224]	2	
3	360540	FINGER – PLASTIC, LH ANGLED (10 PACK)	A/R	
4	311523	FINGER – PLASTIC, RH ANGLED (10 PACK)	A/R	
5	174849	FINGER – PLASTIC, STRAIGHT (10 PACK) [225]		
6	311327	FINGER – CAM END BENT, LH REEL (315 MM LG) [226]	1	
	311325	FINGER – CAM END OUTBOARD, RH REEL (305 MM LG) [226]	1	
7	228319	ARM – CRANK MACHINING (SR, DR) [227]	1	
	273877	ARM – CRANK MACHINING (TR) [228]	1	
8	137980	PLUG – TINE TUBE	2	
9	220941	CLAMP – TINE TUBE BUSHING, CENTER RIB (5 PACK)	A/R	
10	220939	TINE TUBE BUSHING (25 PACK)	A/R	

224. Narrow or wide tine tubes can be distinguished from the first three fingers of the RH side. Narrow tine tubes have one RH angled finger (MD #311523) followed by two straight fingers (MD #174849) and measure 76 mm, 146 mm, and 265 mm as illustrated. Wide tine tubes have two RH angled fingers (MD #311523) followed by one straight finger (MD #174849) and measure 76 mm, 214 mm, and 315 mm as illustrated.
225. Quantities per tine tube (LH/RH/Center): NARROW – FD230 = 40/41/0, FD235 = 47/48/0, FD240 DR = 55/56/0, FD240 TR = 40/41/26, FD241 = 56/57/0, FD245 = 40/41/41, and FD250 = 47/48/41. WIDE – FD230 = 37/38/0, FD235 = 44/45/0, FD240 DR = 51/52/0, FD240 TR = 37/38/23, FD241 = 52/54/0, FD245 = 37/38/38, and FD250 = 44/45/38. Quantities per tine tube (single reel): NARROW – FD225 = 70. WIDE – FD225 = 71.
226. There are two lengths of finger that can be ordered. The finger at the RH side of the reel is shorter than fingers at the center of the header. The correct finger must be installed in the correct position to prevent damage. Determine the proper length (315 or 305 mm) of a finger by measuring the finger from the inside top loop to the finger tip as shown in illustration.
227. Steel with three holes; for single- and double-reel headers only.
228. Aluminum with four holes; for triple-reel headers only.

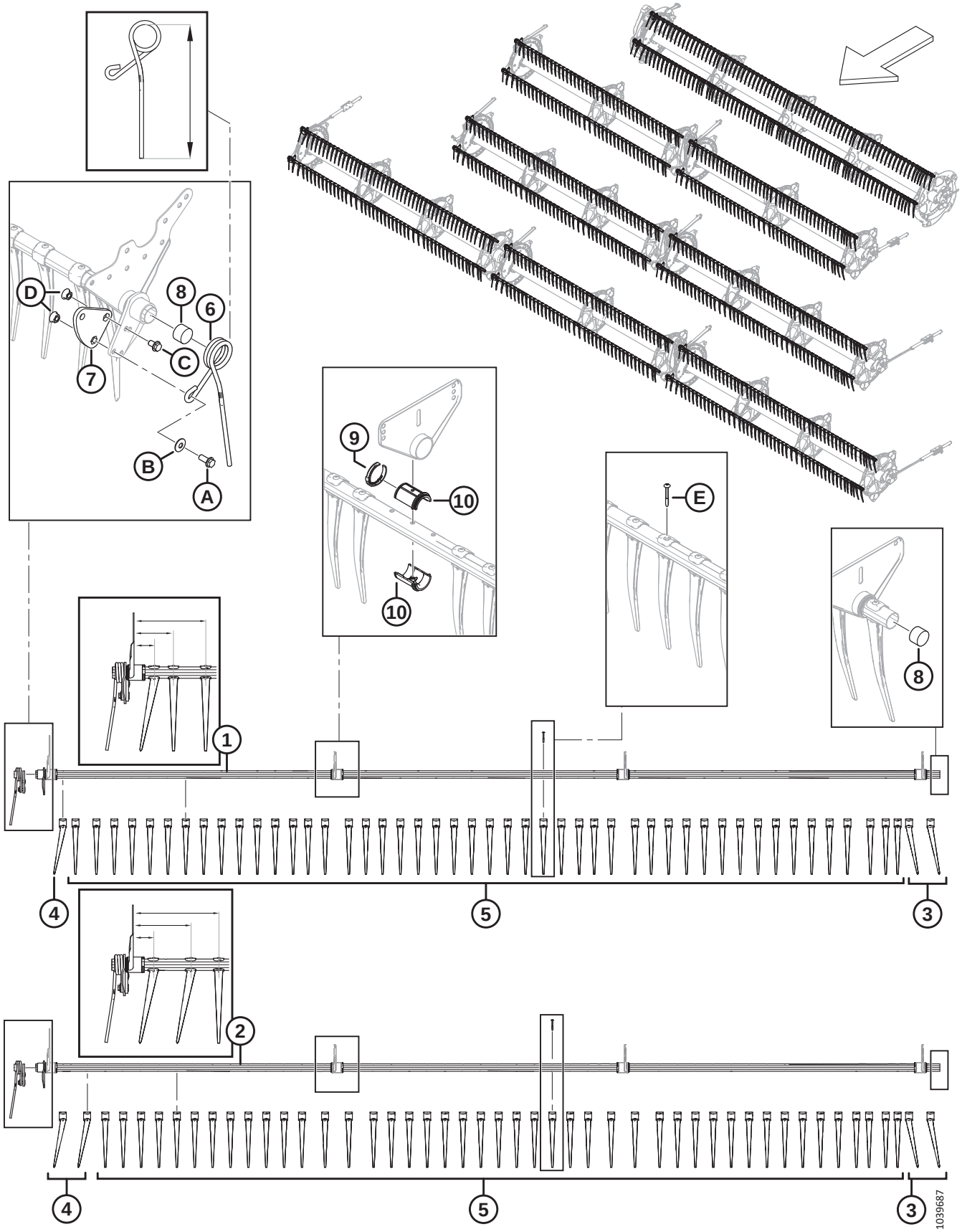
D
8
6
C
7
B
A
9
10
10
E
8
1
4
5
3
2
4
5
3
1039687

Ref	Part Number	Description	Qty	Serial Number
A	320192	BOLT – HEX FLG HD M12 X 1.75 X 30-SPCL-8.8-AA1J		
B	184597	WASHER – CON SPRING M12-AA1J [229]		
C	320187	BOLT – HEX FLG HD M12 X 1.75 X 20-SPCL-8.8-AA1J		
D	184697	NUT – HEX SER FLG M12 X 1.75-8-AA1J		
E	252687	SCREW – 48° PLASTITE TWIN HELIX		

229. Be sure to note the orientation of washer (MD #184597). The concave (inward facing) surface of the washer should be installed facing away from the tine tube crank arm assembly.

58 Reel Discs – Cam End and Linkage (FD225, FD230, FD235, FD240, FD241, FD245, and FD250)

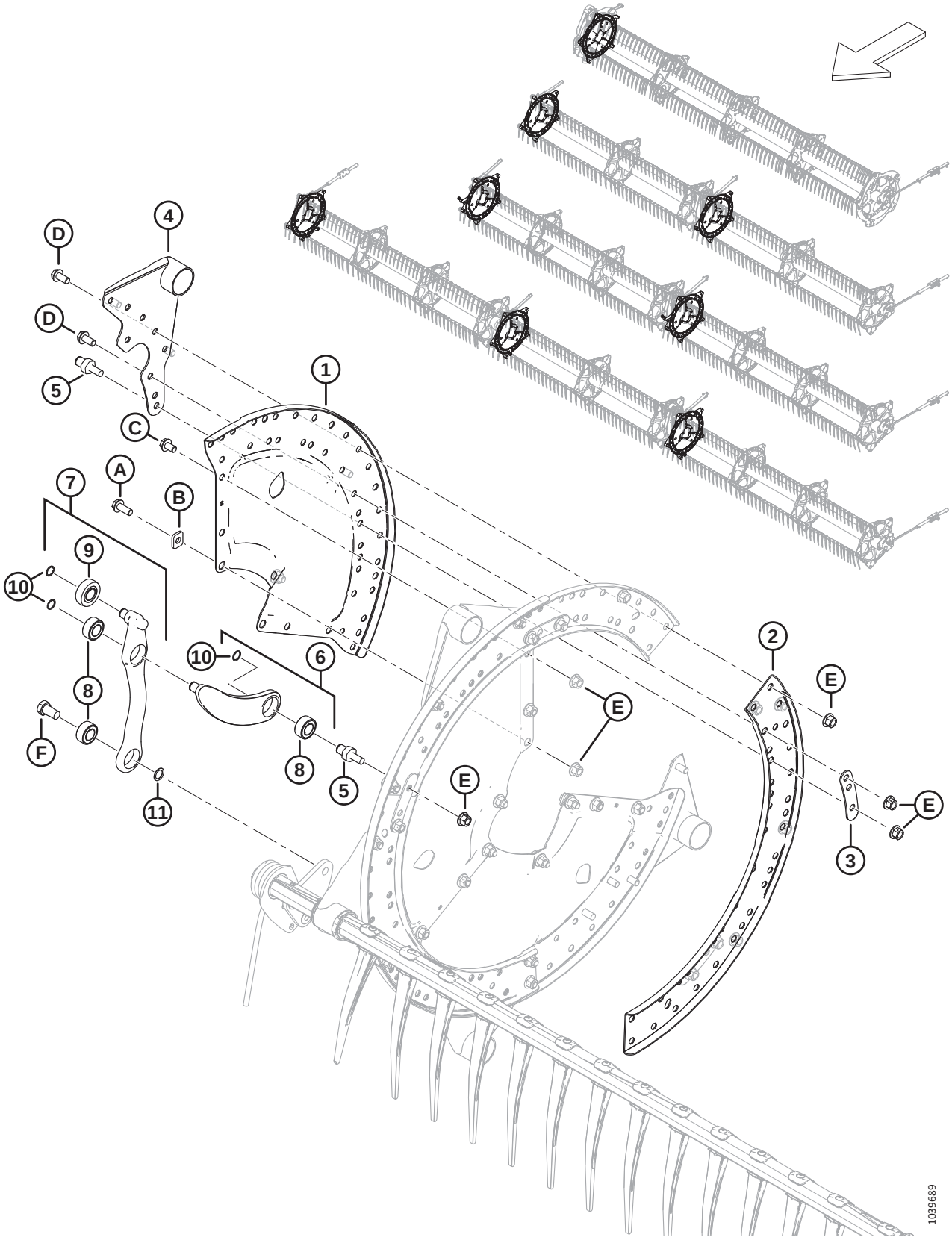

Ref	Part Number	Description	Qty	Serial Number
1	273373	SECTOR – CAM END	3	
2	273376	CHANNEL – CAM DISC	3	
3	311672	STRAP	5	
4	335924	ARM WELDT – CAM END	5	
5	340146	STUD (FOR LINKAGE)	5	
6	311615	ARM – ASSEMBLY [230]	5	
7	311617	ARM – TINE CONTROL ASSY [231]	5	
8	273347	BEARING	A/R	
9	273524	BEARING – CAM FOLLOWER	A/R	
10	273536	RING – RETAINING	10	
11	137529	SHIM – CRANK BEARING		
A	320180	BOLT – HEX FLG HD M12 X 1.75 X 30-SPCL-8.8-AA1J		
B	273666	WASHER		
C	320179	BOLT – HEX FLG HD TFL M12 X 1.75 X 20-SPCL-8.8-AA1J		
D	320175	BOLT – HEX FLG HD TFL M12 X 1.75 X 25-SPCL-8.8-AA1J		
E	136431	NUT – HEX FLG CTR LOC M12 X 1.75-10		
F	228316	BOLT – HEX HD M16 X 1.5 X 15-SPCL-8.8-AA1J		

230. The arm assembly includes arm (NSS), bearing (MD #273347), and retaining ring (MD #273536).

231. The tine control assembly includes arm (NSS), cam follower bearing (MD #273524), two bearings (MD #273347), and retaining ring (MD #273536).

59 Reel Discs – Mid Span, Cam Side (FD225, FD235, FD240, FD241, FD245, and FD250)

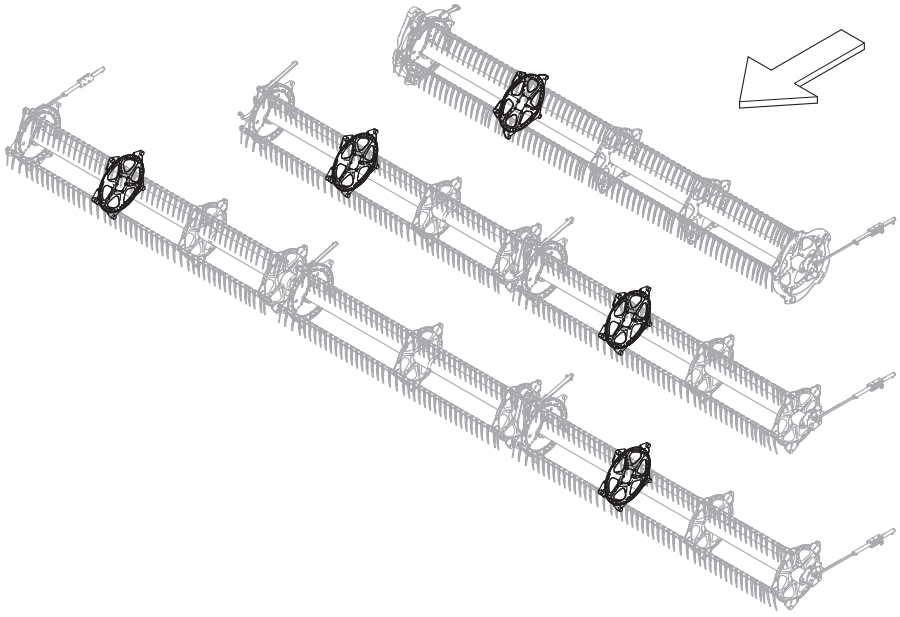

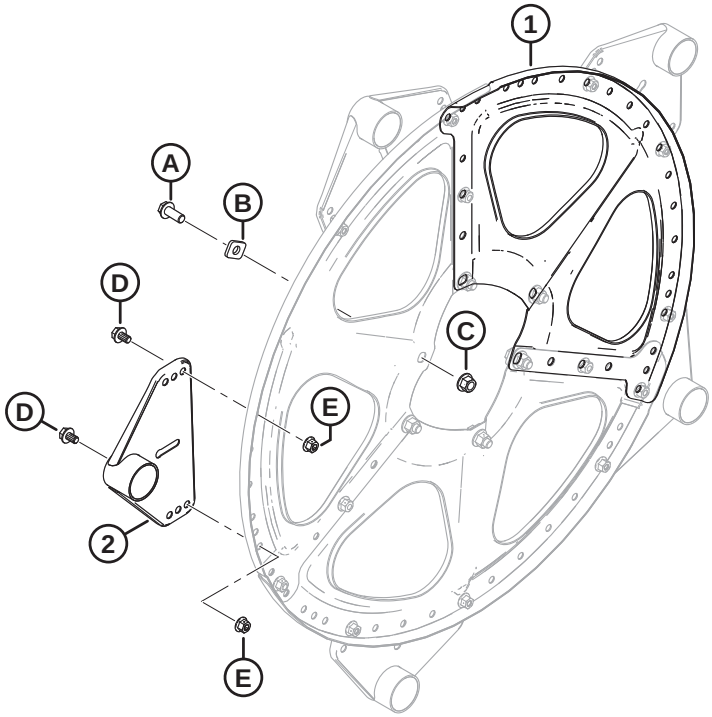

1039691

REEL DISCS – MID SPAN, CAM SIDE (FD225, FD235, FD240, FD241, FD245, AND FD250)

Ref	Part Number	Description	Qty	Serial Number
1	273375	SECTOR – MID SPAN AND TAIL END	3	
2	273523	ARM WELDT – MID SPAN	5	
A	320180	BOLT – HEX FLG HD M12 X 1.75 X 30-SPCL-8.8-AA1J		
B	273666	WASHER		
C	136431	NUT – HEX FLG CTR LOC M12 X 1.75-10		
D	136151	BOLT – HEX FLG HD TFL M10 X 1.5 X 16-8.8-AA1J		
E	135799	NUT – HEX FLG CTR LOC M10 X 1.5-10		

60 Reel Discs – Mid Span, Tail Side (FD225, FD230, FD235, FD240, FD241, FD245, and FD250)

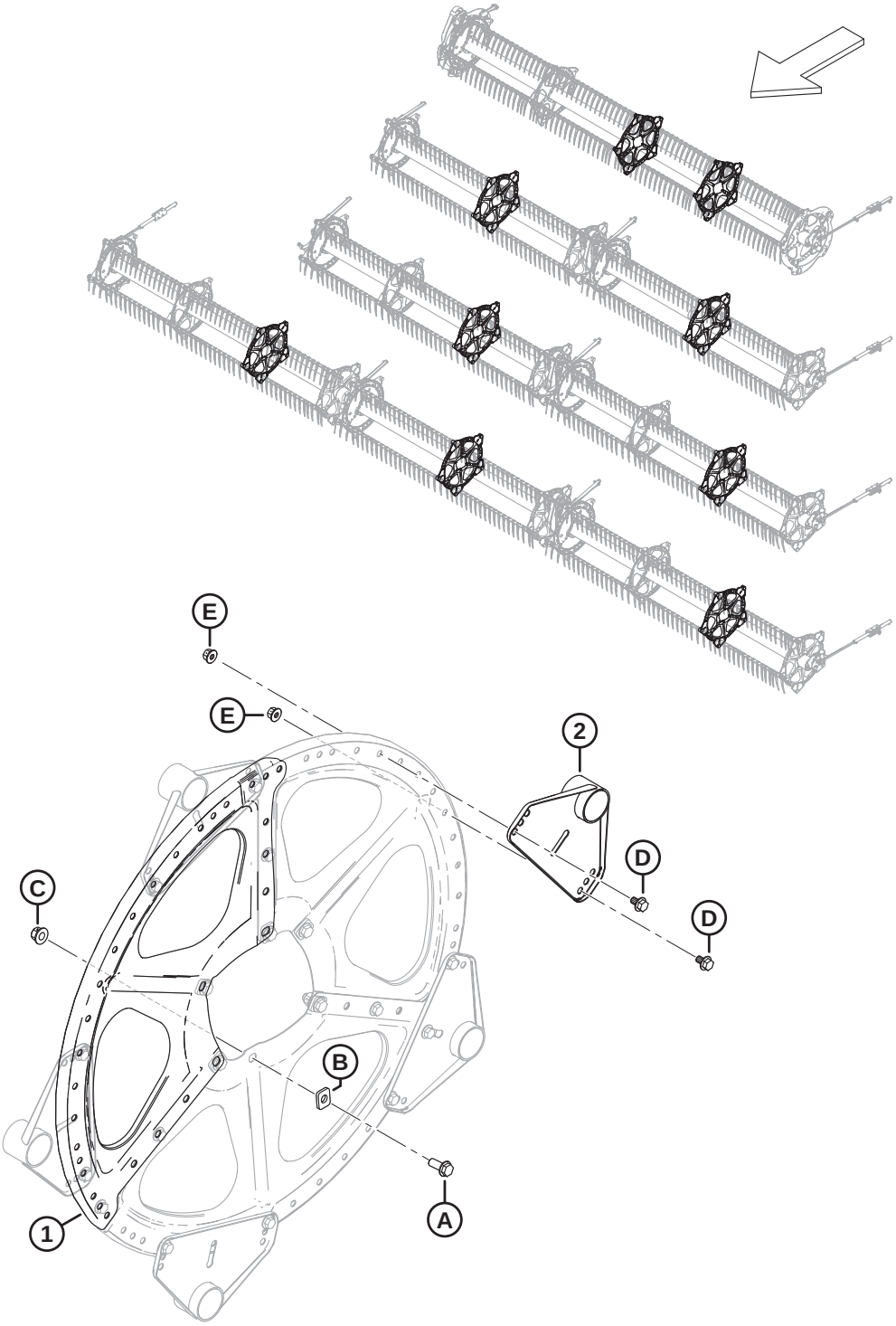

1039693

REEL DISCS – MID SPAN, TAIL SIDE (FD225, FD230, FD235, FD240, FD241, FD245, AND FD250)

Ref	Part Number	Description	Qty	Serial Number
1	273375	SECTOR – MID SPAN AND TAIL END	3	
2	273523	ARM WELDT – MID SPAN	5	
A	320180	BOLT – HEX FLG HD M12 X 1.75 X 30-SPCL-8.8-AA1J		
B	273666	WASHER		
C	136431	NUT – HEX FLG CTR LOC M12 X 1.75-10		
D	136151	BOLT – HEX FLG HD TFL M10 X 1.5 X 16-8.8-AA1J		
E	135799	NUT – HEX FLG CTR LOC M10 X 1.5-10		

61 Reel Discs – Tail End (FD225, FD230, FD235, FD240, FD241, FD245, and FD250)

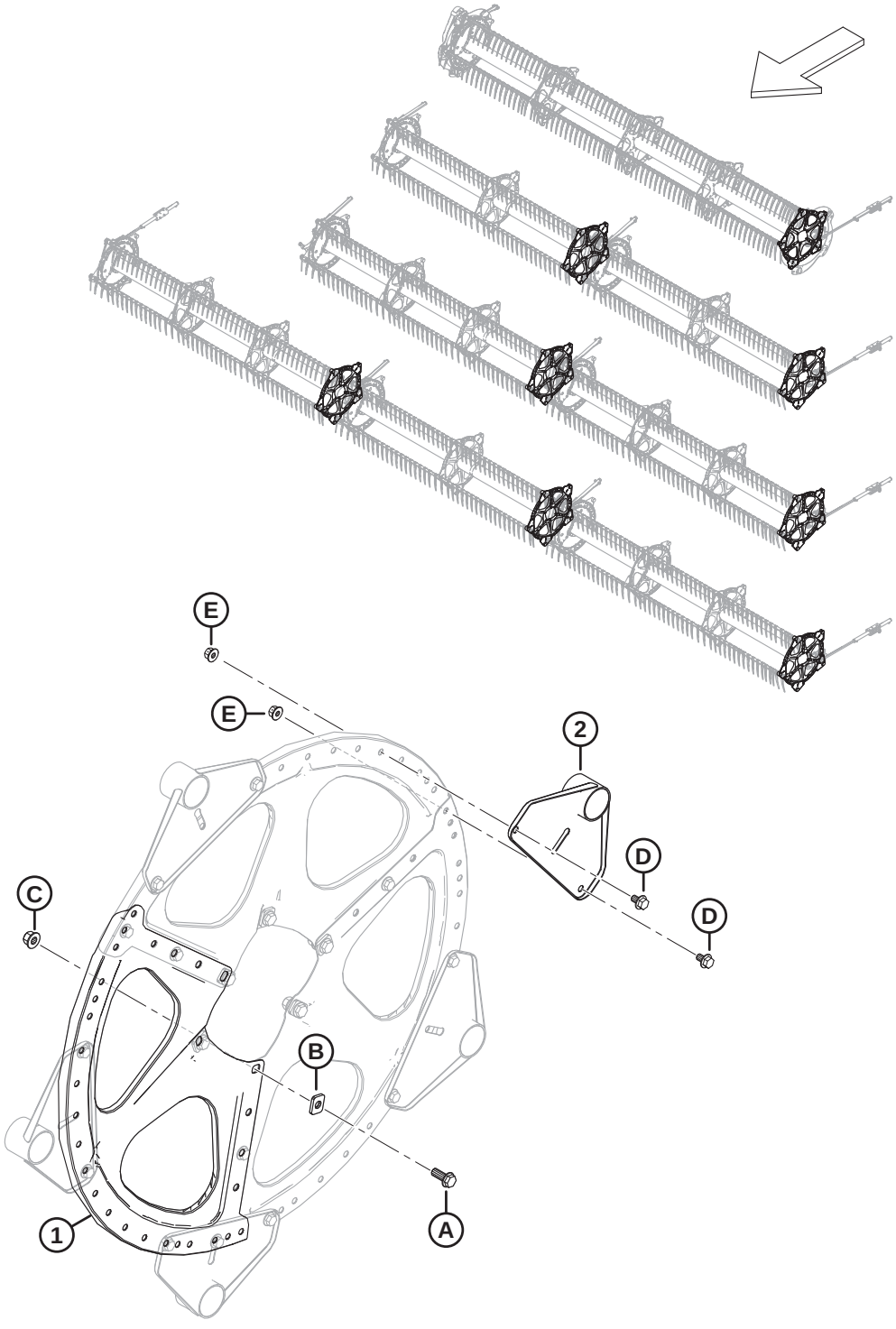

REEL DISCS – TAIL END (FD225, FD230, FD235, FD240, FD241, FD245, AND FD250)

Ref	Part Number	Description	Qty	Serial Number
1	273375	SECTOR – MID SPAN AND TAIL END	3	
2	311347	ARM WELDT – TAIL END	5	
A	320180	BOLT – HEX FLG HD M12 X 1.75 X 30-SPCL-8.8-AA1J		
B	273666	WASHER		
C	136431	NUT – HEX FLG CTR LOC M12 X 1.75-10		
D	136151	BOLT – HEX FLG HD TFL M10 X 1.5 X 16-8.8-AA1J		
E	135799	NUT – HEX FLG CTR LOC M10 X 1.5-10		

62 Reel – Center Tubes, Single Reel

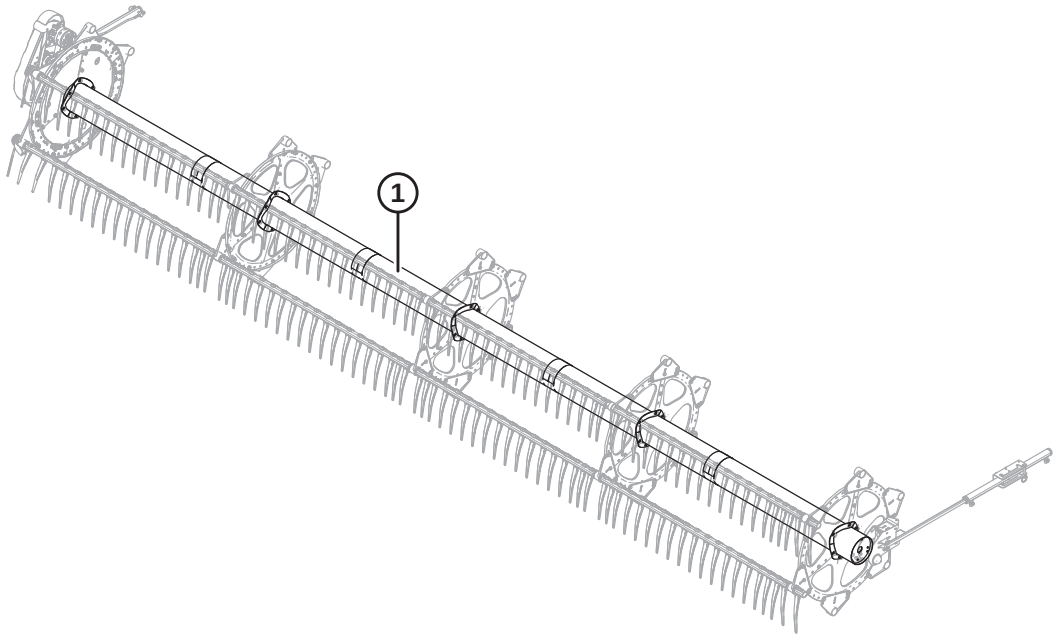

1039380

Ref	Part Number	Description	Qty	Serial Number
1	360376	CENTER TUBE – W/ DECALS, 25 FT (AMBER, RED-ORANGE DECALS) [232]	1	

232. FD225 single reel.

63 Reel – Center Tubes, Double Reel

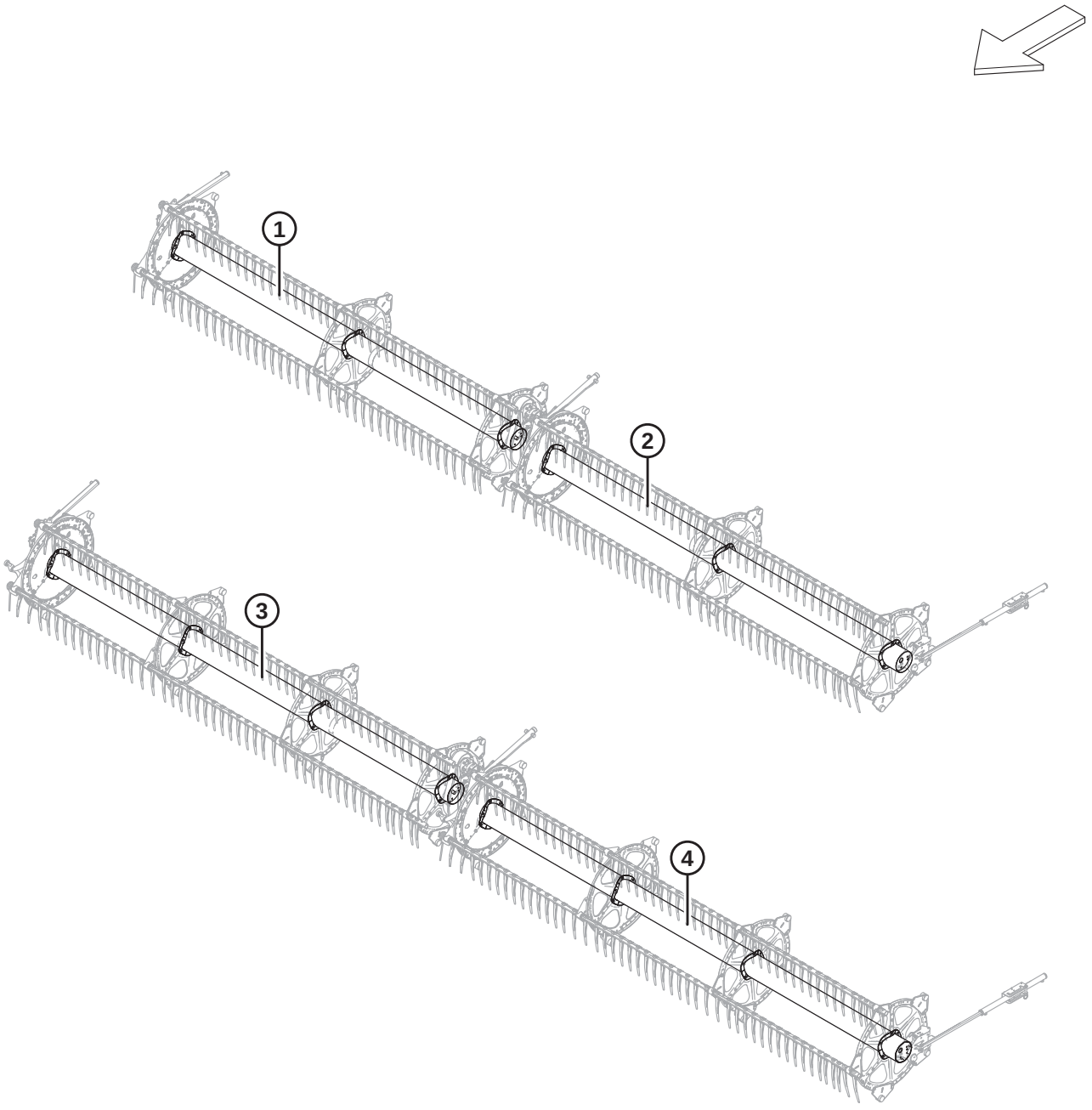

1038508

Ref	Part Number	Description	Qty	Serial Number
1	311644	CENTER TUBE – W/ DECALS, 30 FT (AMBER, RED-ORANGE DECALS) [233]	1	
2	311643	CENTER TUBE – W/ DECALS, 30 FT (AMBER, RED-ORANGE DECALS) [234]	1	
3	311646	CENTER TUBE – W/ DECALS, 35 FT (AMBER, RED-ORANGE DECALS) [235]	1	
	311195	CENTER TUBE – W/ DECALS, 40 FT (AMBER DECALS) [236]	1	
	311648	CENTER TUBE – W/ DECALS, 41 FT (AMBER, RED-ORANGE DECALS) [237]	1	
4	311645	CENTER TUBE – W/ DECALS, 35 FT (AMBER, RED-ORANGE DECALS) [238]	1	
	311658	CENTER TUBE – W/ DECALS, 40 FT (AMBER, RED-ORANGE DECALS) [239]	1	
	311647	CENTER TUBE – W/ DECALS, 41 FT (AMBER, RED-ORANGE DECALS) [240]	1	

233. FD230 RH double reel.
234. FD230 LH double reel.
235. FD235 RH double reel.
236. FD240 RH double reel.
237. FD241 RH double reel.
238. FD235 LH double reel.
239. FD240 LH double reel.
240. FD241 LH double reel.

64 Reel – Center Tubes, Triple Reel

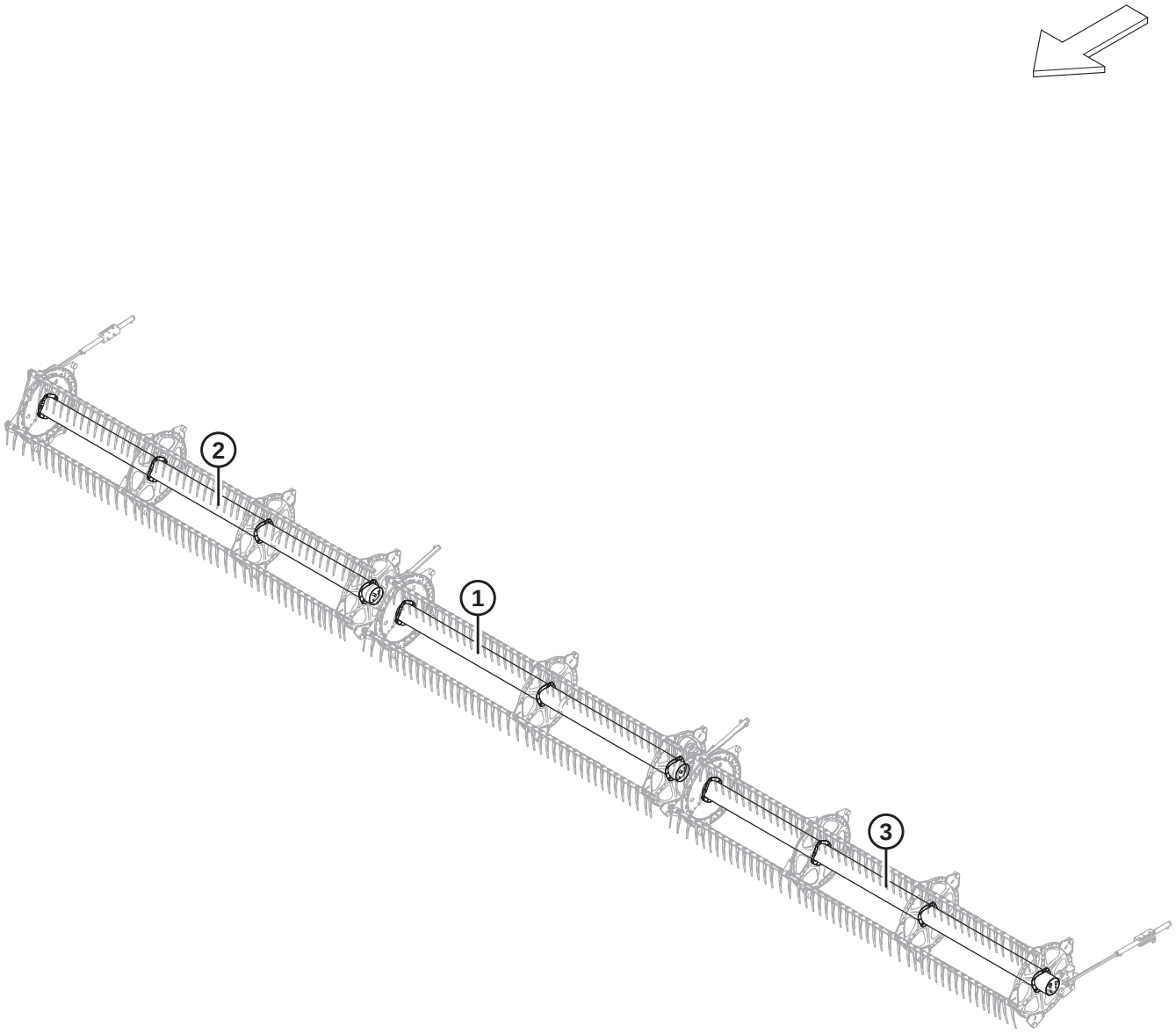

1038505

Ref	Part Number	Description	Qty	Serial Number
1	311644	CENTER TUBE – W/ DECALS, 45 AND 50 FT (AMBER, RED-ORANGE DECALS) [241]	1	
	311038	CENTER TUBE – W/ DECALS, 40 FT (AMBER DECALS) [242]	1	
2	311646	CENTER TUBE – W/ DECALS, 50 FT (AMBER, RED-ORANGE DECALS) [243]	1	
	311644	CENTER TUBE – W/ DECALS, 40 AND 45 FT (AMBER, RED-ORANGE DECALS) [244]	1	
3	311645	CENTER TUBE – W/ DECALS, 50 FT (AMBER, RED-ORANGE DECALS) [245]	1	
	311643	CENTER TUBE – W/ DECALS, 40 AND 45 FT (AMBER, RED-ORANGE DECALS) [246]	1	

241. FD245 and FD250 center triple reel.
242. FD240 center triple reel.
243. FD250 RH triple reel.
244. FD240 RH triple reel and FD245 RH triple reel.
245. FD250 LH triple reel.
246. FD240 LH triple reel and FD245 LH triple reel.

65 Reel – Endshields, Cam End, Inboard

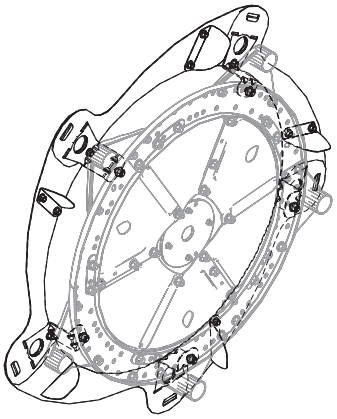

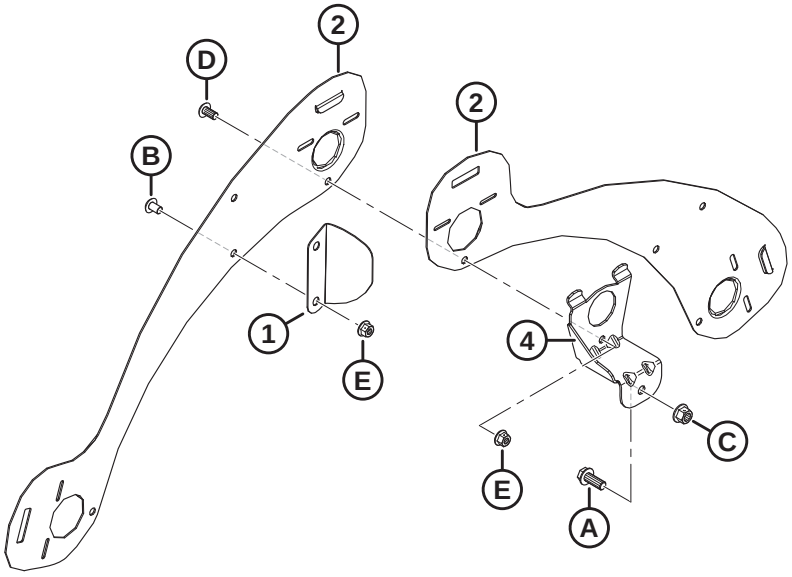

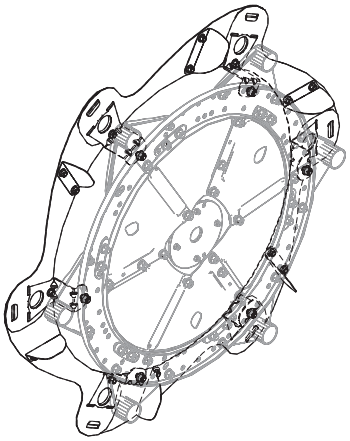

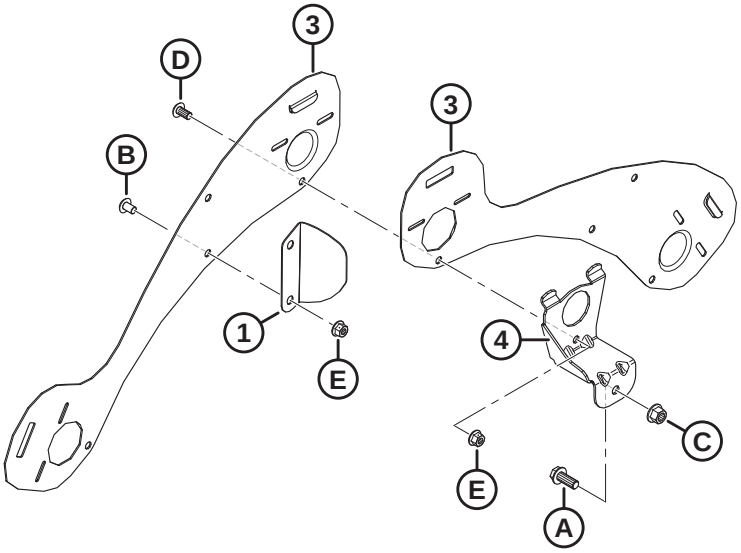

1036485

NOTE:

Top illustration shows 5 bat; bottom illustration shows 6 bat.

Ref	Part Number	Description	Qty	Serial Number
1	311906	DEFLECTOR – CAM INBOARD [247]		
2	273823	SHIELD – 5 BAT LH REEL CAM END	5	
3	273813	SHIELD – 6 BAT LH REEL CAM END	6	
4	311964	SUPPORT – WELDT CAM END [247]		
A	320180	BOLT – HEX FLG HD M12 X 1.75 X 30-SPCL-8.8-ZINC		
B	136640	SCREW – TORX TRUSS HD M10 X 1.5 X 16 X SPCL-8.8-AA1J		
C	136431	NUT – HEX FLG CTR LOC M12 X 1.75-10		
D	136395	SCREW – TORX TRUSS HD M10 X 1.5 X 20 X SPCL-8.8-A3L		
E	135799	NUT – HEX FLG CTR LOC M10 X 1.5-10		

247. Quantities: 5 bat = 5, 6 bat = 6.

66 Reel – Endshields, Cam End, Outboard

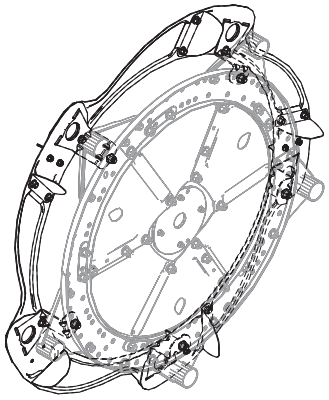

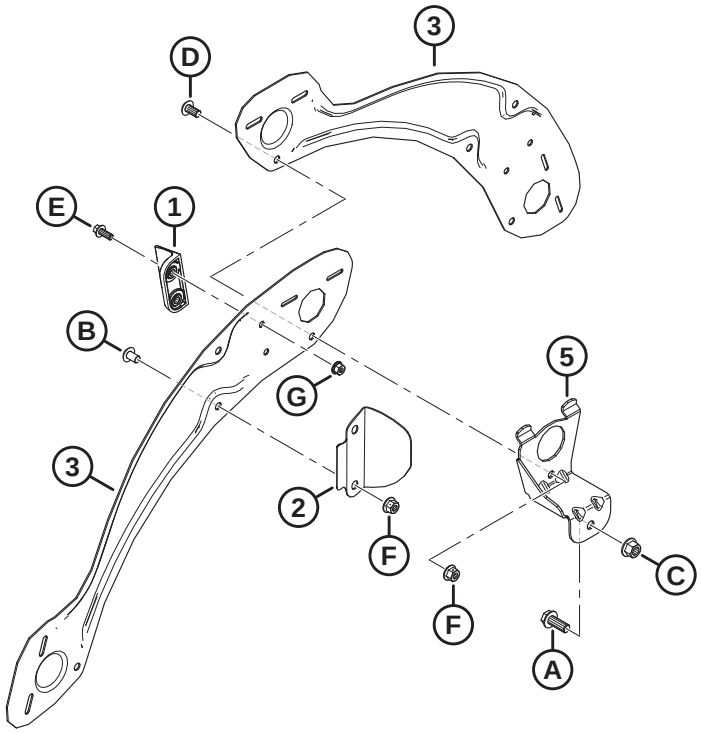

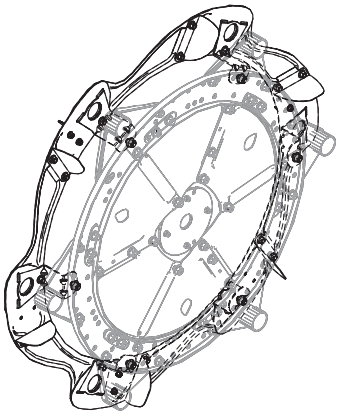

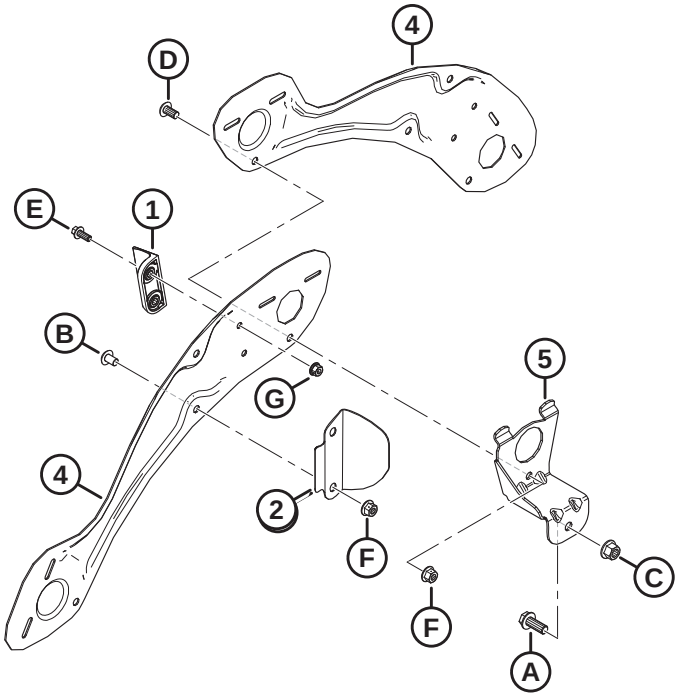

1036486

NOTE:

Top illustration shows 5 bat; bottom illustration shows 6 bat.

Ref	Part Number	Description	Qty	Serial Number
1	313035	PADDLE – REEL END, HYTREL	3	
2	311729	DEFLECTOR – CAM OUTBOARD [248]		
3	311694	SHIELD – OUTBOARD RH 5 BAT	5	
4	311752	SHIELD – OUTBOARD RH 6 BAT	6	
5	311964	SUPPORT – WELDT CAM END [248]		
A	320180	BOLT – HEX FLG HD M12 X 1.75 X 30-SPCL-8.8-ZINC		
B	136640	SCREW – TORX TRUSS HD M10 X 1.5 X 16 X SPCL-8.8-AA1J		
C	136431	NUT – HEX FLG CTR LOC M12 X 1.75-10		
D	136395	SCREW – TORX TRUSS HD M10 X 1.5 X 20 X SPCL-8.8-A3L		
E	136300	BOLT – HEX FLG HD TFL M8 X 1.25 X 20-8.8-AA3L		
F	135799	NUT – HEX FLG CTR LOC M10 X 1.5-10		
G	135337	NUT – HEX FLG CTR LK M8 X 1.25-8-AA1J		

248. Quantities: 5 bat = 5, 6 bat = 6.

67 Reel – Endshields, Tail End, Inboard

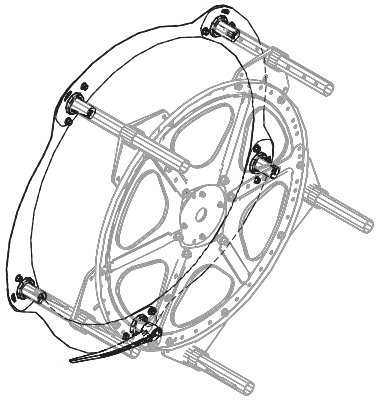

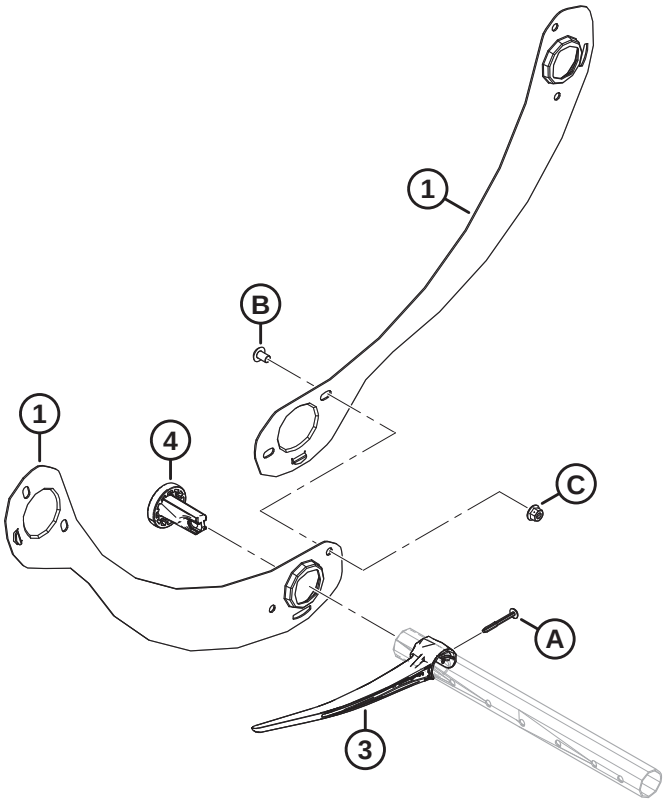

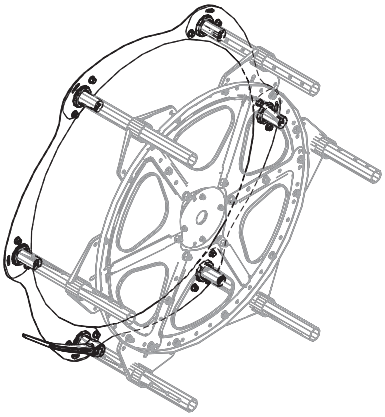

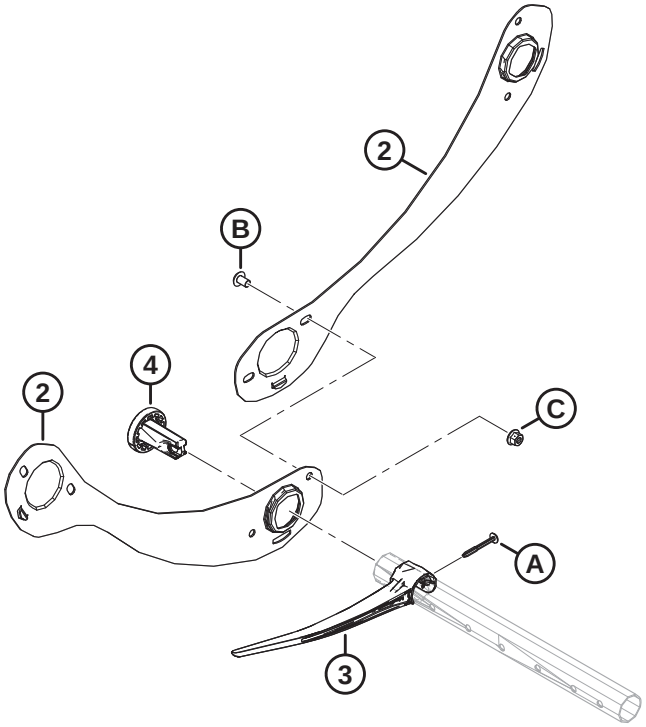

1036769

NOTE:

Top illustration shows 5 bat; bottom illustration shows 6 bat.

Ref	Part Number	Description	Qty	Serial Number
1	311795	SHIELD – 5 BAT RH REEL, TAIL END	5	
2	311822	SHIELD – 6 BAT RH REEL TAIL END	6	
3	311524	FINGER – PLASTIC, LH ANGLED (10 PACK) [249]		
4	273968	BUSHING – ENDSHIELD	5	
A	252687	SCREW – 48° PLASTITE TWIN HELIX		
B	136640	SCREW – TORX TRUSS HD M10 X1.5 X 16 X SPCL-8.8-AA1J		
C	135799	NUT – HEX FLG CTR LOC M10 X 1.5-10		

249. Quantities: 5 bat = 5, 6 bat = 6.

68 Reel – Endshields, Tail End, Outboard

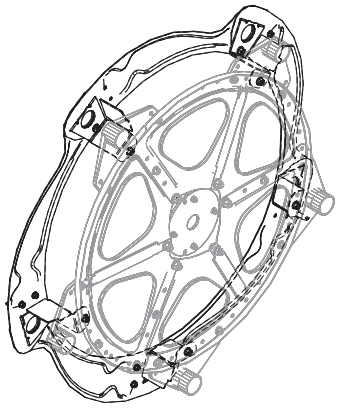

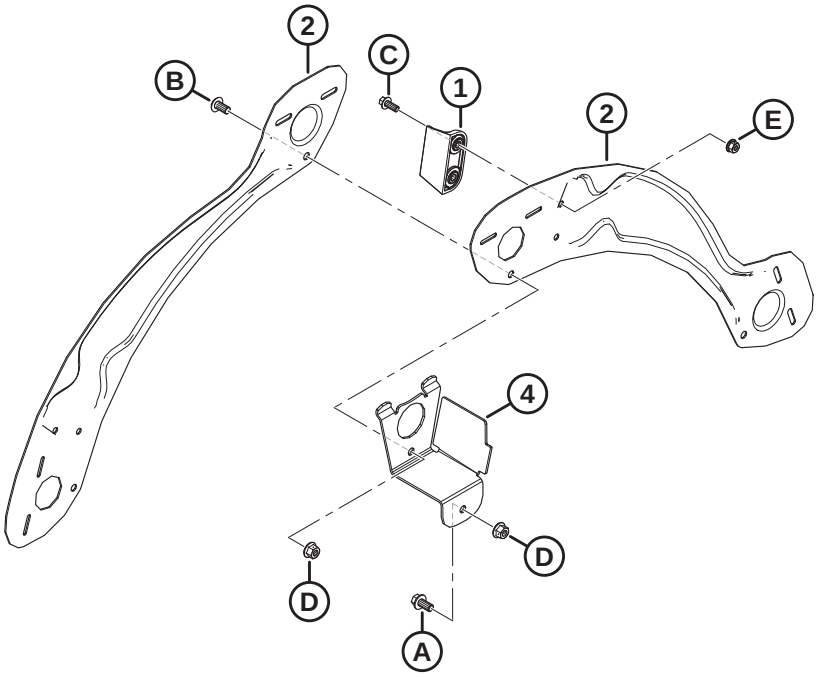

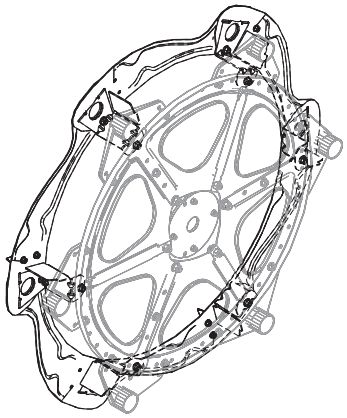

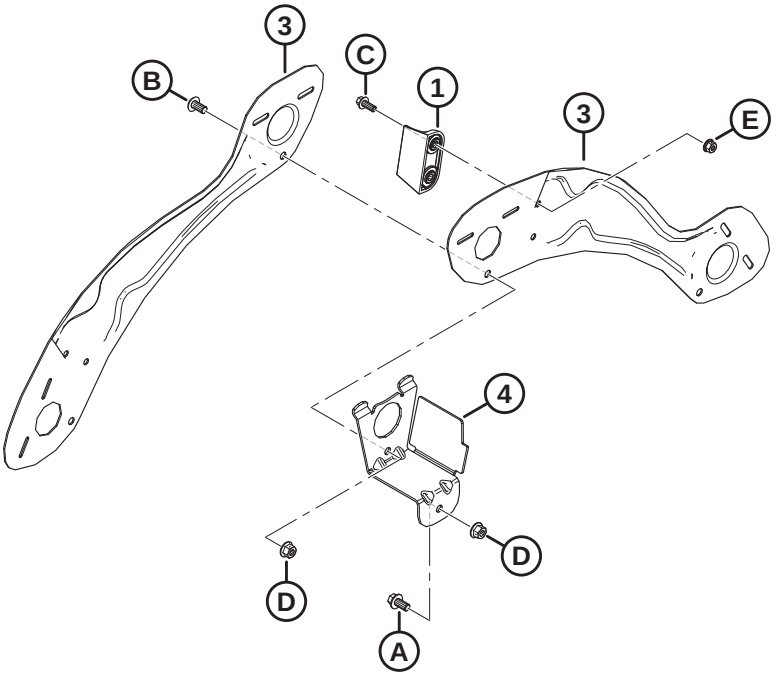

1036771

NOTE:

Top illustration shows 5 bat; bottom illustration shows 6 bat.

Ref	Part Number	Description	Qty	Serial Number
1	313035	PADDLE – REEL END, HYTREL	3	
2	311695	SHIELD – OUTBOARD LH 5 BAT	5	
3	311753	SHIELD – OUTBOARD LH 6 BAT	6	
4	311965	SUPPORT – WELDT TAIL END [250]		
A	152655	BOLT – HEX FLG HD M10 X 1.5 X 20-8.8-AA1J		
B	136395	SCREW – TORX TRUSS HD M10 X 1.5 X 20 X SPCL-8.8-A3L		
C	136300	BOLT – HEX FLG HD TFL M8 X 1.25 X 20-8.8-AA3L		
D	135799	NUT – HEX FLG CTR LOC M10 X 1.5-10		
E	135337	NUT – HEX FLG CTR LK M8 X 1.25-8-AA1J		

250. Quantities: 5 bat = 5, 6 bat = 6.

69 Skid Shoes – End and Center

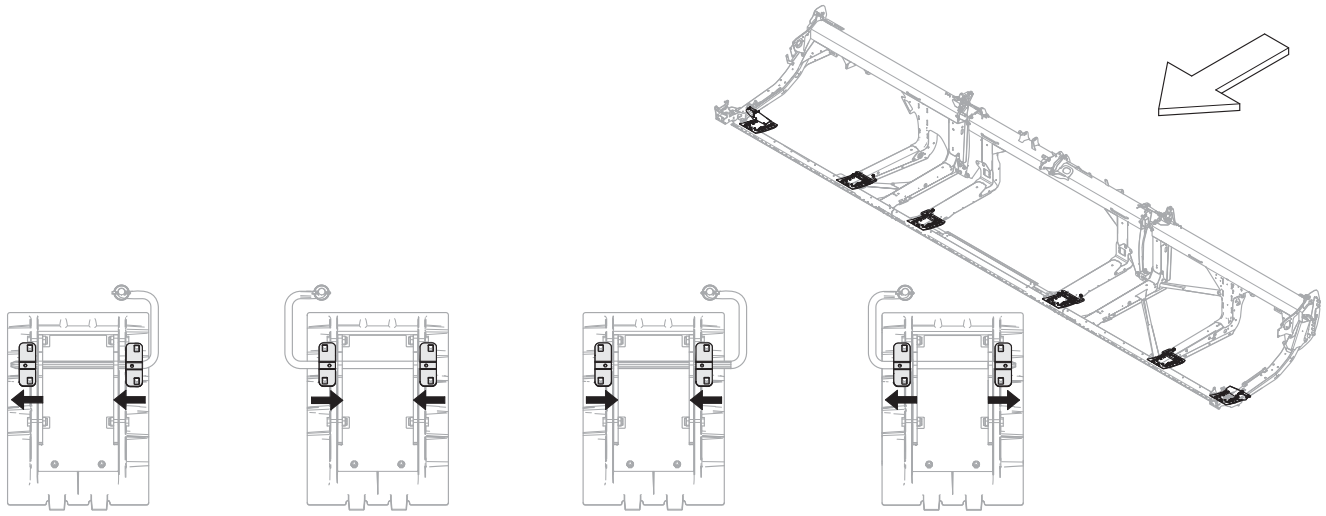

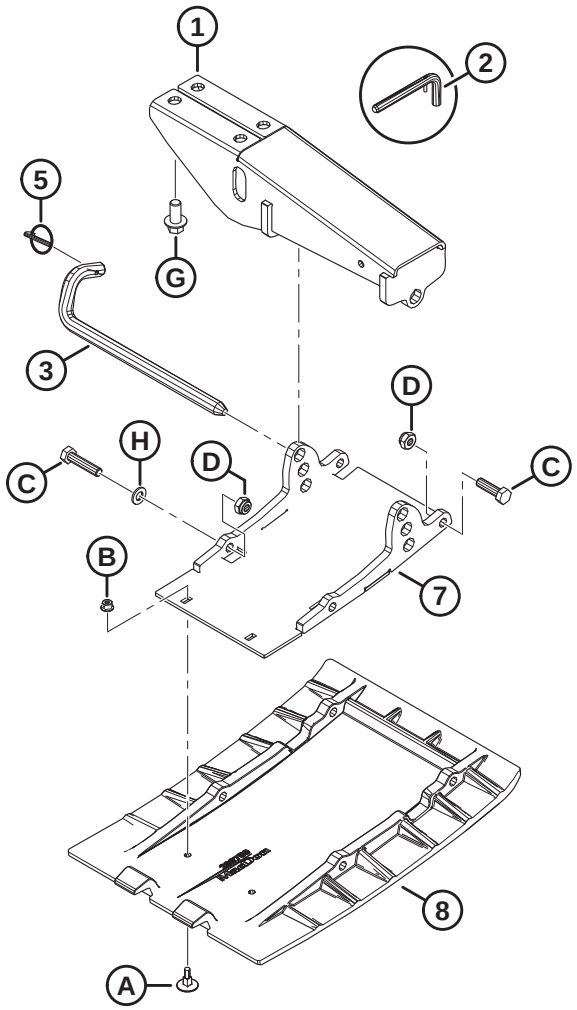

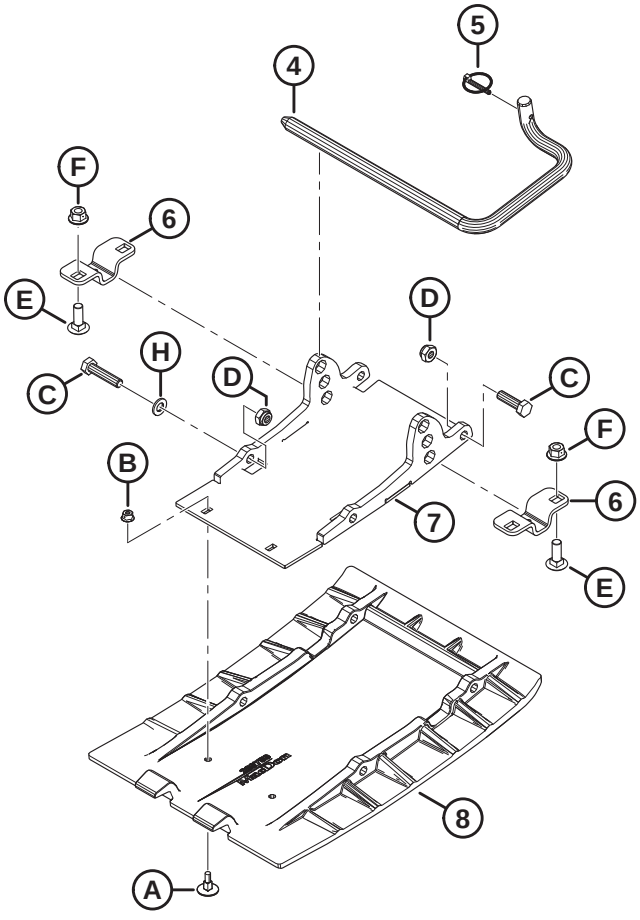

1043569

SKID SHOES – END AND CENTER

Ref	Part Number	Description	Qty	Serial Number
1	312680	MOUNT WELDT – SKID SHOE (END)	2	
	312777	KIT – OUTER SHOE MOUNT C/W PIN [251]	A/R	
2	313965	ASSY – PIN (SERVICE ONLY) [252]	A/R	
3	312675	ROD – ENGAGING	2	
	312777	KIT – OUTER SHOE MOUNT C/W PIN [251]	A/R	
4	165588	ROD – ENGAGING RH [253]	2	
	165168	ROD – ENGAGING LH [253]	2	
5	50193	PIN – LYNCH [254]	6	
6	232806	BRACKET – SHOE SUPPORT [255]	8	
7	289869	SUPPORT WELDT – PLATE [254]	6	
8	289759	SHOE – WEARPLATE, POLYETHYLENE [254]	6	
A	252176	BOLT – ELEV CSK M6 X 1 X 23-8.8		
B	152668	NUT – HEX FLG CTR LOC M6 X 1-8		
C	135335	BOLT – HEX HD M10 X 1.5 X 45-8.8-AA1J		
D	184692	NUT – HEX NYLOC M10 X 1.5-8-AA1J		
E	184662	BOLT – RHSN TFL M10 X 1.5 X 30-8.8-AA1J		
F	135799	NUT – HEX FLG CTR LOC M10 X 1.5-10		
G	136399	BOLT – HEX FLG HD TFL M12 X 1.75 X 25-8.8-AA1J		
H	184711	WASHER – FLAT REG M10-200HV-AA1J		

251. The kit includes end skid shoe mount (MD #312680), engaging rod (MD #312675), and lynch pin (MD #50193). Kit is used to service headers with superseded mounts (MD #251872) and superseded rods (MD #232674).
252. Pin assembly includes lock pin (MD #23370) and spring pin (MD #30907). Pin assembly (MD #313965) remains available for service only.
253. Right engaging rod is shown in the illustration. Quantities of RH engaging rod (MD #165588) and LH engaging rod (MD #165168) are one of each for FD225 headers, and two of each for FD230–FD250 headers.
254. Quantities: FD225 = 4, FD230–FD250 = 6.
255. Orientation of this bracket varies, be sure to install as per shown for each center skid shoe. Compare location of small hole with arrows. Quantities: FD225 = 4, FD230–FD250 = 8.

70 Hydraulics – Manifold Fittings and Fasteners

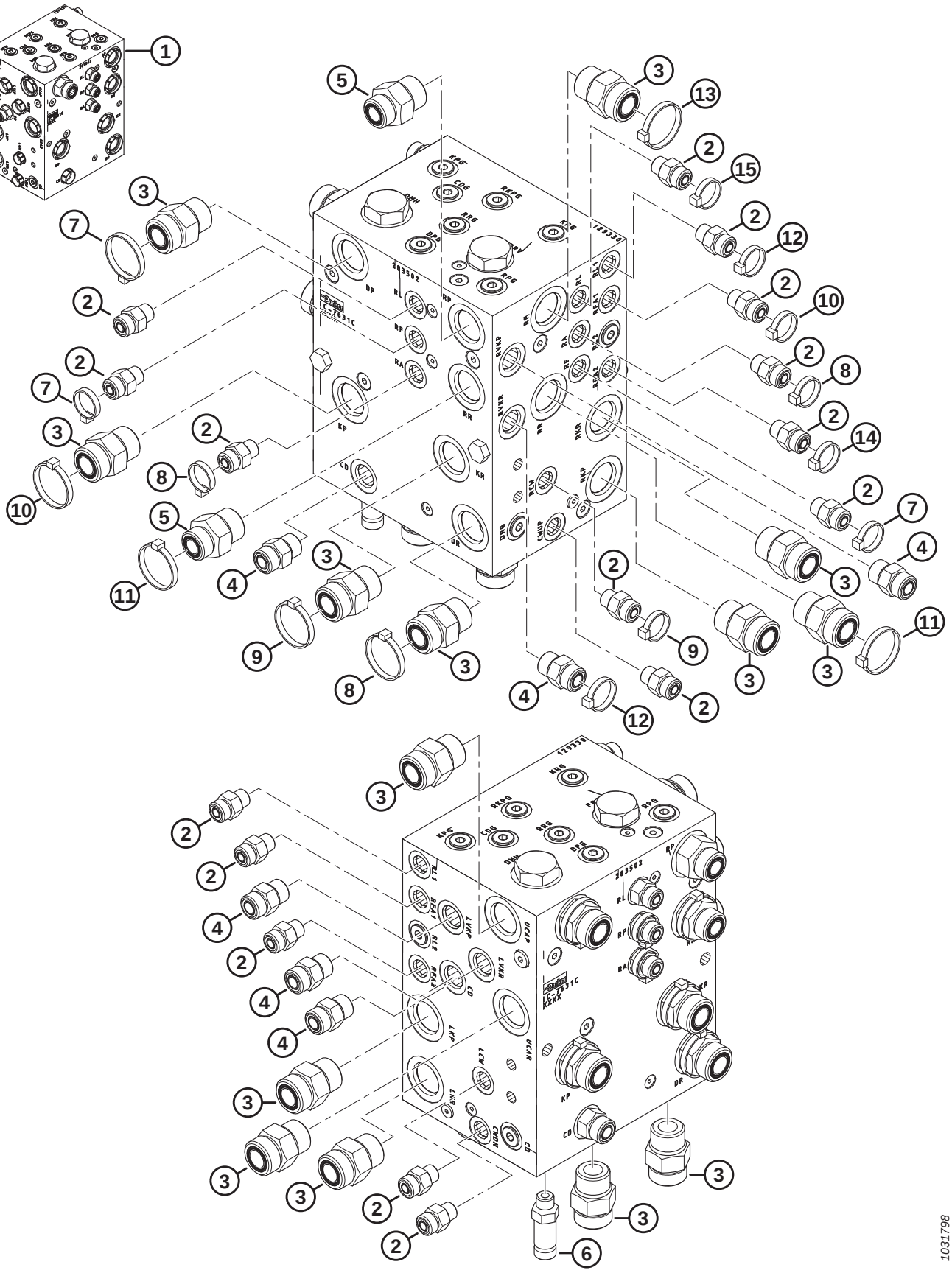

Ref	Part Number	Description	Qty	Serial Number
1	283502	MANIFOLD ASSY – DK UNTIMED [256]	A/R	
	283500	MANIFOLD ASSY – SK [257]	A/R	
2	135778	FITTING – ADAPTER	15	
	50219	O-RING – Ø1.98 X Ø11.89		
	135865	O-RING – Ø1.78 X Ø9.25		
3	135788	FITTING – ADAPTER	14	
	30971	O-RING – Ø2.95 X Ø23.47		
	135868	O-RING – Ø1.78 X Ø18.77		
4	135780	FITTING – ADAPTER	6	
	44209	O-RING – Ø2.21 X Ø16.36		
	135866	O-RING – Ø1.78 X Ø12.42		
5	135786	FITTING – ADAPTER	2	
	30971	O-RING – Ø2.95 X Ø23.47		
	135867	O-RING – Ø1.78 X Ø15.60		
6	252902	FITTING – HYD CONNECTOR, LONG	1	
	50219	O-RING – Ø1.98 X Ø11.89		
	135865	O-RING – Ø1.78 X Ø9.25		
7	49227	FASTENER – CABLE TIE, GREEN	3	
8	40702	FASTENER – CABLE TIE, RED	3	
9	40703	FASTENER – CABLE TIE, BLUE	2	
10	40704	FASTENER – CABLE TIE, ORANGE	2	
11	40701	FASTENER – CABLE TIE, YELLOW	2	
12	252795	FASTENER – CABLE TIE, PINK	2	
13	49232	FASTENER – CABLE TIE, WHITE	1	
14	135266	FASTENER – CABLE TIE, LIGHT BLUE	1	
15	21763	FASTENER – CABLE TIE, BLACK	1	

256. Manifold assembly (MD #283502) includes 12 plugs (MD #100577), 2 plugs (MD #103575), 12 fittings (MD #135778), 1 fitting (MD #135780), 4 fittings (MD #135788), 1 plug (MD #136524), 3 plugs (MD #158174), and 2 plugs (MD #283567). For manifold plugs, refer to Section *71 Hydraulics – Manifold Plugs, page 165*.

257. Manifold assembly (MD #283500) includes 10 plugs (MD #100577), 2 plugs (MD #103575), 12 fittings (MD #135778), 1 fitting (MD #135780), 2 fittings (MD #135788), 2 plugs (MD #136269), 1 plug (MD #136524), 2 plugs (MD #158174), and 2 plugs (MD #283567). For manifold plugs, refer to Section *71 Hydraulics – Manifold Plugs, page 165*.

71 Hydraulics – Manifold Plugs

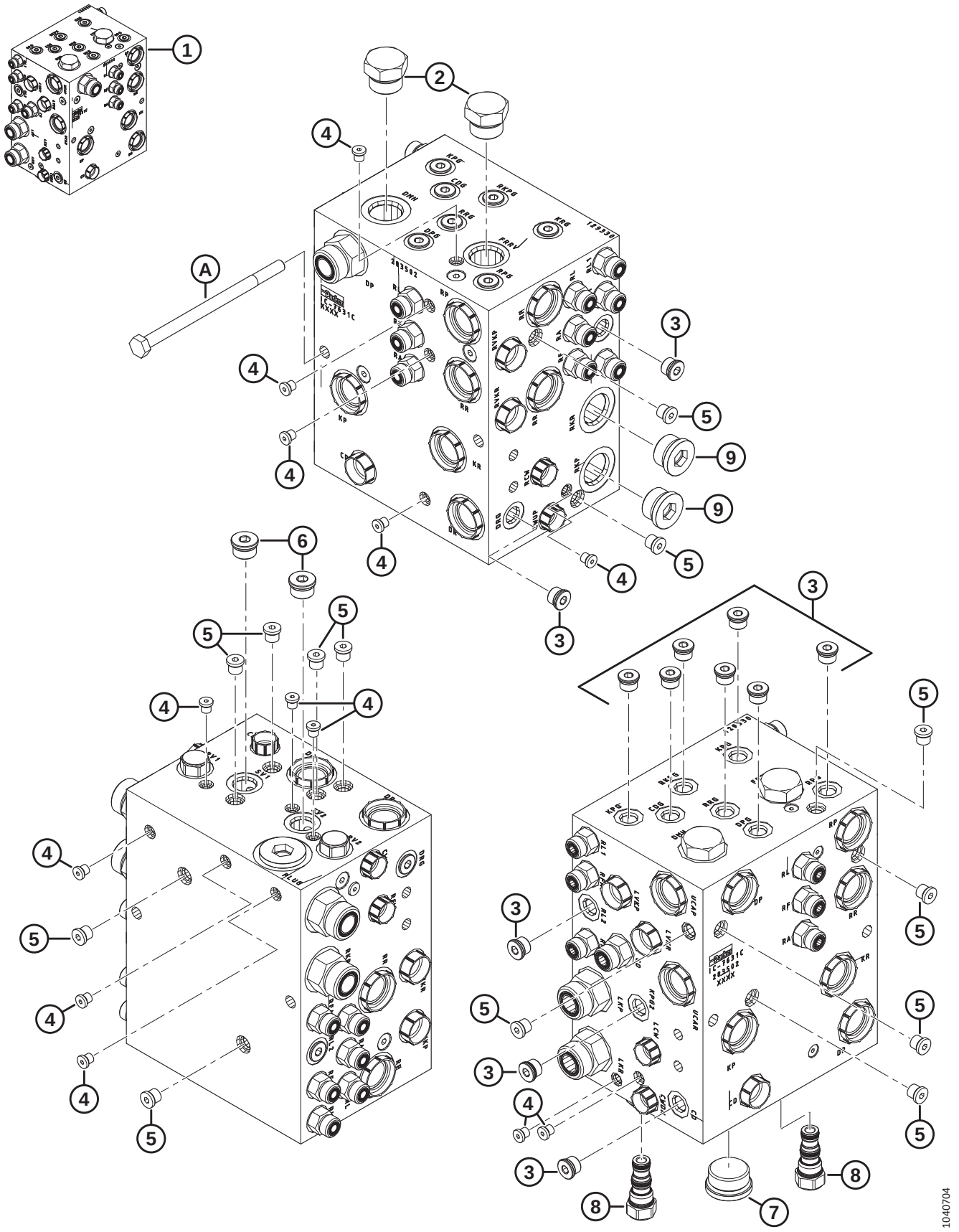

Ref	Part Number	Description	Qty	Serial Number
1	283502	MANIFOLD ASSY – DK UNTIMED [258]	A/R	
	283500	MANIFOLD ASSY – SK [259]	A/R	
2	103575	PLUG – HEX C/W O-RING	2	
3	100577	PLUG – HEX SOCKET C/W O-RING	12	
	50219	O-RING – Ø1.98 X Ø11.89		
4	135952	PLUG – HEX SOCKET C/W O-RING	13	
5	102711	PLUG – HEX SOCKET C/W O-RING	13	
6	158174	PLUG – HEX SOCKET C/W O-RING	2	
	44209	O-RING – Ø2.21 X Ø16.36		
7	136524	PLUG – HEX SOCKET	1	
	50220	O-RING – Ø2.95 X Ø29.74		
8	283567	PLUG – CAVITY	2	
	283569	SEAL KIT		
9	136269	FITTING – PLUG HYD 12 ORB HEX SOC [260]	2	
	30971	O-RING – Ø2.95 X Ø23.47		
A	136850	BOLT – HEX HD M10 X 1.5 X 160-8.8-AA1J		

258. Manifold assembly (MD #283502) includes 12 plugs (MD #100577), 2 plugs (MD #103575), 12 fittings (MD #135778), 1 fitting (MD #135780), 4 fittings (MD #135788), 1 plug (MD #136524), 3 plugs (MD #158174), and 2 plugs (MD #283567). For manifold plugs, refer to Section *70 Hydraulics – Manifold Fittings and Fasteners, page 163*.
259. Manifold assembly (MD #283500) includes 10 plugs (MD #100577), 2 plugs (MD #103575), 12 fittings (MD #135778), 1 fitting (MD #135780), 2 fittings (MD #135788), 2 plugs (MD #136269), 1 plug (MD #136524), 2 plugs (MD #158174), and 2 plugs (MD #283567). For manifold fittings, refer to Section *70 Hydraulics – Manifold Fittings and Fasteners, page 163*.
260. Single-knife configurations only.

72 Hydraulics – Knife Drive, Single and Double Knife, Left Side (FD225, FD230, FD235, FD240, FD241, and FD245)

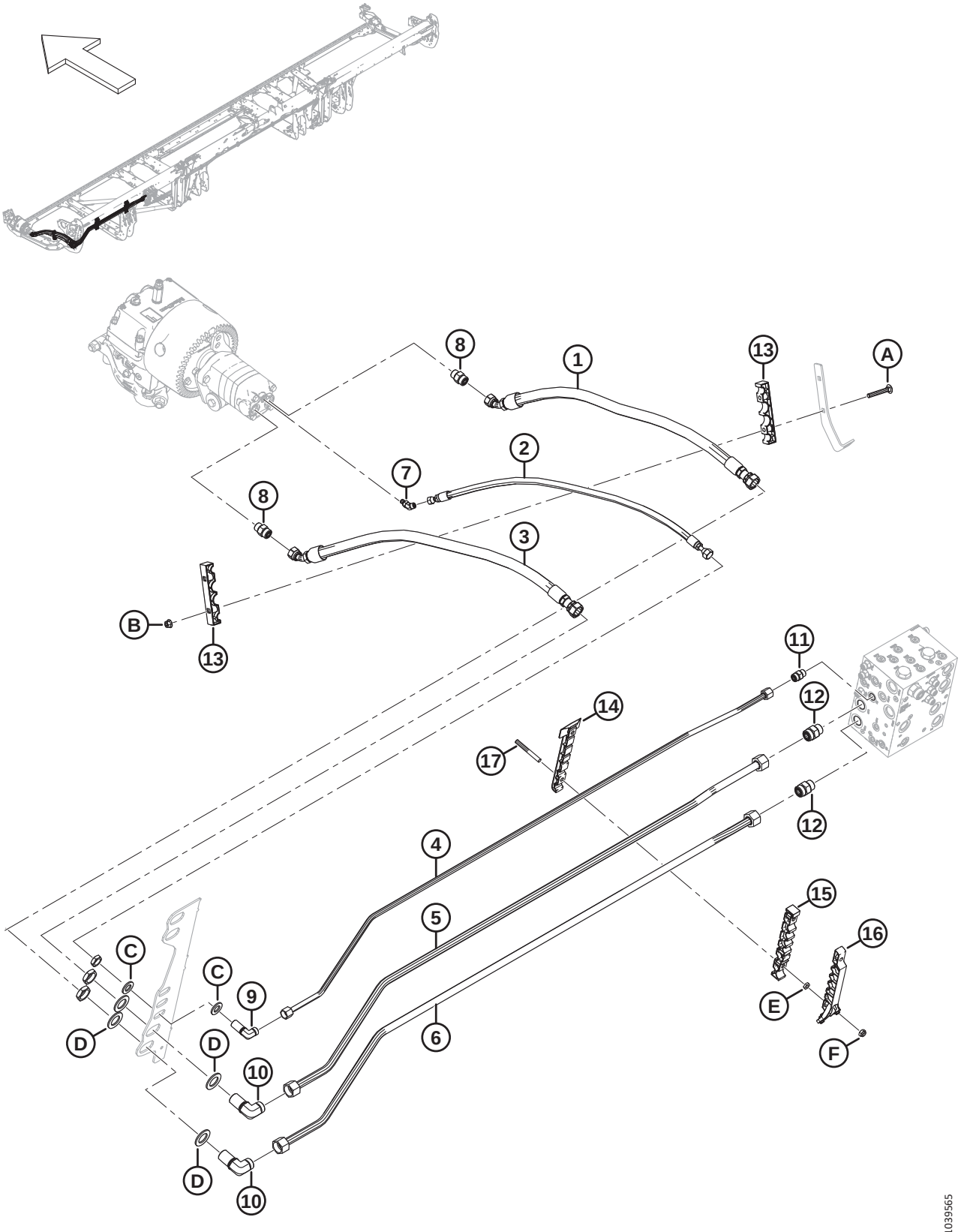

Ref	Part Number	Description	Qty	Serial Number
1	283063	HOSE – HYD	1	
2	283065	HOSE – HYD	1	
3	283202	HOSE – HYD	1	
4	283233	LINE – HYDRAULIC (FD225) [261]	1	
	283048	LINE – HYDRAULIC (FD230) [262]	1	
	283201	LINE – HYDRAULIC (FD235) [263]	1	
	283411	LINE – HYDRAULIC (FD240) [264]	1	
	283458	LINE – HYDRAULIC (FD241) [265]	1	
	283411	LINE – HYDRAULIC (FD245) [266]	1	
5	283232	LINE – HYDRAULIC (FD225) [267]	1	
	283047	LINE – HYDRAULIC (FD230) [268]	1	
	283104	LINE – HYDRAULIC (FD235) [269]	1	
	283410	LINE – HYDRAULIC (FD240) [270]	1	
	283457	LINE – HYDRAULIC (FD241) [271]	1	
	283410	LINE – HYDRAULIC (FD245) [272]	1	
6	283231	LINE – HYDRAULIC (FD225) [267]	1	
	283046	LINE – HYDRAULIC (FD230) [268]	1	
	283102	LINE – HYDRAULIC (FD235) [269]	1	
	283409	LINE – HYDRAULIC (FD240) [270]	1	
	283456	LINE – HYDRAULIC (FD241) [271]	1	
	283409	LINE – HYDRAULIC (FD245) [272]	1	
7	252307	FITTING – ELBOW 45° HYD	1	
	50223	O-RING – Ø1.83 X Ø8.92		
	135957	O-RING – Ø1.78 X Ø7.65		
8	184461	FITTING – ADAPTER HYD	2	
	44210	O-RING – Ø2.46 X Ø19.18		
	135867	O-RING – Ø1.78 X Ø15.60		
9	136244	FITTING – ELBOW 90° BULKHEAD HYD [273]	1	
	135866	O-RING – Ø1.78 X Ø12.42		

261. Used for FD225 headers.
262. Used for FD230 headers.
263. Used for FD235 headers.
264. Used for FD240 headers.
265. Used for FD241 headers.
266. Used for FD245 headers.
267. Used for FD225 headers.
268. Used for FD230 headers.
269. Used for FD235 headers.
270. Used for FD240 headers.
271. Used for FD241 headers.
272. Used for FD245 headers.
273. The fitting includes a securing nut.

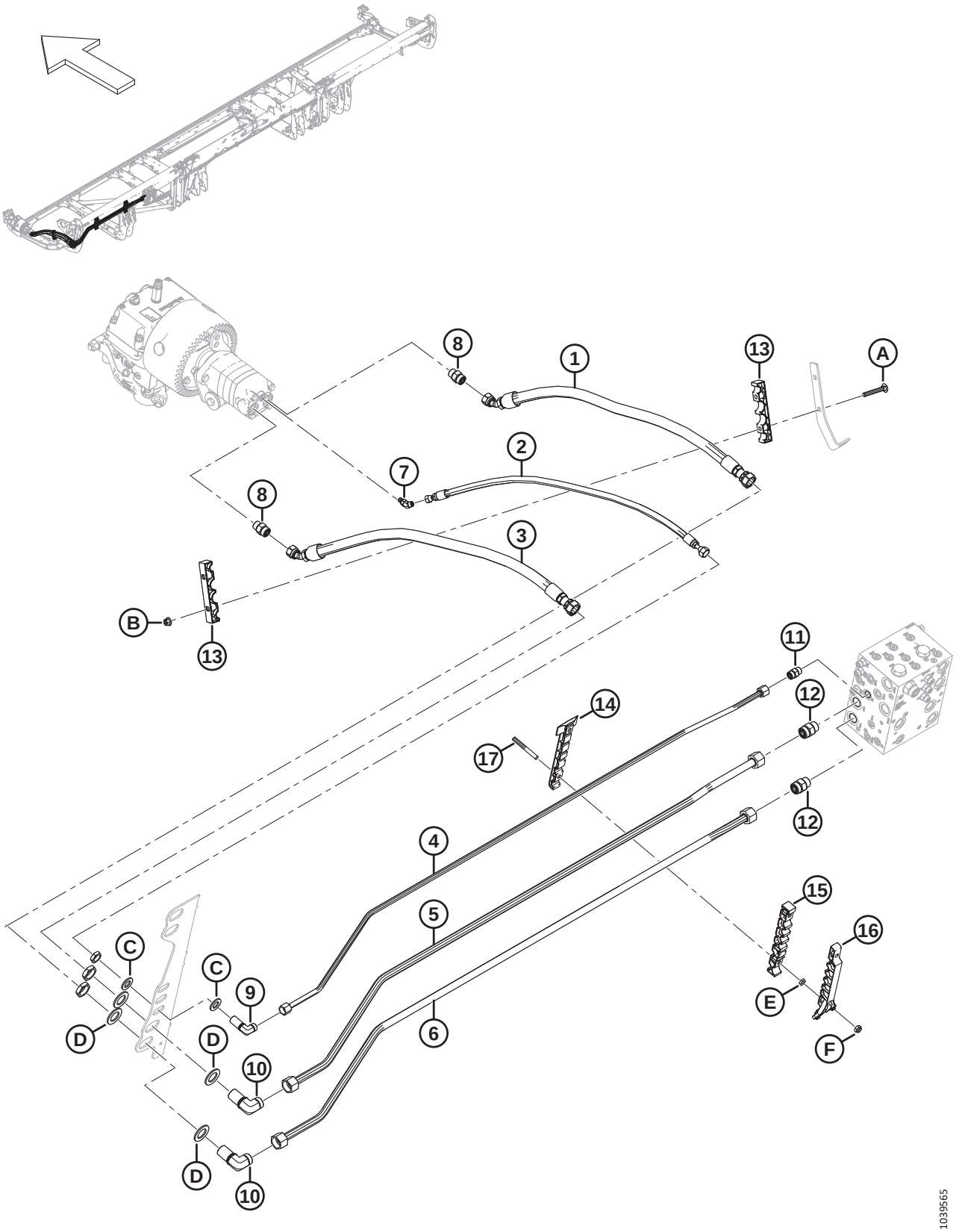
8
1
13
A
2
7
8
3
B
13
11
12
14
17
12
4
5
6
15
16
E
F
C
C
9
D
D
10
D
10
1039565

Ref	Part Number	Description	Qty	Serial Number
10	136245	FITTING – ELBOW 90° BULKHEAD HYD [273]	2	
	135868	O-RING – Ø1.78 X Ø18.77		
11	135780	FITTING – ADAPTER	1	
	44209	O-RING – Ø2.21 X Ø16.36		
	135866	O-RING – Ø1.78 X Ø12.42		
12	135788	FITTING – ADAPTER	2	
	30971	O-RING – Ø2.95 X Ø23.47		
	135868	O-RING – Ø1.78 X Ø18.77		
13	283984	CLAMP – LINE KNIFE	2	
14	283797	CLAMP – LINE BOTTOM LH [274]		
15	283807	CLAMP – LINE MIDDLE LH [274]		
16	311233	CLAMP – LINE TOP LH [274]		
17	312654	STUD – THRD CLAMP PATCH WING [275]		
A	136495	BOLT – RHSN M10 X 1.5 X 70-8.8-AA1J	2	
B	135799	NUT – HEX FLG CTR LOC M10 X 1.5-10	2	
C	18601	WASHER – FLAT SAE	2	
D	136355	WASHER – FLAT 2.0 IN OD ZP	4	
E	136442	NUT – HEX THIN M10 X 1.5-05-AA1J		
F	184692	NUT – HEX NYLOC M10 X 1.5-8-AA1J		

274. Quantities: FD225 = 1, FD230 = 2, FD235 = 3, FD240 = 4, FD241 = 4, and FD245 = 4.
275. Quantities: FD225 = 2, FD230 = 4, FD235 = 6, FD240 = 8, FD241 = 8, and FD245 = 8.

73 Hydraulics – Knife Drive, Double Knife, Left Side (FD250)

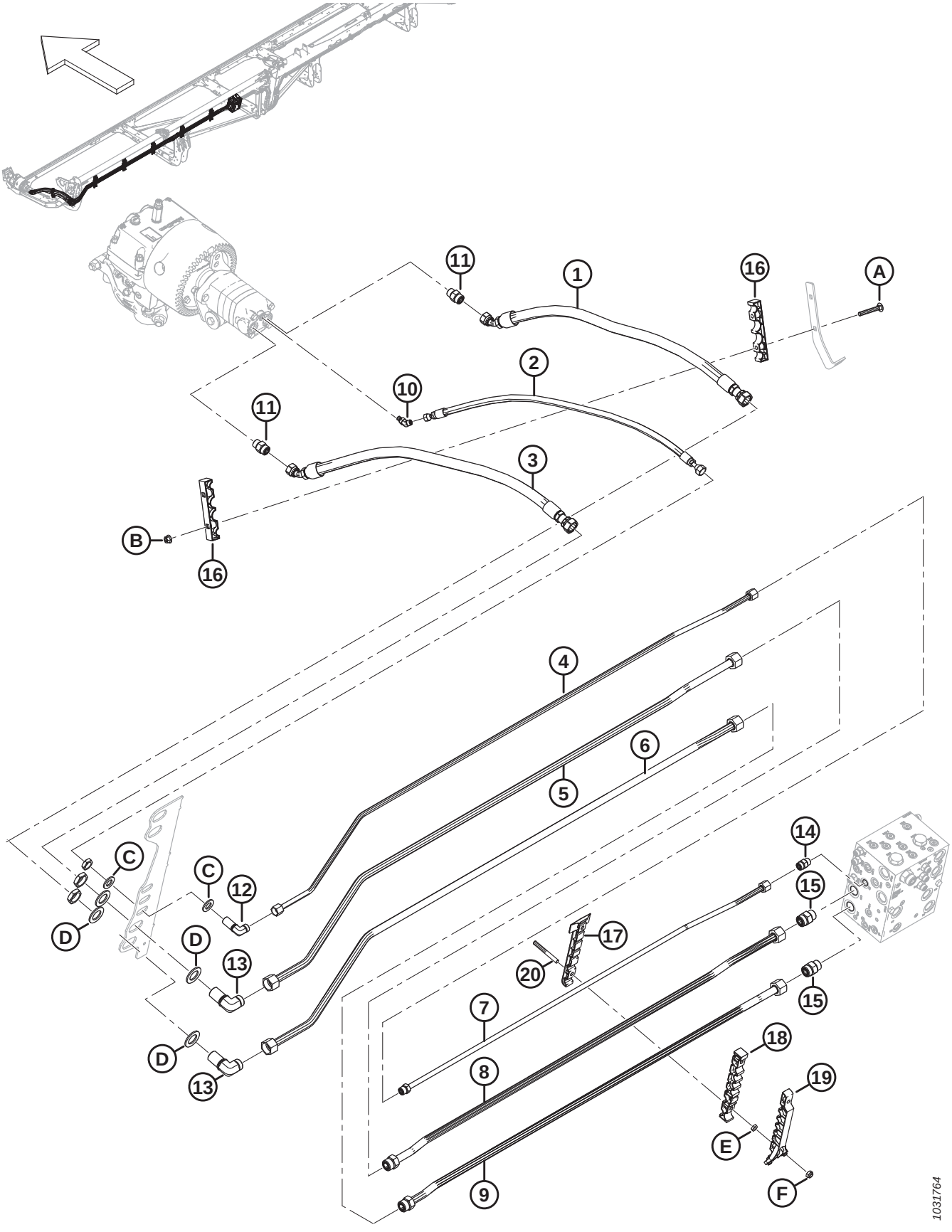

Ref	Part Number	Description	Qty	Serial Number
1	283063	HOSE – HYD	1	
2	283065	HOSE – HYD	1	
3	283202	HOSE – HYD	1	
4	283465	LINE – HYDRAULIC (FD250)	1	
5	283464	LINE – HYDRAULIC (FD250)	1	
6	283463	LINE – HYDRAULIC (FD250)	1	
7	283174	LINE – HYDRAULIC (FD250)	1	
	135866	O-RING – Ø1.78 X Ø12.42		
8	283173	LINE – HYDRAULIC (FD250)	1	
	135868	O-RING – Ø1.78 X Ø18.77		
9	283172	LINE – HYDRAULIC (FD250)	1	
	135868	O-RING – Ø1.78 X Ø18.77		
10	252307	FITTING – ELBOW 45° HYD	1	
	50223	O-RING – Ø1.83 X Ø8.92		
	135957	O-RING – Ø1.78 X Ø7.65		
11	184461	FITTING – ADAPTER HYD	2	
	44210	O-RING – Ø2.46 X Ø19.18		
	135867	O-RING – Ø1.78 X Ø15.60		
12	136244	FITTING – ELBOW 90° BULKHEAD HYD [276]	1	
	135866	O-RING – Ø1.78 X Ø12.42		
13	136245	FITTING – ELBOW 90° BULKHEAD HYD [276]	2	
	135868	O-RING – Ø1.78 X Ø18.77		
14	135780	FITTING – ADAPTER	1	
	44209	O-RING – Ø2.21 X Ø16.36		
	135866	O-RING – Ø1.78 X Ø12.42		
15	135788	FITTING – ADAPTER	2	
	30971	O-RING – Ø2.95 X Ø23.47		
	135868	O-RING – Ø1.78 X Ø18.77		
16	283984	CLAMP – LINE KNIFE	2	
17	283797	CLAMP – LINE BOTTOM LH	5	
18	283807	CLAMP – LINE MIDDLE LH	5	
19	311233	CLAMP – LINE TOP LH	5	
20	312654	STUD – THRD CLAMP PATCH WING	10	
A	136495	BOLT – RHSN M10 X 1.5 X 70-8.8-AA1J		
B	135799	NUT – HEX FLG CTR LOC M10 X 1.5-10		
C	18601	WASHER – FLAT SAE		
D	136355	WASHER – FLAT 2.0 IN OD ZP		
E	136442	NUT – HEX THIN M10 X 1.5-05-AA1J		
F	184692	NUT – HEX NYLOC M10 X 1.5-8-AA1J		

276. The fitting includes a securing nut.

74 Hydraulics – Knife Drive, Double Knife, Right Side (FD235, FD240, and FD241)

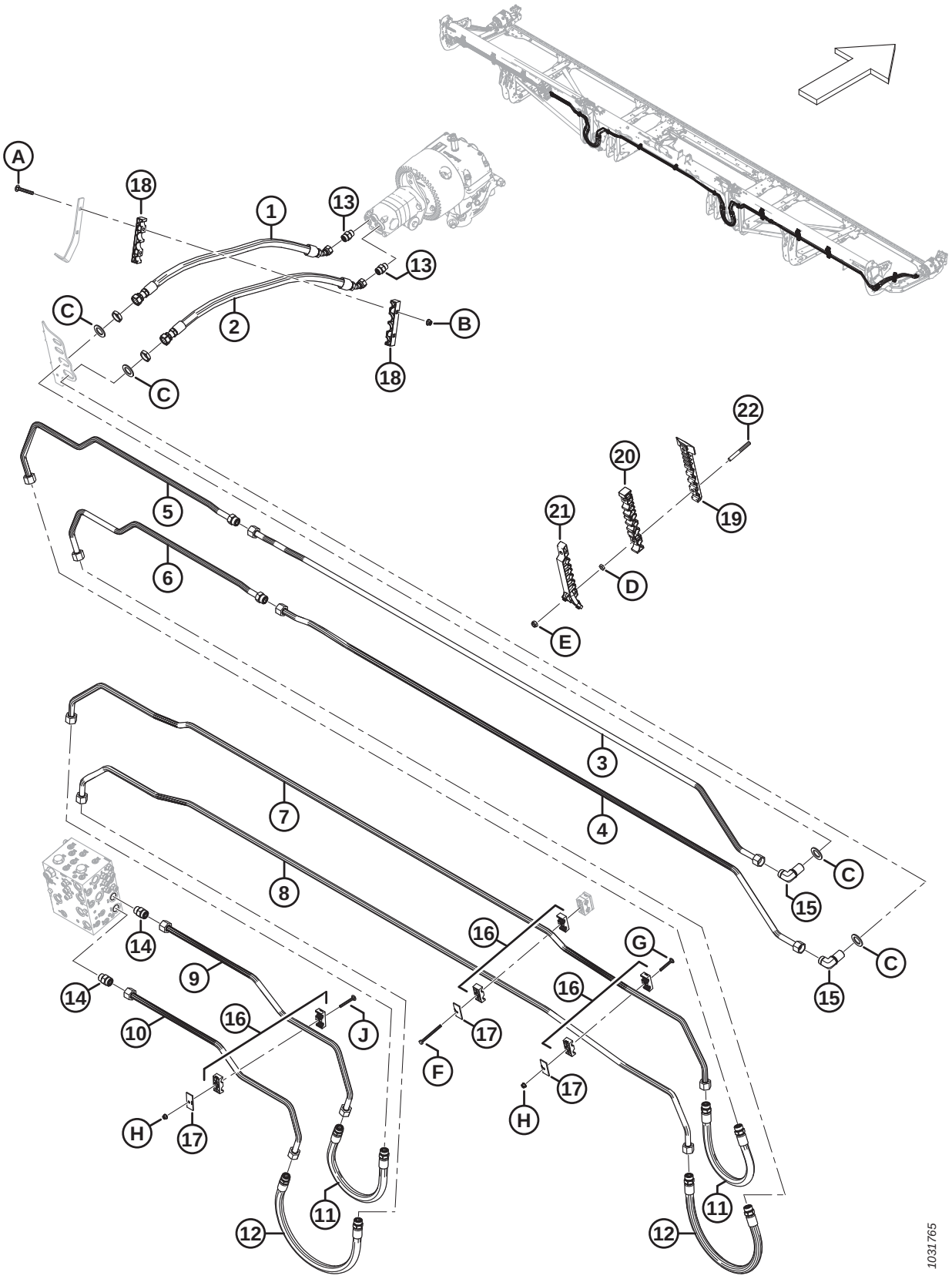

Ref	Part Number	Description	Qty	Serial Number
1	283202	HOSE – HYD	1	
2	283063	HOSE – HYD	1	
3	283413	LINE – HYDRAULIC (FD235–FD241)	1	
4	283412	LINE – HYDRAULIC (FD235–FD241)	1	
5	283203	LINE – HYDRAULIC (FD235) [277]	1	
	283422	LINE – HYDRAULIC (FD240) [278]	1	
	283427	LINE – HYDRAULIC (FD241) [279]	1	
	135868	O-RING – Ø1.78 X Ø18.77		
6	283204	LINE – HYDRAULIC (FD235) [280]	1	
	283421	LINE – HYDRAULIC (FD240) [281]	1	
	283426	LINE – HYDRAULIC (FD241) [282]	1	
	135868	O-RING – Ø1.78 X Ø18.77		
7	283036	LINE – HYDRAULIC (FD235–FD241)	1	
8	283035	LINE – HYDRAULIC (FD235–FD241)	1	
9	283069	LINE – HYDRAULIC (FD235–FD241)	1	
10	283068	LINE – HYDRAULIC (FD235–FD241)	1	
11	283070	HOSE – HYD	2	
	135868	O-RING – Ø1.78 X Ø18.77		
12	283378	HOSE – HYD	2	
	135868	O-RING – Ø1.78 X Ø18.77		
13	184461	FITTING – ADAPTER HYD	2	
	44210	O-RING – Ø2.46 X Ø19.18		
	135867	O-RING – Ø1.78 X Ø15.60		
14	135788	FITTING – ADAPTER	2	
	30971	O-RING – Ø2.95 X Ø23.47		
	135868	O-RING – Ø1.78 X Ø18.77		
15	136245	FITTING – ELBOW 90° BULKHEAD HYD [283]	2	
	135868	O-RING – Ø1.78 X Ø18.77		
16	232397	CLAMP – ASSY [284]	6	
17	232233	CLAMP – COVER PLATE	6	
18	283984	CLAMP – LINE KNIFE	2	
19	283797	CLAMP – LINE BOTTOM LH		
20	283807	CLAMP – LINE MIDDLE LH		
21	311233	CLAMP – LINE TOP LH		
22	312654	STUD – THRD CLAMP PATCH WING		

277. Used for FD235 headers.
278. Used for FD240 headers.
279. Used for FD241 headers.
280. Used for FD235 headers.
281. Used for FD240 headers.
282. Used for FD241 headers.
283. The fitting includes a securing nut (NSS).
284. The clamp assembly includes two clamp halves (NSS). It does NOT include the cover plate or hardware.

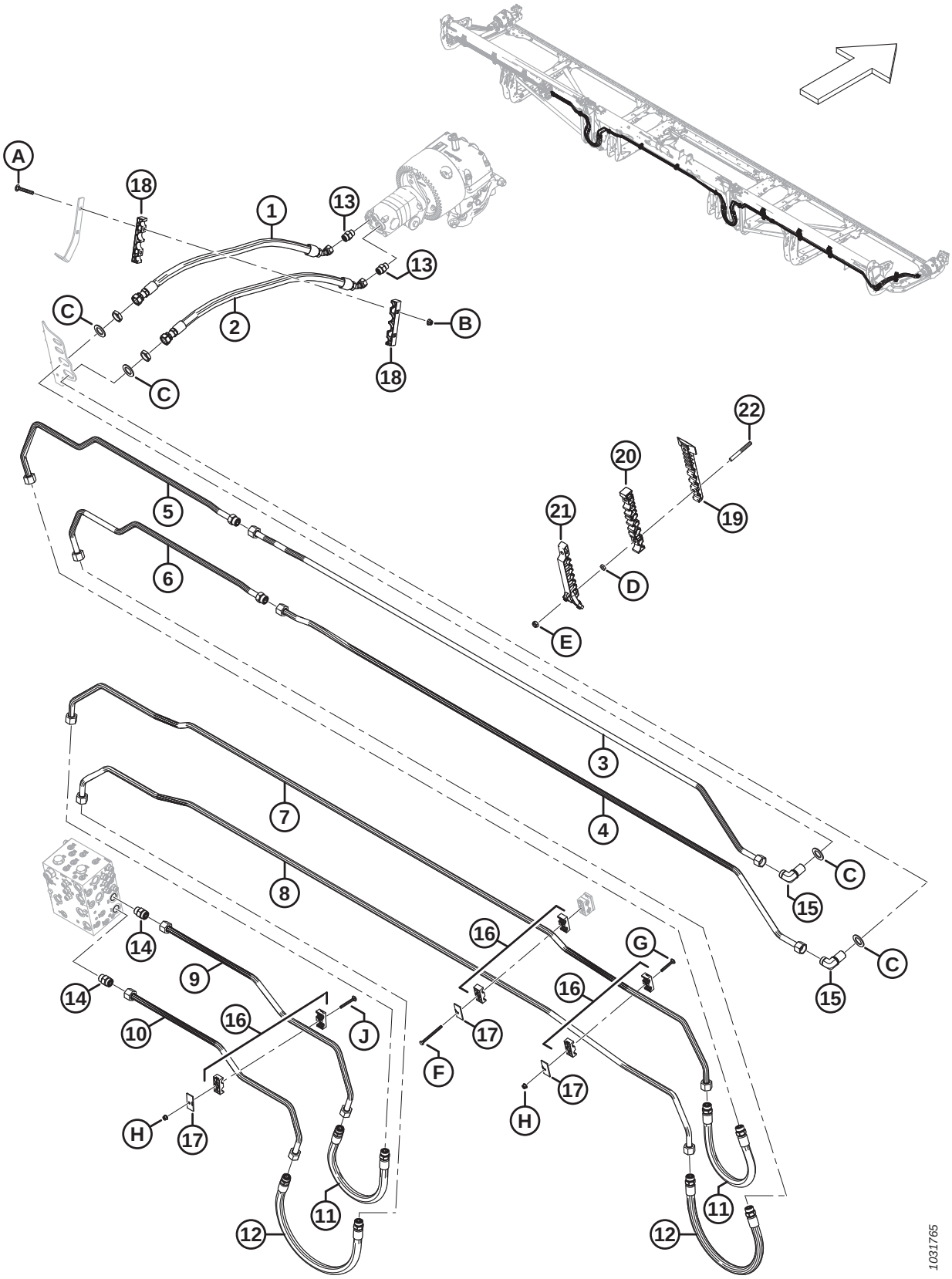
A
18
1
13
13
C
2
B
18
C
22
20
19
21
D
E
5
6
3
4
C
15
C
15
7
8
14
9
14
10
16
J
16
17
F
16
G
17
H
H
17
11
12
11
12
1031765

Ref	Part Number	Description	Qty	Serial Number
A	136495	BOLT – RHSN M10 X 1.5 X 70-8.8-AA1J		
B	135799	NUT – HEX FLG CTR LOC M10 X 1.5-10		
C	136355	WASHER – FLAT 2.0 IN OD ZP		
D	136442	NUT – HEX THIN M10 X 1.5-05-AA1J		
E	184692	NUT – HEX NYLOC M10 X 1.5-8-AA1J		
F	252002	BOLT – HEX HD M8 X 1.25 X 100-8.8-AA1J		
G	136486	BOLT – RHSN M8 X 1.25 X 60-8.8-AA1J		
H	135337	NUT – HEX FLG CTR LK M8 X 1.25-8-AA1J		
J	136779	BOLT – RHSN M8 X 1.25 X 70-8.8-AA1J		

75 Hydraulics – Knife Drive, Double Knife, Right Side (FD245 and FD250)

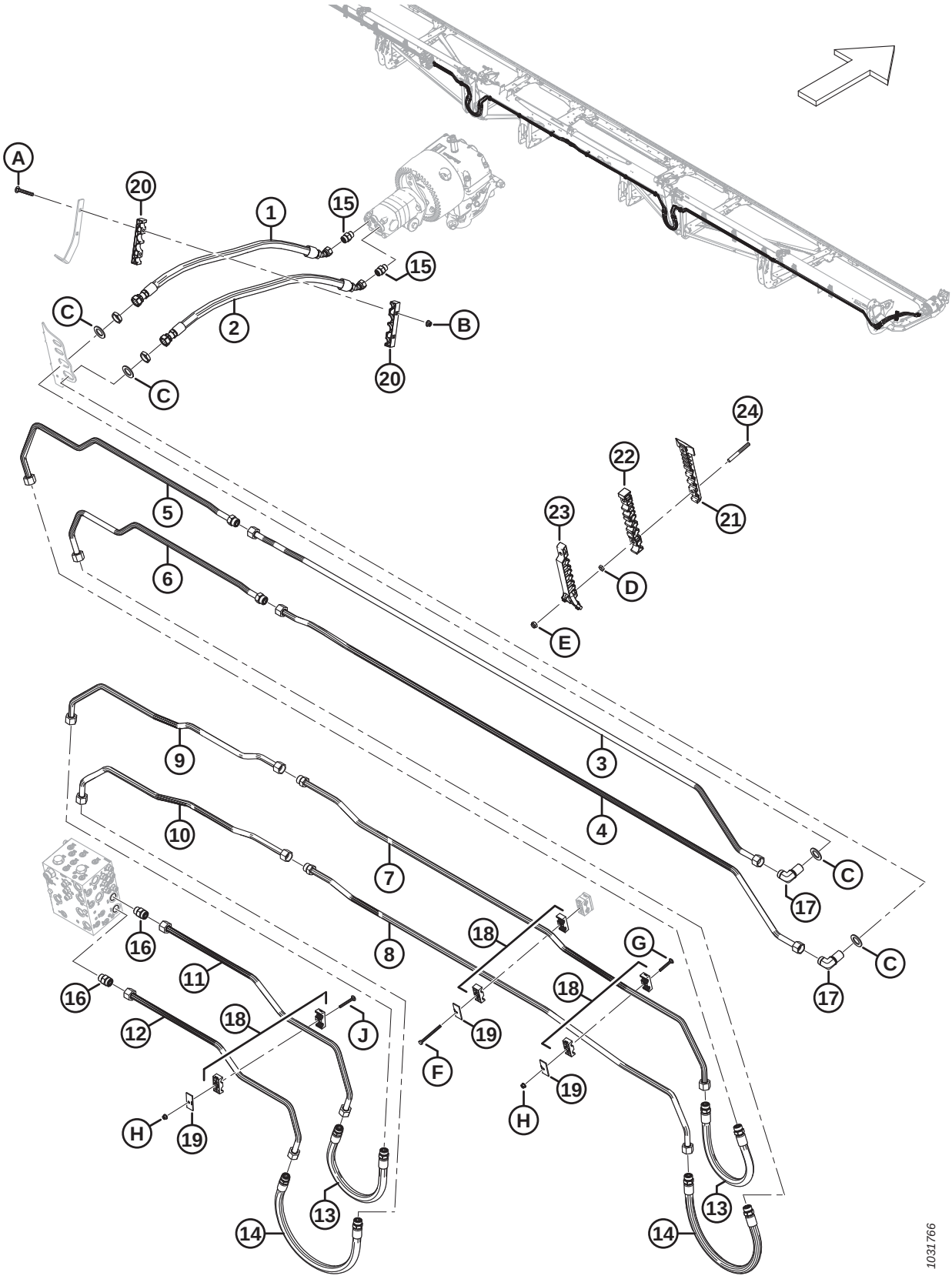

Ref	Part Number	Description	Qty	Serial Number
1	283202	HOSE – HYD	1	
2	283063	HOSE – HYD	1	
3	283413	LINE – HYDRAULIC (FD245 AND FD250)	1	
4	283412	LINE – HYDRAULIC (FD245 AND FD250)	1	
5	283422	LINE – HYDRAULIC (FD245) [285]	1	
	283176	LINE – HYDRAULIC (FD250) [286]	1	
	135868	O-RING – Ø1.78 X Ø18.77		
6	283421	LINE – HYDRAULIC (FD245) [287]	1	
	283175	LINE – HYDRAULIC (FD250) [288]	1	
	135868	O-RING – Ø1.78 X Ø18.77		
7	283443	LINE – HYDRAULIC (FD245 AND FD250)	1	
	135868	O-RING – Ø1.78 X Ø18.77		
8	283441	LINE – HYDRAULIC (FD245 AND FD250)	1	
	135868	O-RING – Ø1.78 X Ø18.77		
9	283442	LINE – HYDRAULIC (FD245 AND FD250)	1	
10	283440	LINE – HYDRAULIC (FD245 AND FD250)	1	
11	283069	LINE – HYDRAULIC (FD245 AND FD250)	1	
12	283068	LINE – HYDRAULIC (FD245 AND FD250)	1	
13	283070	HOSE – HYD	2	
	135868	O-RING – Ø1.78 X Ø18.77		
14	283378	HOSE – HYD	2	
	135868	O-RING – Ø1.78 X Ø18.77		
15	184461	FITTING – ADAPTER HYD	2	
	44210	O-RING – Ø2.46 X Ø19.18		
	135867	O-RING – Ø1.78 X Ø15.60		
16	135788	FITTING – ADAPTER	2	
	30971	O-RING – Ø2.95 X Ø23.47		
	135868	O-RING – Ø1.78 X Ø18.77		
17	136245	FITTING – ELBOW 90° BULKHEAD HYD [289]	2	
	135868	O-RING – Ø1.78 X Ø18.77		
18	232397	CLAMP – ASSY [290]	6	
19	232233	CLAMP – COVER PLATE	6	
20	283984	CLAMP – LINE KNIFE	2	
21	283797	CLAMP – LINE BOTTOM LH [291]		
22	283807	CLAMP – LINE MIDDLE LH [291]		
23	311233	CLAMP – LINE TOP LH [291]		

285. Used for FD245 headers.
286. Used for FD250 headers.
287. Used for FD245 headers.
288. Used for FD250 headers.
289. The fitting includes a securing nut (NSS).
290. The clamp assembly includes two clamp halves (NSS). It does NOT include the cover plate or hardware.
291. Quantities: FD245 = 4 and FD250 = 4.

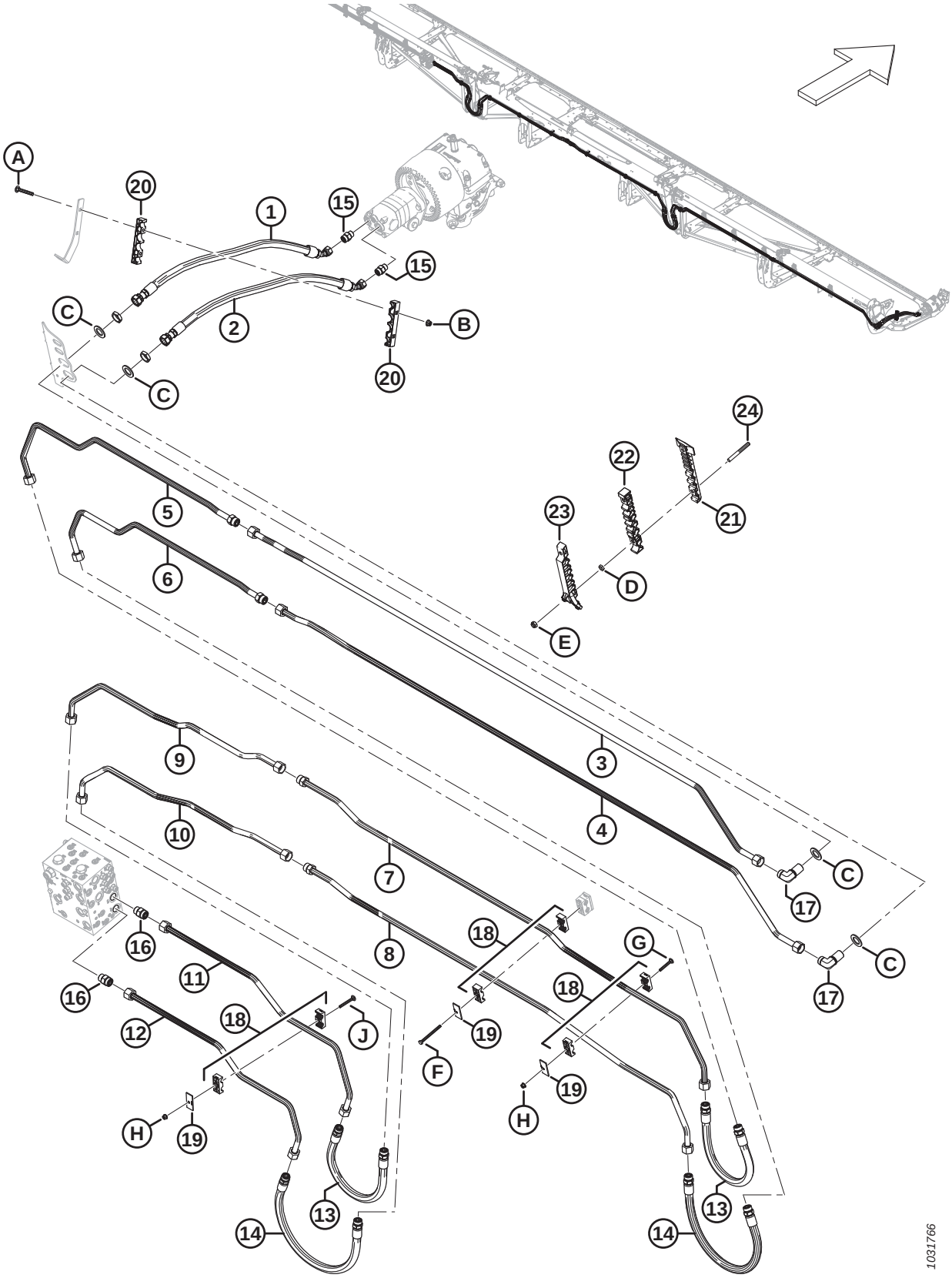
A
20
1
15
15
C
2
B
20
C
24
22
21
23
D
E
5
6
9
3
10
4
7
C
17
8
18
G
16
11
18
16
12
J
19
F
H
19
19
H
13
14
13
14
1031766

Ref	Part Number	Description	Qty	Serial Number
24	312654	STUD – THRD CLAMP PATCH WING [292]		
A	136495	BOLT – RHSN M10 X 1.5 X 70-8.8-AA1J		
B	135799	NUT – HEX FLG CTR LOC M10 X 1.5-10		
C	136355	WASHER – FLAT 2.0 IN OD ZP		
D	136442	NUT – HEX THIN M10 X 1.5-05-AA1J		
E	184692	NUT – HEX NYLOC M10 X 1.5-8-AA1J		
F	252002	BOLT – HEX HD M8 X 1.25 X 100-8.8-AA1J		
G	136486	BOLT – RHSN M8 X 1.25 X 60-8.8-AA1J		
H	135337	NUT – HEX FLG CTR LK M8 X 1.25-8-AA1J		
J	136779	BOLT – RHSN M8 X 1.25 X 70-8.8-AA1J		

292. Quantities: FD245 = 8 and FD250 = 8.

76 Hydraulics – Draper Drive (FD225, FD230, FD235, FD240, and FD241)

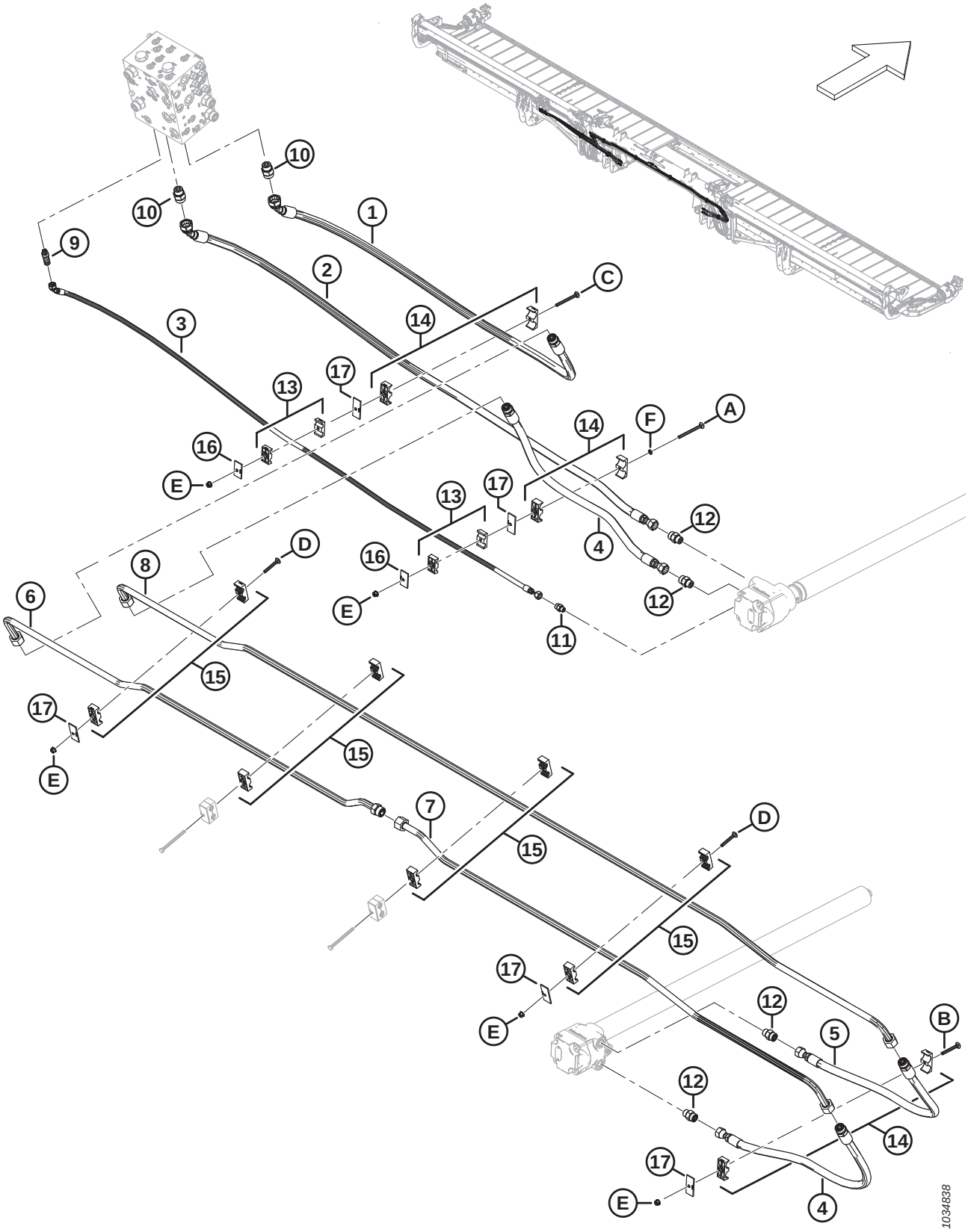

Ref	Part Number	Description	Qty	Serial Number
1	283099	HOSE – HYD	1	
	135868	O-RING – Ø1.78 X Ø18.77		
2	283098	HOSE – HYD	1	
3	283109	HOSE – HYD	1	
4	283091	HOSE – HYD	2	
	135868	O-RING – Ø1.78 X Ø18.77		
5	283108	HOSE – HYD	1	
	135868	O-RING – Ø1.78 X Ø18.77		
6	283038	LINE – HYDRAULIC	1	
	135868	O-RING – Ø1.78 X Ø18.77		
7	283039	LINE – HYDRAULIC	1	
8	283037	LINE – HYDRAULIC	1	
9	252902	FITTING – HYD CONNECTOR, LONG (CD) [293]	1	
	50219	O-RING – Ø1.98 X Ø11.89		
	135865	O-RING – Ø1.78 X Ø9.25		
10	135788	FITTING – ADAPTER (DP, DR) [294]	2	
	30971	O-RING – Ø2.95 X Ø23.47		
	135868	O-RING – Ø1.78 X Ø18.77		
11	135778	FITTING – ADAPTER	1	
	50219	O-RING – Ø1.98 X Ø11.89		
	135865	O-RING – Ø1.78 X Ø9.25		
12	184461	FITTING – ADAPTER HYD	4	
	44210	O-RING – Ø2.46 X Ø19.18		
	135867	O-RING – Ø1.78 X Ø15.60		
13	232395	CLAMP – ASSY [295]	2	
14	232219	CLAMP – ASSY [295]	3	
15	232397	CLAMP – ASSY [295]	4	
16	184303	CLAMP – COVER PLATE	2	
17	232233	CLAMP – COVER PLATE	5	
A	320274	BOLT – RHSN SPCL M8 X 1.25 X 100-8.8-ZINC		
B	136779	BOLT – RHSN M8 X 1.25 X 70-8.8-AA1J		
C	136746	BOLT – RHSN M8 X 1.25 X 90-8.8-AA1J		
D	136486	BOLT – RHSN M8 X 1.25 X 60-8.8-AA1J		
E	135337	NUT – HEX FLG CTR LK M8 X 1.25-8-AA1J		
F	184721	WASHER – NYLON RETAINING 1/4 IN.		

293. Connects to port CD.
294. Connects to port DP and DR.
295. The clamp assembly includes two clamp halves (NSS). It does NOT include the cover plate or hardware.

77 Hydraulics – Draper Drive (FD245 and FD250)

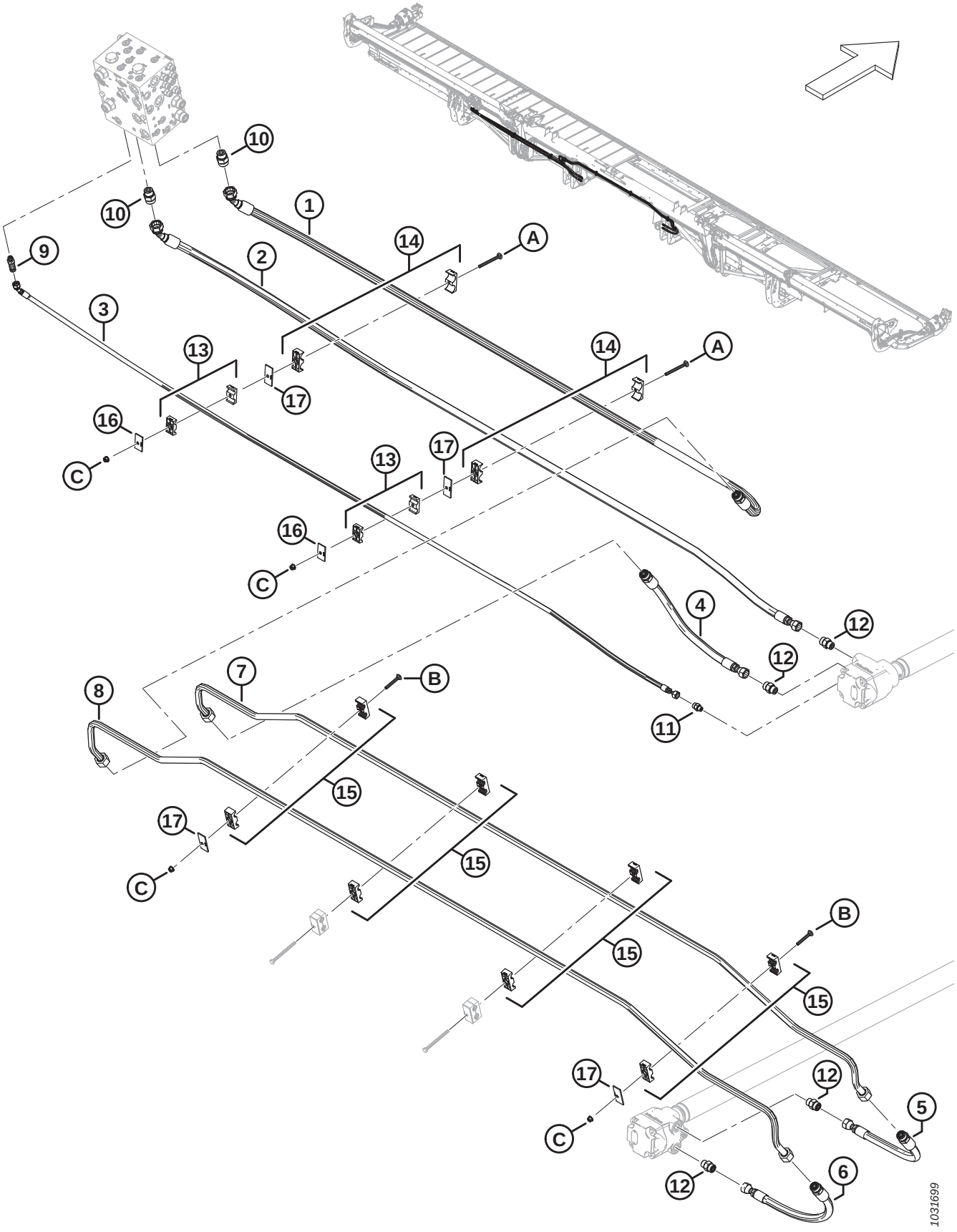

Ref	Part Number	Description	Qty	Serial Number
1	283562	HOSE – HYD	1	
	135868	O-RING – Ø1.78 X Ø18.77		
2	283561	HOSE – HYD	1	
3	283566	HOSE – HYD	1	
4	283563	HOSE – HYD	1	
	135868	O-RING – Ø1.78 X Ø18.77		
5	283564	HOSE – HYD	1	
	135868	O-RING – Ø1.78 X Ø18.77		
6	283565	HOSE – HYD	1	
	135868	O-RING – Ø1.78 X Ø18.77		
7	283508	LINE – HYDRAULIC	1	
8	283509	LINE – HYDRAULIC	1	
9	252902	FITTING – HYD CONNECTOR, LONG	1	
	50219	O-RING – Ø1.98 X Ø11.89		
	135865	O-RING – Ø1.78 X Ø9.25		
10	135788	FITTING – ADAPTER	2	
	30971	O-RING – Ø2.95 X Ø23.47		
	135868	O-RING – Ø1.78 X Ø18.77		
11	135778	FITTING – ADAPTER	1	
	50219	O-RING – Ø1.98 X Ø11.89		
	135865	O-RING – Ø1.78 X Ø9.25		
12	184461	FITTING – ADAPTER HYD	4	
	44210	O-RING – Ø2.46 X Ø19.18		
	135867	O-RING – Ø1.78 X Ø15.60		
13	232395	CLAMP – ASSY [296]	2	
14	232219	CLAMP – ASSY [296]	2	
15	232397	CLAMP – ASSY [296]	4	
16	184303	CLAMP – COVER PLATE	2	
17	232233	CLAMP – COVER PLATE	4	
A	136746	BOLT – RHSN M8 X 1.25 X 90-8.8-AA1J	2	
B	136486	BOLT – RHSN M8 X 1.25 X 60-8.8-AA1J	2	
C	135337	NUT – HEX FLG CTR LK M8 X 1.25-8-AA1J	4	

296. The clamp assembly includes two clamp halves (NSS). It does NOT include the cover plate or hardware.

78 Hydraulics – Lift and Fore-Aft, Single Reel, Left Arm (FD225)

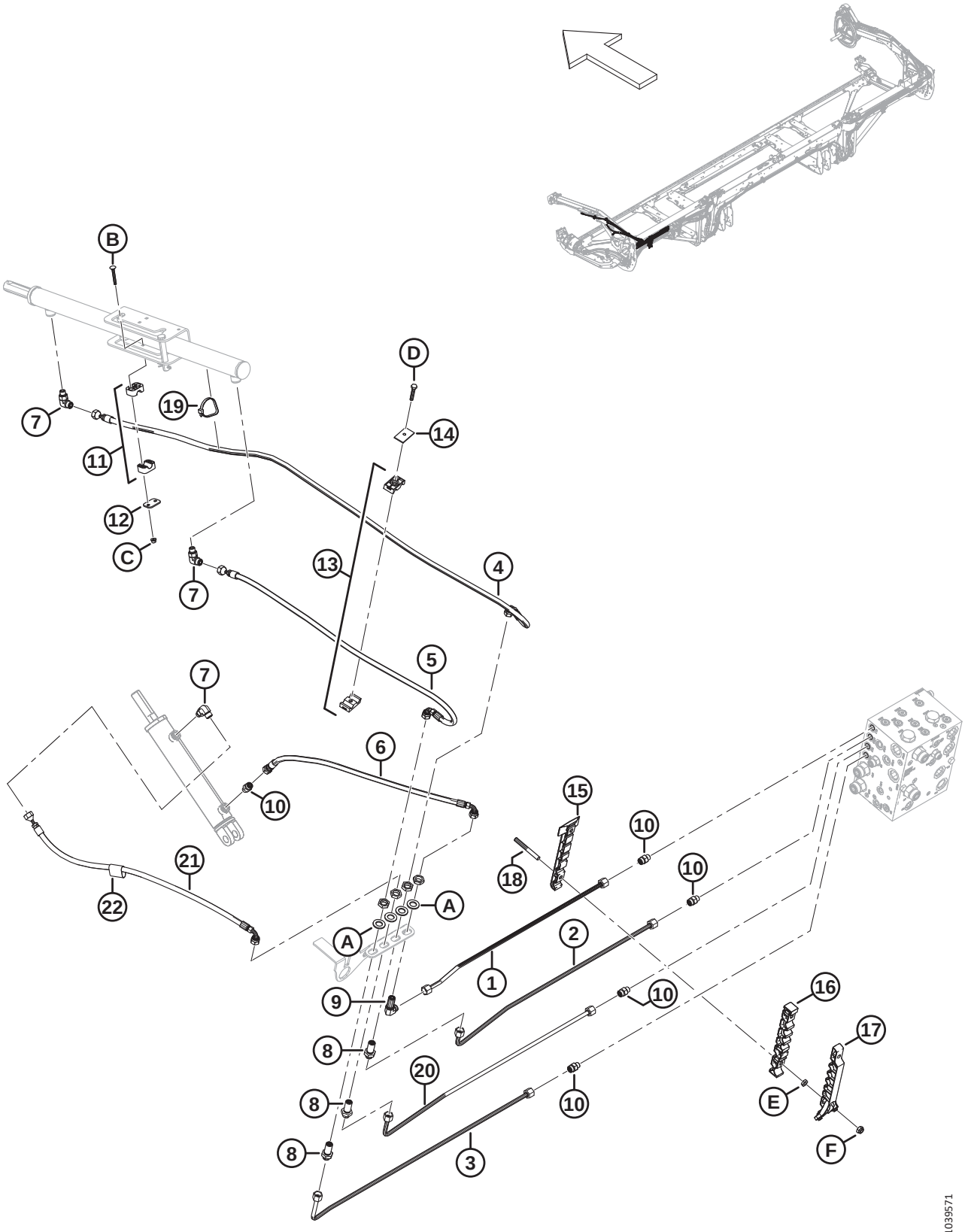

Ref	Part Number	Description	Qty	Serial Number
1	283249	LINE – HYDRAULIC (FD225)	1	
2	283248	LINE – HYDRAULIC (FD225)	1	
3	283246	LINE – HYDRAULIC (FD225)	1	
4	283057	HOSE – HYD	1	
5	283058	HOSE – HYD	1	
6	283059	HOSE – HYD	1	
7	136095	FITTING – ELBOW 90° HYD	3	
8	136145	FITTING – BULKHEAD UNION HYD [297]	3	
9	136150	FITTING – ELBOW 90° BLKHD HYD [297]	1	
10	135778	FITTING – ADAPTER	5	
11	283791	CLAMP – ASSY [298]	1	
12	255461	PLATE – COVER	1	
13	232395	CLAMP – ASSY [298]	1	
14	184303	CLAMP – COVER PLATE	1	
15	283797	CLAMP – LINE BOTTOM LH	1	
16	283807	CLAMP – LINE MIDDLE LH	1	
17	311233	CLAMP – LINE TOP LH	1	
18	312654	STUD – THRD CLAMP PATCH WING	2	
19	30753	FASTENER – CABLE TIE, BLACK	1	
20	283247	LINE – HYDRAULIC (FD225)	1	
21	283060	HOSE – HYD	1	
22	135443	CINCH STRAP – 4 IN. LG	1	
A	136540	WASHER – FLAT		
B	184644	BOLT – RHSN M6 X 1 X 50-8.8-ZINC		
C	152668	NUT – HEX FLG CTR LOC M6 X 1-8		
D	30660	BOLT – HEX HD M8 X 1.25 X 45-8.8-AA1J		
E	136442	NUT – HEX THIN M10 X 1.5-05-AA1J		
F	184692	NUT – HEX NYLOC M10 X 1.5-8-AA1J		

297. The fitting includes a securing nut (NSS).
298. The clamp assembly includes two clamp halves (NSS). It does NOT include the cover plate or hardware.

79 Hydraulics – Lift and Fore-Aft, Single Reel, Right Arm (FD225)

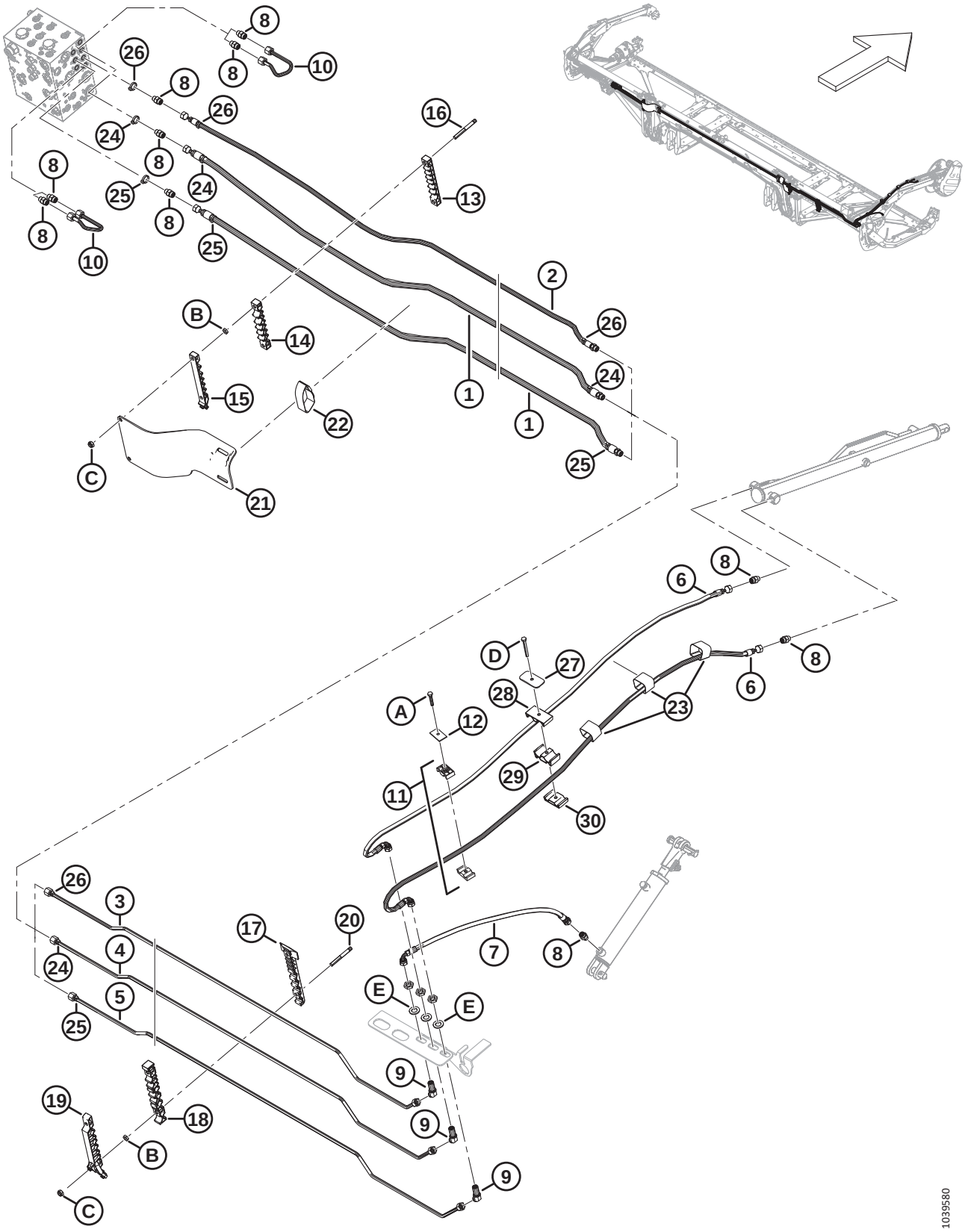

Ref	Part Number	Description	Qty	Serial Number
1	283096	HOSE – HYD	2	
	135865	O-RING Ø1.78 X Ø9.25		
2	323356	HOSE – HYD	1	
3	323343	LINE – HYDRAULIC (FD225)	1	
4	323344	LINE – HYDRAULIC (FD225)	1	
5	323345	LINE – HYDRAULIC (FD225)	1	
6	283327	HOSE – HYD	2	
7	283059	HOSE – HYD	1	
8	135778	FITTING – ADAPTER	10	
9	136146	FITTING – ELBOW 45° BLKHD HYD [299]	3	
10	283251	LINE – HYDRAULIC	2	
11	232395	CLAMP – ASSY [300]	1	
12	184303	CLAMP – COVER PLATE	1	
13	283909	CLAMP – LINE TOP FLEX LH	1	
	283906	CLAMP – LINE TOP FLEX RH	1	
14	283910	CLAMP – LINE MIDDLE FLEX LH	1	
	283907	CLAMP – LINE MIDDLE FLEX RH	1	
15	311461	CLAMP – LINE TOP FLEX LH	1	
	311462	CLAMP – LINE TOP FLEX RH	1	
16	312655	STUD – THRD CLAMP PATCH BLACK	2	
17	283820	CLAMP – LINE BOTTOM RH	1	
18	283818	CLAMP – LINE MIDDLE RH	1	
19	311451	CLAMP – LINE TOP RH	1	
20	312654	STUD – THRD CLAMP PATCH WING	4	
21	311354	SHIELD – HOSE TRANSITION LH	1	
	311360	SHIELD – HOSE TRANSITION RH	1	
22	170851	CINCH STRAP – 10 IN. LG	2	
23	135444	CINCH STRAP – 4 IN. LG	3	
24	40704	CABLE TIE – ORANGE	4	
25	40702	CABLE TIE – RED	4	
26	21763	CABLE TIE – BLACK	4	
27	323023	PLATE – CLAMP CENTER REEL ARM	1	
28	283989	PLATE – HOSE REEL TOP	1	
29	283988	PLATE – HOSE REEL MIDDLE	1	
30	283987	PLATE – HOSE REEL BOTTOM	1	
A	30660	BOLT – HEX HD M8 X 1.25 X 45-8.8-AA1J		
B	136442	NUT – HEX THIN M10 X 1.5-05-AA1J		
C	184692	NUT – HEX NYLOC M10 X 1.5-8-AA1J		
D	184656	BOLT – HEX HD M8 X 1.25 X 70-8.8-AA1J		
E	136540	WASHER – FLAT		

299. The fitting includes a securing nut (NSS).
300. The clamp assembly includes two clamp halves (NSS). It does NOT include the cover plate or hardware.

80 Hydraulics – Lift and Fore-Aft, Double Reel, Left Arm (FD230, FD235, FD240, and FD241)

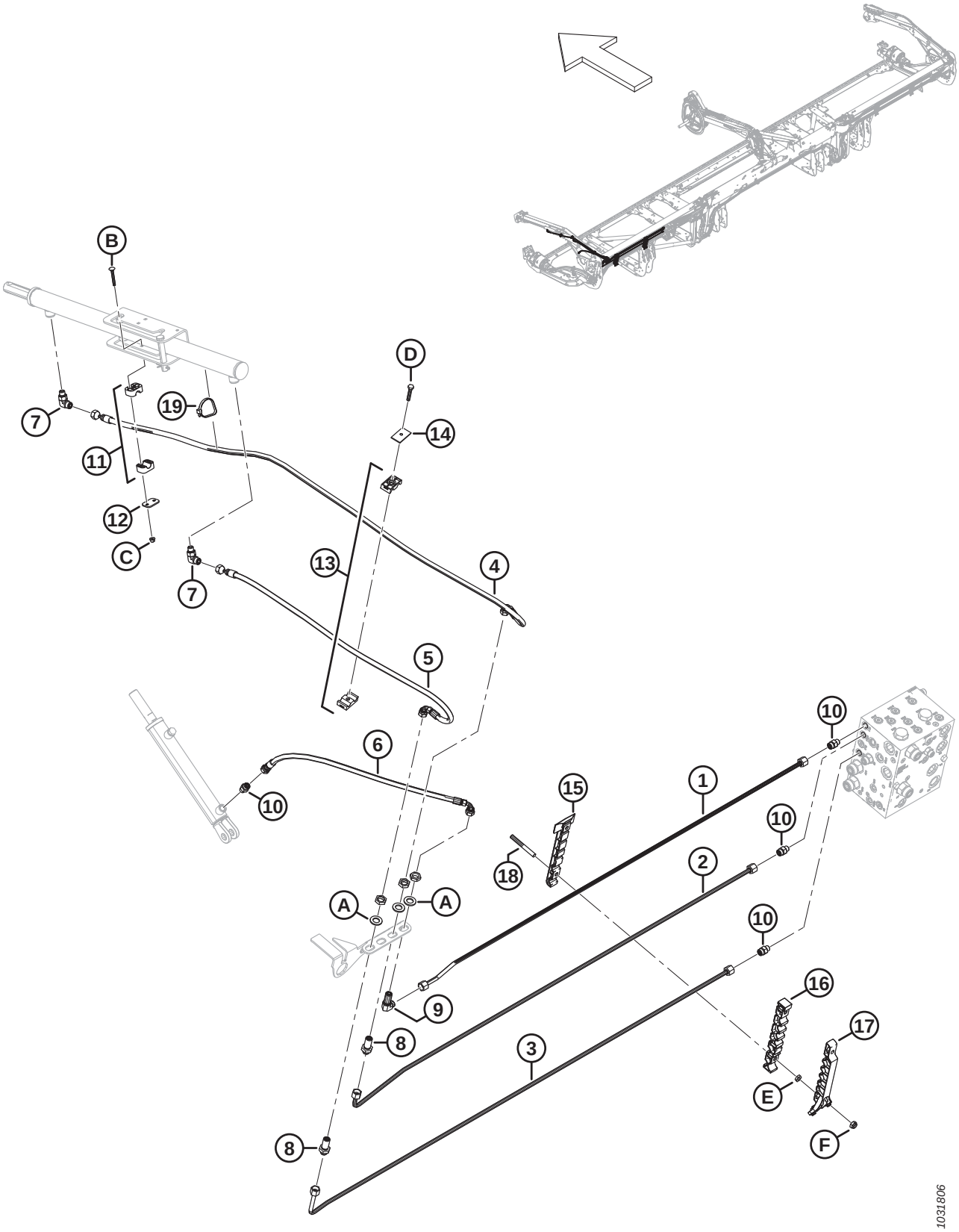

Ref	Part Number	Description	Qty	Serial Number
1	283056	LINE – HYDRAULIC (FD230) [301]	1	
	283144	LINE – HYDRAULIC (FD235) [302]	1	
	283420	LINE – HYDRAULIC (FD240) [303]	1	
	283183	LINE – HYDRAULIC (FD241) [304]	1	
2	283055	LINE – HYDRAULIC (FD230) [305]	1	
	283143	LINE – HYDRAULIC (FD235) [306]	1	
	283419	LINE – HYDRAULIC (FD240) [307]	1	
	283182	LINE – HYDRAULIC (FD241) [308]	1	
3	283053	LINE – HYDRAULIC (FD230) [305]	1	
	283141	LINE – HYDRAULIC (FD235) [306]	1	
	283417	LINE – HYDRAULIC (FD240) [307]	1	
	283180	LINE – HYDRAULIC (FD241) [308]	1	
4	283057	HOSE – HYD (FD230–FD241)	1	
5	283058	HOSE – HYD (FD230–FD241)	1	
6	283059	HOSE – HYD (FD230–FD241)	1	
7	136095	FITTING – ELBOW 90° HYD	2	
8	136145	FITTING – BULKHEAD UNION HYD [309]	2	
9	136150	FITTING – ELBOW 90° BLKHD HYD [309]	1	
10	135778	FITTING – ADAPTER	4	
11	283791	CLAMP – ASSY [310]	1	
12	255461	PLATE – COVER	1	
13	232395	CLAMP – ASSY [310]	1	
14	184303	CLAMP – COVER PLATE	1	
15	283797	CLAMP – LINE BOTTOM LH [311]		
16	283807	CLAMP – LINE MIDDLE LH [311]		
17	311233	CLAMP – LINE TOP LH [311]		
18	312654	STUD – THRD CLAMP PATCH WING [312]		
19	30753	FASTENER – CABLE TIE, BLACK	1	
A	136540	WASHER – FLAT		
B	184644	BOLT – RHSN M6 X 1 X 50-8.8-ZINC		
C	152668	NUT – HEX FLG CTR LOC M6 X 1-8		
D	30660	BOLT – HEX HD M8 X 1.25 X 45-8.8-AA1J		

301. Used for FD230 headers.
302. Used for FD235 headers.
303. Used for FD240 headers.
304. Used for FD241 headers.
305. Used for FD230 headers.
306. Used for FD235 headers.
307. Used for FD240 headers.
308. Used for FD241 headers.
309. The fitting includes a securing nut (NSS).
310. The clamp assembly includes two clamp halves (NSS). It does NOT include the cover plate or hardware.
311. Quantities: FD230 = 2, FD235 = 3, FD240 = 4, and FD241 = 4.
312. Quantities: FD230 = 4, FD235 = 6, FD240 = 8, and FD241 = 8.

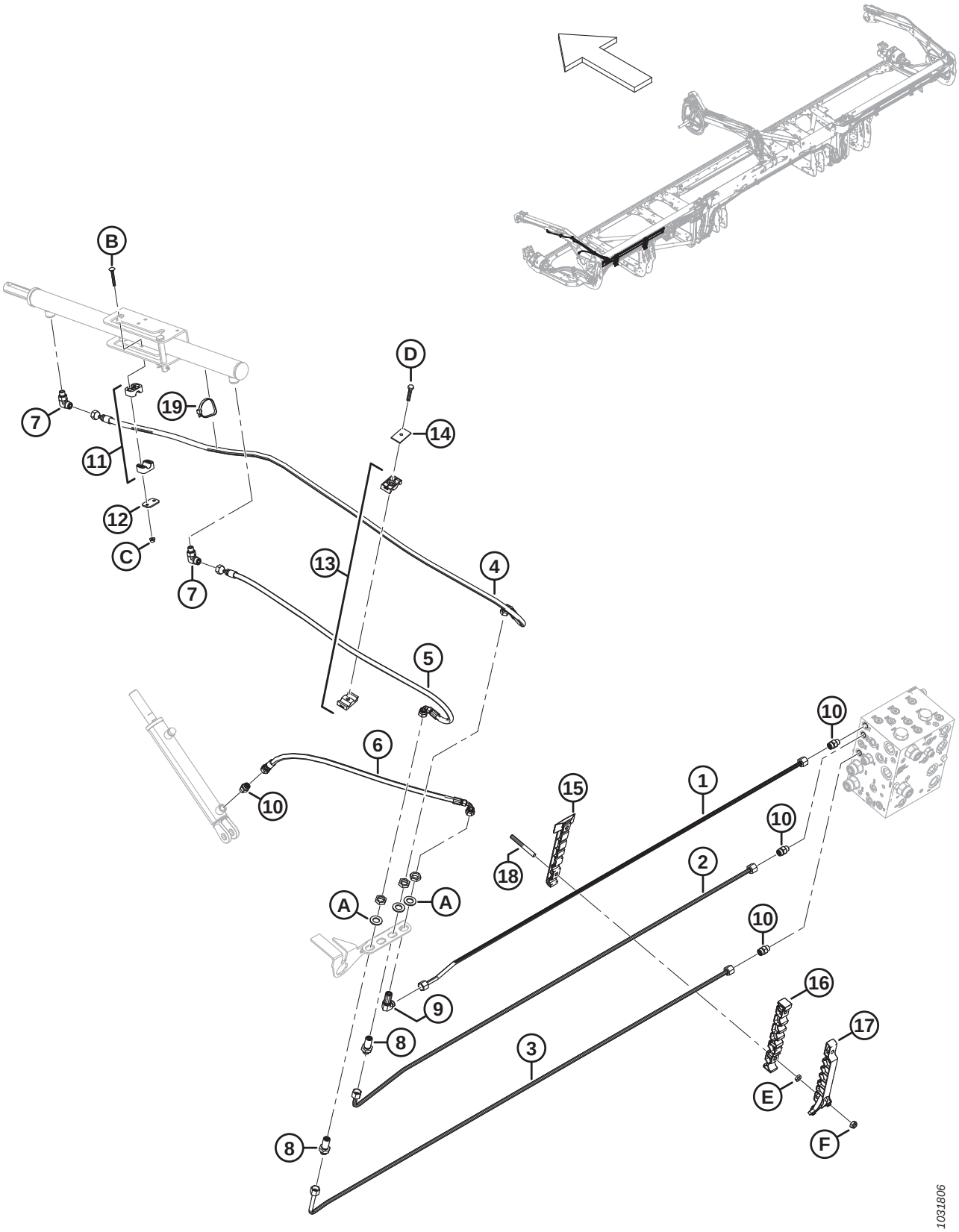
B
D
7
19
14
11
12
C
13
4
7
5
6
10
10
15
1
10
18
2
A
A
10
9
16
8
3
17
E
8
F
1031806

Ref	Part Number	Description	Qty	Serial Number
E	136442	NUT – HEX THIN M10 X 1.5-05-AA1J		
F	184692	NUT – HEX NYLOC M10 X 1.5-8-AA1J		

81 Hydraulics – Lift and Fore-Aft, Double Reel, Center Arm (FD230, FD235, FD240, and FD241)

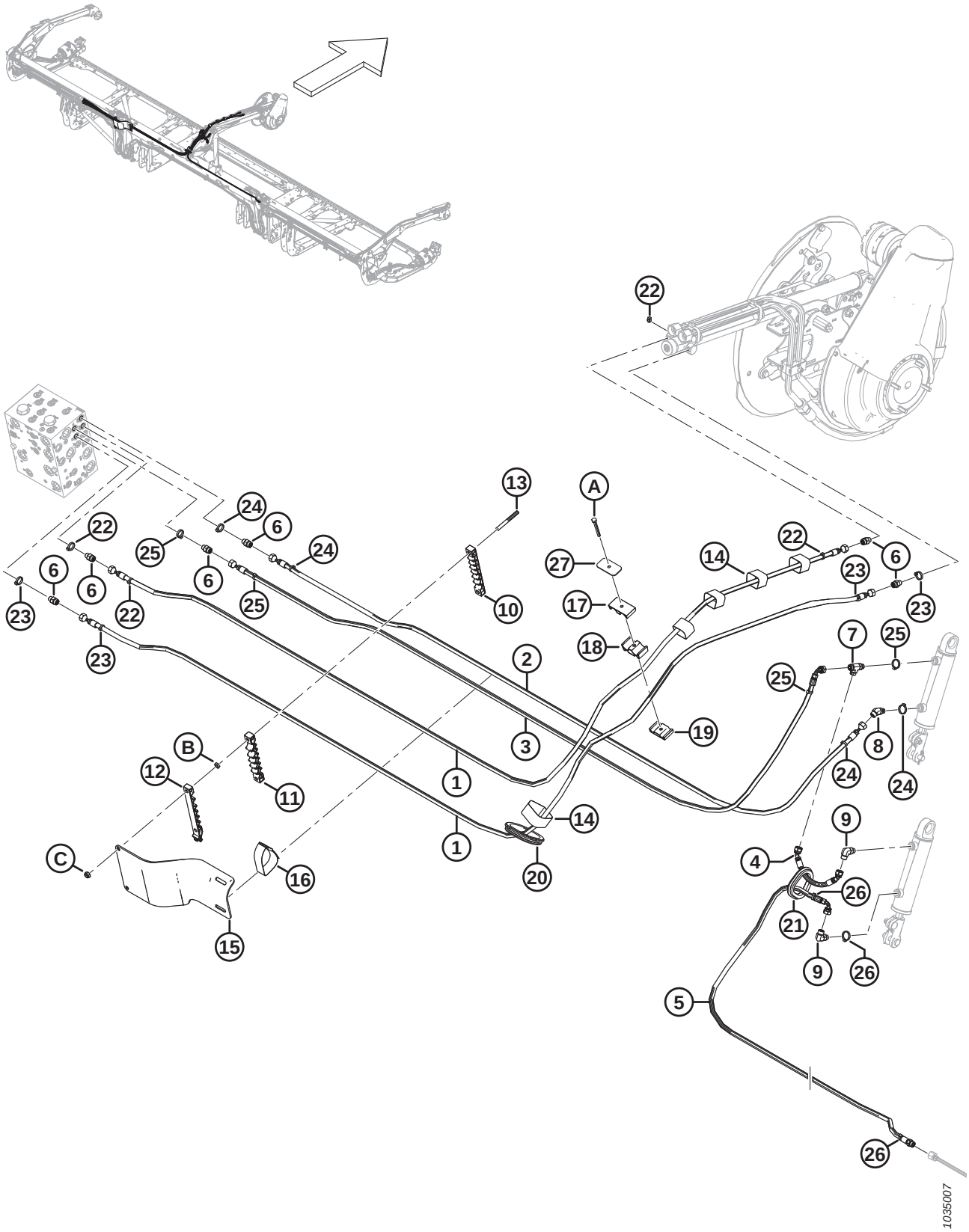

Ref	Part Number	Description	Qty	Serial Number
1	323660	HOSE – HYD, 1/4 IN ID, 4230 MM LG, 100R17	2	
2	323659	HOSE – HYD, 1/4 IN ID, 3060 MM LG, 100R17	1	
3	323661	HOSE – HYD, 1/4 IN ID, 3215 MM LG, 100R17	1	
4	283785	HOSE – HYD, 1/4 IN ID, 240 MM LG, 100R17	1	
5	323663	HOSE – HYD, 1/4 IN ID, 2750 MM LG, 100R17	1	
	135865	O-RING – Ø1.78 X Ø9.25		
6	135778	FITTING – ADAPTER	6	
7	136240	FITTING – TEE HYD	1	
8	136144	FITTING – ELBOW 45° HYD	1	
9	136095	FITTING – ELBOW 90° HYD	2	
10	283909	CLAMP – LINE BOTTOM FLEX LH	1	
11	283910	CLAMP – LINE MIDDLE FLEX LH	1	
12	311461	CLAMP – LINE TOP FLEX LH	1	
13	312655	STUD – THRD CLAMP PATCH BLACK	2	
14	135444	CINCH STRAP – 6 IN. LG	5	
15	311354	SHIELD – HOSE TRANSITION LH	1	
16	295929	CINCH STRAP – 12 IN. LG	1	
17	283989	CLAMP – HOSE REEL TOP	1	
18	283988	CLAMP – HOSE REEL MIDDLE	1	
19	283987	CLAMP – HOSE REEL BOTTOM	1	
20	125377	GROMMET – 91 MM I.D.	1	
21	283889	GROMMET – RUBBER	1	
22	40704	FASTENER – CABLE TIE, ORANGE	4	
23	40702	FASTENER – CABLE TIE, RED	4	
24	252795	FASTENER – CABLE TIE, PINK	4	
25	21763	FASTENER – CABLE TIE, BLACK	4	
26	252794	FASTENER – CABLE TIE, PURPLE	3	
27	323023	PLATE – CLAMP CENTER REEL ARM	1	
A	184656	BOLT – HEX HD M8 X 1.25 X 70-8.8-AA1J		
B	136442	NUT – HEX THIN M10 X 1.5-05-AA1J		
C	184692	NUT – HEX NYLOC M10 X 1.5-8-AA1J		

82 Hydraulics – Lift and Fore-Aft, Double Reel, Right Arm (FD230 and FD235)

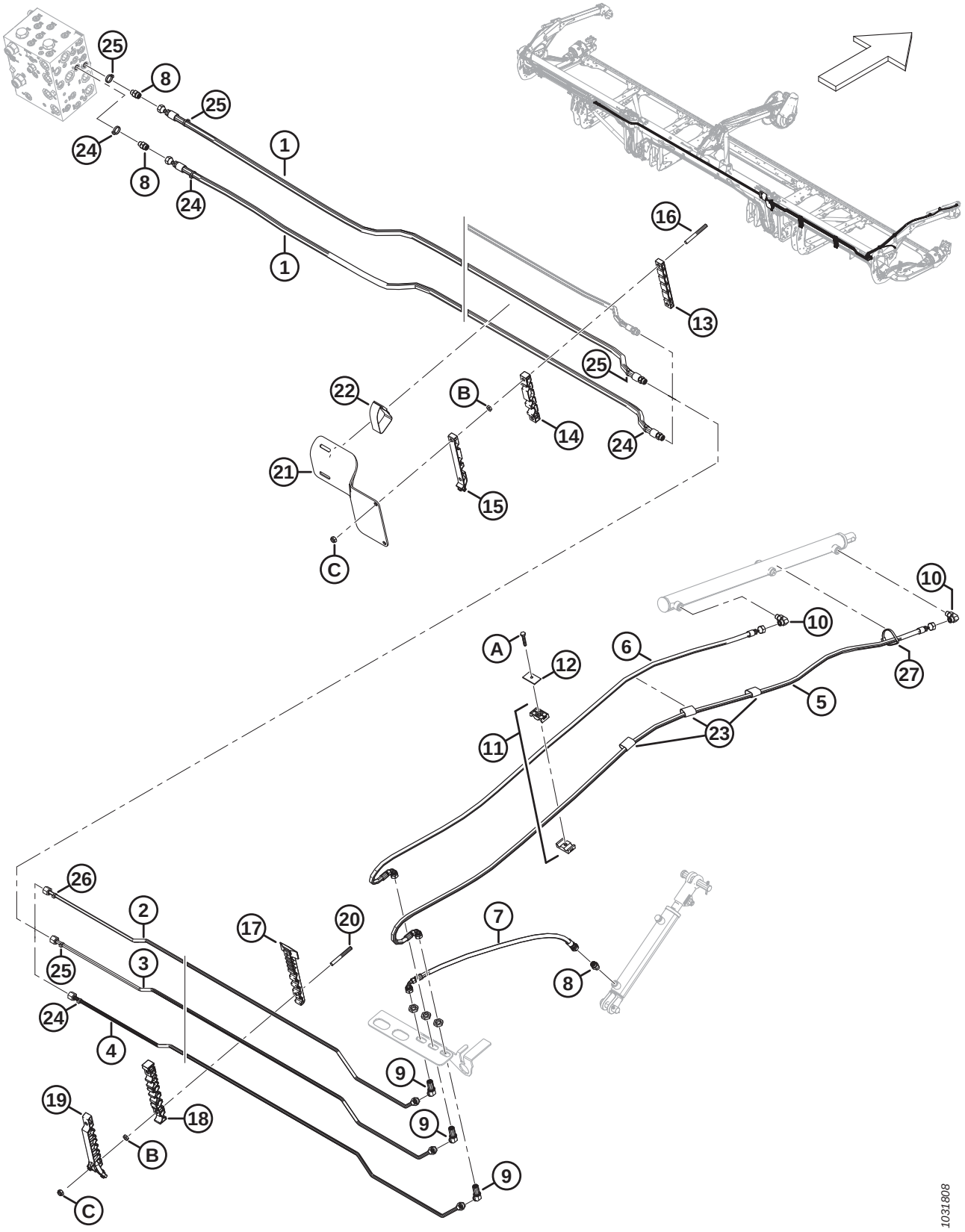

Ref	Part Number	Description	Qty	Serial Number
1	283096	HOSE – HYD	2	
	135865	O-RING – Ø1.78 X Ø9.25		
2	283078	LINE – HYDRAULIC (FD230) [313]	1	
	283145	LINE – HYDRAULIC (FD235) [314]	1	
3	283079	LINE – HYDRAULIC (FD230) [315]	1	
	283146	LINE – HYDRAULIC (FD235) [316]	1	
4	283080	LINE – HYDRAULIC (FD230) [315]	1	
	283147	LINE – HYDRAULIC (FD235) [316]	1	
5	283074	HOSE – HYD	1	
6	283075	HOSE – HYD	1	
7	283059	HOSE – HYD	1	
8	135778	FITTING – ADAPTER	3	
9	136146	FITTING – ELBOW 45° BLKHD HYD [317]	3	
10	136095	FITTING – ELBOW 90° HYD	2	
11	232395	CLAMP – ASSY [318]	2	
12	184303	CLAMP – COVER PLATE	2	
13	283906	CLAMP – LINE TOP FLEX RH	1	
14	283907	CLAMP – LINE MIDDLE FLEX RH	1	
15	311462	CLAMP – LINE TOP FLEX RH	1	
16	312655	STUD – THRD CLAMP PATCH BLACK	2	
17	283820	CLAMP – LINE BOTTOM RH [319]		
18	283818	CLAMP – LINE MIDDLE RH [319]		
19	311451	CLAMP – LINE TOP RH [319]		
20	312654	STUD – THRD CLAMP PATCH WING [320]		
21	311360	SHIELD – HOSE TRANSITION RH	1	
22	170851	CINCH STRAP – 10 IN. LG	1	
23	135443	CINCH STRAP – 4 IN. LG	3	
24	49227	FASTENER – CABLE TIE, GREEN	4	
25	135266	FASTENER – CABLE TIE, LIGHT BLUE	4	
26	252794	FASTENER – CABLE TIE, PURPLE	1	
27	30753	FASTENER – CABLE TIE, BLACK	1	
A	30660	BOLT – HEX HD M8 X 1.25 X 45-8.8-AA1J		
B	136442	NUT – HEX THIN M10 X 1.5-05-AA1J		
C	184692	NUT – HEX NYLOC M10 X 1.5-8-AA1J		

313. Used for FD230 headers.
314. Used for FD235 headers.
315. Used for FD230 headers.
316. Used for FD235 headers.
317. The fitting includes a securing nut (NSS).
318. The clamp assembly includes two clamp halves (NSS). It does NOT include the cover plate or hardware.
319. Quantities: FD230 = 2, FD235 = 3.
320. Quantities: FD230 = 4, FD235 = 6.

83 Hydraulics – Lift and Fore-Aft, Double Reel, Right Arm (FD240 and FD241)

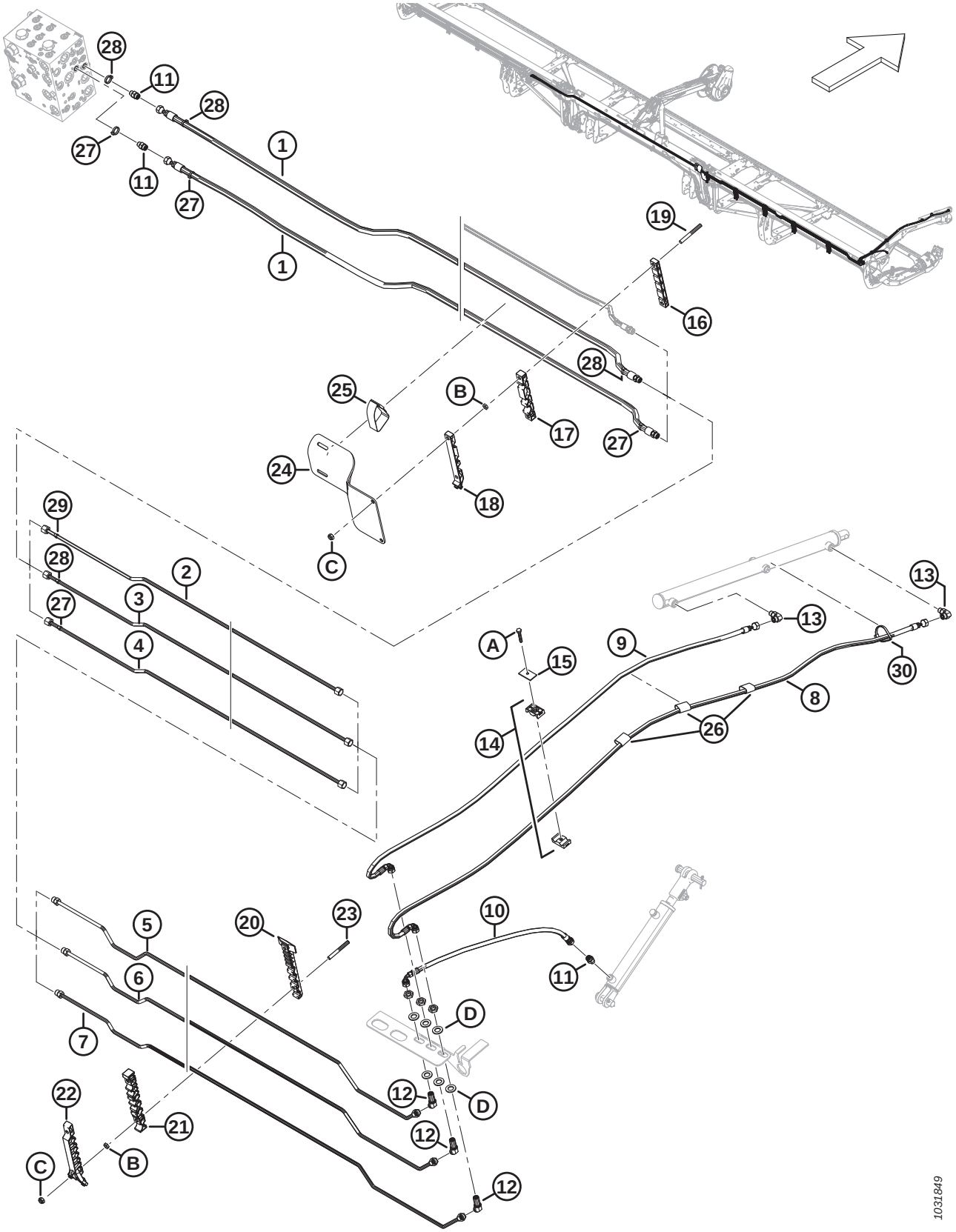

Ref	Part Number	Description	Qty	Serial Number
1	283096	HOSE – HYD	2	
	135865	O-RING – Ø1.78 X Ø9.25		
2	283428	LINE – HYDRAULIC (FD240) [321]	1	
	283184	LINE – HYDRAULIC (FD241) [322]	1	
3	283429	LINE – HYDRAULIC (FD240) [323]	1	
	283185	LINE – HYDRAULIC (FD241) [324]	1	
4	283430	LINE – HYDRAULIC (FD240) [323]	1	
	283186	LINE – HYDRAULIC (FD241) [324]	1	
5	283431	LINE – HYDRAULIC	1	
	135865	O-RING – Ø1.78 X Ø9.25		
6	283432	LINE – HYDRAULIC	1	
	135865	O-RING – Ø1.78 X Ø9.25		
7	283433	LINE – HYDRAULIC	1	
	135865	O-RING – Ø1.78 X Ø9.25		
8	283074	HOSE – HYD	1	
9	283075	HOSE – HYD	1	
10	283059	HOSE – HYD	1	
11	135778	FITTING – ADAPTER	3	
12	136146	FITTING – ELBOW 45° BLKHD HYD [325]	3	
13	136095	FITTING – ELBOW 90° HYD	2	
14	232395	CLAMP – ASSY [326]	2	
15	184303	CLAMP – COVER PLATE	2	
16	283906	CLAMP – LINE TOP FLEX RH	1	
17	283907	CLAMP – LINE MIDDLE FLEX RH	1	
18	311462	CLAMP – LINE TOP FLEX RH	1	
19	312655	STUD – THRD CLAMP PATCH BLACK	2	
20	283820	CLAMP – LINE BOTTOM RH [327]		
21	283818	CLAMP – LINE MIDDLE RH [327]		
22	311451	CLAMP – LINE TOP RH [327]		
23	312654	STUD – THRD CLAMP PATCH WING [328]		
24	311360	SHIELD – HOSE TRANSITION RH	1	
25	170851	CINCH STRAP – 10 IN. LG	1	
26	135443	CINCH STRAP – 4 IN. LG	3	
27	49227	FASTENER – CABLE TIE, GREEN	4	
28	135266	FASTENER – CABLE TIE, LIGHT BLUE	4	
29	252794	FASTENER – CABLE TIE, PURPLE	1	
30	30753	FASTENER – CABLE TIE, BLACK	1	

321. Used for FD240 headers.
322. Used for FD241 headers.
323. Used for FD240 headers.
324. Used for FD241 headers.
325. The fitting includes a securing nut (NSS).
326. The clamp assembly includes two clamp halves (NSS). It does NOT include the cover plate or hardware.
327. Quantities: FD240 = 4, FD241 = 4.
328. Quantities: FD240 = 8, FD241 = 8.

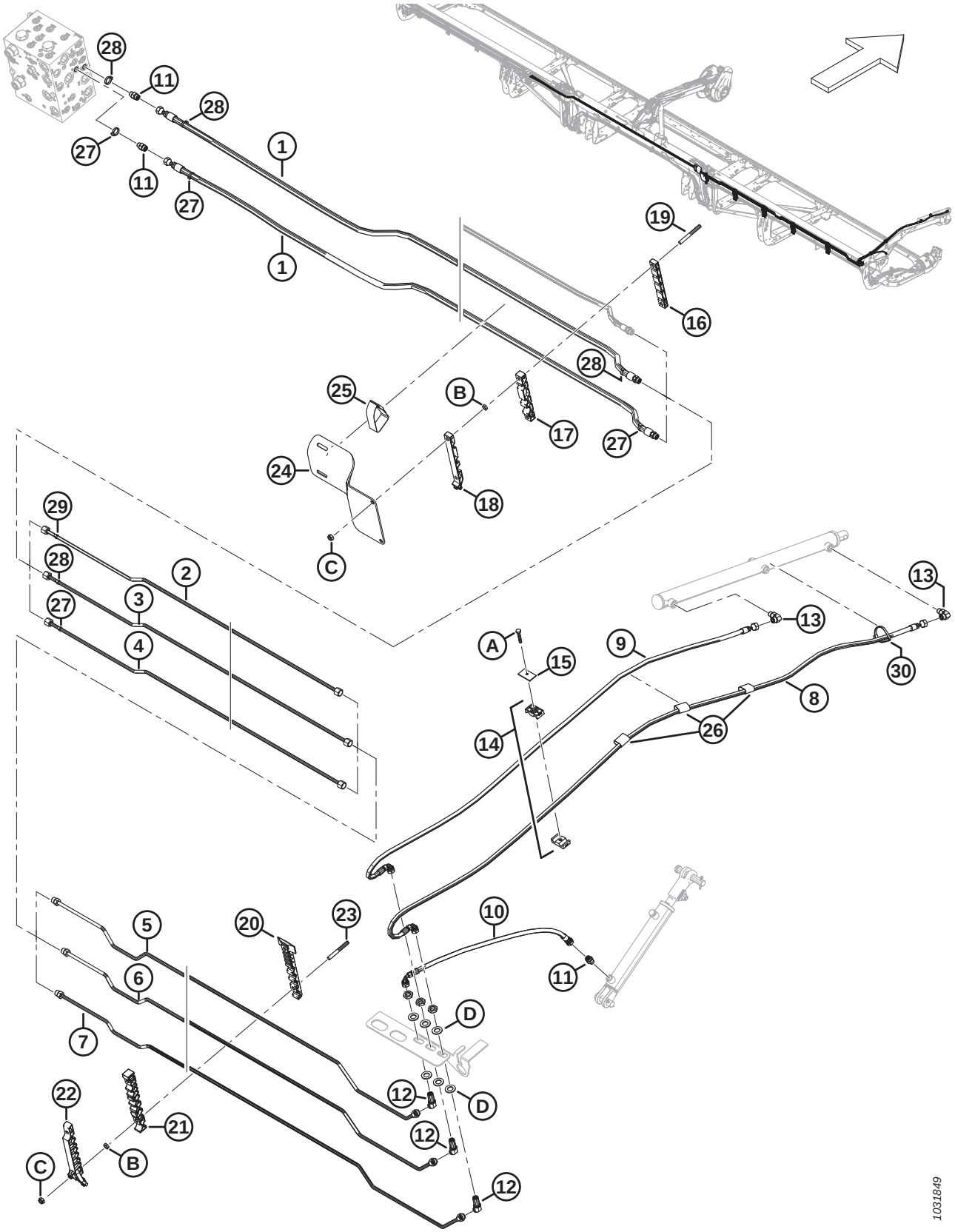
28
11
28
27
11
27
1
1
19
16
28
25
B
17
27
24
18
C
29
28
27
2
3
4
A
15
9
13
13
30
8
26
14
5
6
7
20
23
10
11
D
D
12
12
12
22
21
C
B
1031849

Ref	Part Number	Description	Qty	Serial Number
A	30660	BOLT – HEX HD M8 X 1.25 X 45-8.8-AA1J		
B	136442	NUT – HEX THIN M10 X 1.5-05-AA1J		
C	184692	NUT – HEX NYLOC M10 X 1.5-8-AA1J		
D	136540	WASHER – FLAT		

84 Hydraulics – Lift and Fore-Aft, Triple Reel, Left Arm (FD240, FD245, and FD250)

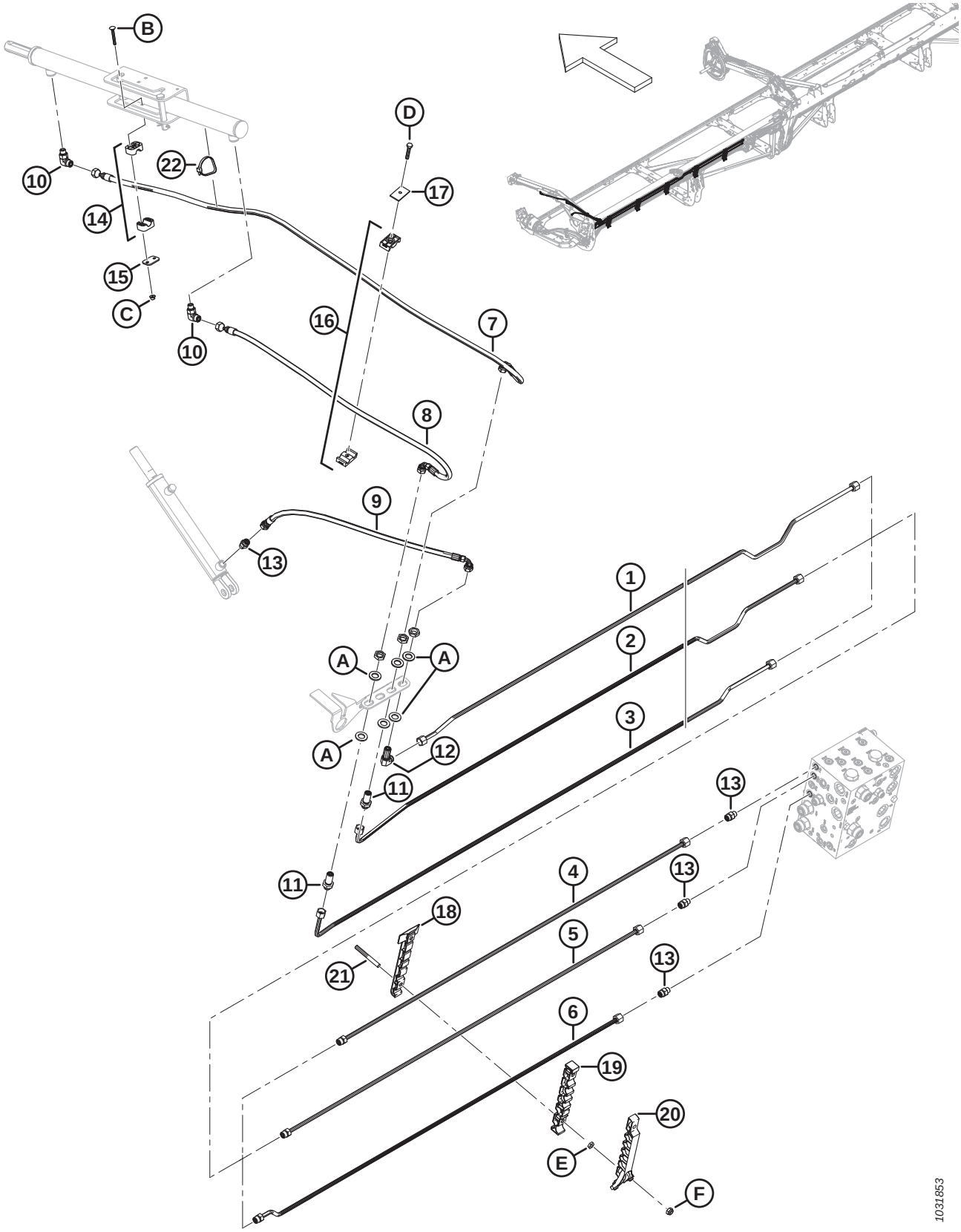

Ref	Part Number	Description	Qty	Serial Number
1	283420	LINE – HYDRAULIC (FD240 AND FD245) [329]	1	
	283824	LINE – HYDRAULIC (FD250) [330]	1	
2	283419	LINE – HYDRAULIC (FD240 AND FD245) [331]	1	
	283823	LINE – HYDRAULIC (FD250) [332]	1	
3	283417	LINE – HYDRAULIC (FD240 AND FD245) [331]	1	
	283822	LINE – HYDRAULIC (FD250) [332]	1	
4	283450	LINE – HYDRAULIC (FD250) [332]	1	
	135865	O-RING – Ø1.78 X Ø9.25		
5	283449	LINE – HYDRAULIC (FD250) [332]	1	
	135865	O-RING – Ø1.78 X Ø9.25		
6	283447	LINE – HYDRAULIC (FD250) [332]	1	
	135865	O-RING – Ø1.78 X Ø9.25		
7	283057	HOSE – HYD	1	
8	283058	HOSE – HYD	1	
9	283059	HOSE – HYD	1	
10	136095	FITTING – ELBOW 90° HYD	2	
11	136145	FITTING – BULKHEAD UNION HYD [333]	2	
12	136150	FITTING – ELBOW 90° BLKHD HYD [333]	1	
13	135778	FITTING – ADAPTER	4	
14	283791	CLAMP – ASSY [334]	1	
15	255461	PLATE – COVER	1	
16	232395	CLAMP – ASSY [334]	1	
17	184303	CLAMP – COVER PLATE	1	
18	283797	CLAMP – LINE BOTTOM LH	5	
19	283807	CLAMP – LINE MIDDLE LH	5	
20	311233	CLAMP – LINE TOP LH	5	
21	312654	STUD – THRD CLAMP PATCH WING	10	
22	30753	FASTENER – CABLE TIE, BLACK	1	
A	136540	WASHER – FLAT		
B	184644	BOLT – RHSN M6 X 1 X 50-8.8-ZINC		
C	152668	NUT – HEX FLG CTR LOC M6 X 1-8		
D	30660	BOLT – HEX HD M8 X 1.25 X 45-8.8-AA1J		
E	136442	NUT – HEX THIN M10 X 1.5-05-AA1J		
F	184692	NUT – HEX NYLOC M10 X 1.5-8-AA1J		

329. Used for FD240 and FD245 headers.
330. Used for FD250 headers.
331. Used for FD240 and FD245 headers.
332. Used for FD250 headers.
333. The fitting includes a securing nut (NSS).
334. The clamp assembly includes two clamp halves (NSS). It does NOT include the cover plate or hardware.

85 Hydraulics – Lift and Fore-Aft, Triple Reel, Center Arm, Left Side (FD240, FD245, and FD250)

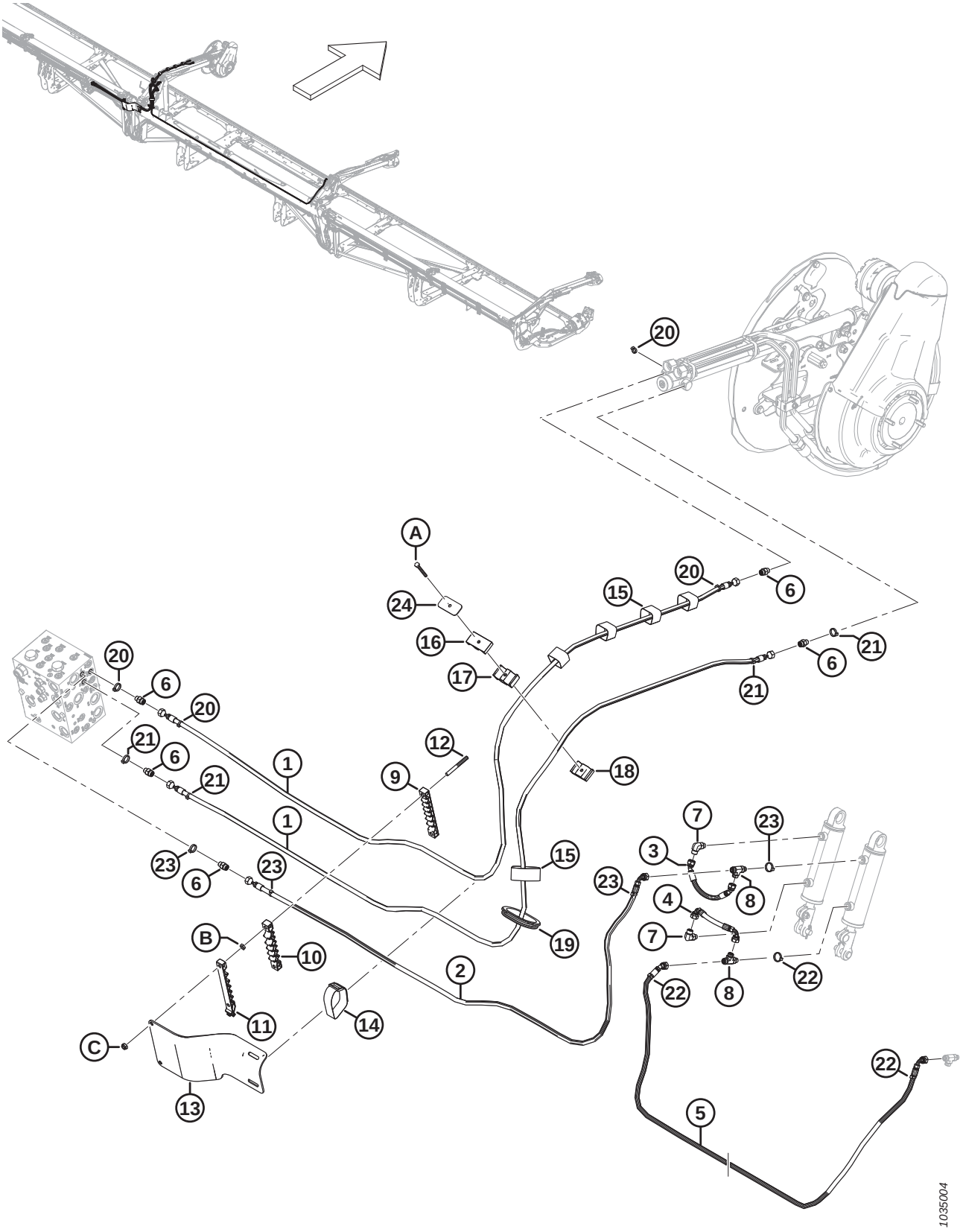

Ref	Part Number	Description	Qty	Serial Number
1	323665	HOSE – HYD	2	
2	323666	HOSE – HYD	1	
3	283785	HOSE – HYD	1	
4	283786	HOSE – HYD	1	
5	323670	HOSE – HYD (FD240) [335]	1	
	323673	HOSE – HYD (FD245 AND FD250) [336]	1	
6	135778	FITTING – ADAPTER	5	
7	136095	FITTING – ELBOW 90° HYD	2	
8	136240	FITTING – TEE HYD	2	
9	283909	CLAMP – LINE BOTTOM FLEX LH	1	
10	283910	CLAMP – LINE MIDDLE FLEX LH	1	
11	311461	CLAMP – LINE TOP FLEX LH	1	
12	312655	STUD – THRD CLAMP PATCH BLACK	2	
13	311354	SHIELD – HOSE TRANSITION LH	1	
14	295929	CINCH STRAP – 12 IN. LG	1	
15	135444	CINCH STRAP – 6 IN. LG	5	
16	283989	CLAMP – HOSE REEL TOP	1	
17	283988	CLAMP – HOSE REEL MIDDLE	1	
18	283987	CLAMP – HOSE REEL BOTTOM	1	
19	125377	GROMMET – 91 MM I.D.	1	
20	40704	FASTENER – CABLE TIE, ORANGE	4	
21	40702	FASTENER – CABLE TIE, RED	4	
22	40703	FASTENER – CABLE TIE, BLUE	3	
23	21763	FASTENER – CABLE TIE, BLACK	4	
24	323023	PLATE – CLAMP CENTER REEL ARM	1	
A	184656	BOLT – HEX HD M8 X 1.25 X 70-8.8-AA1J		
B	136442	NUT – HEX THIN M10 X 1.5-05-AA1J		
C	184692	NUT – HEX NYLOC M10 X 1.5-8-AA1J		

335. Used for FD240 headers only.
336. Used for FD245 and FD250 headers only.

86 Hydraulics – Lift and Fore-Aft, Triple Reel, Center Arm, Right Side (FD240, FD245, and FD250)

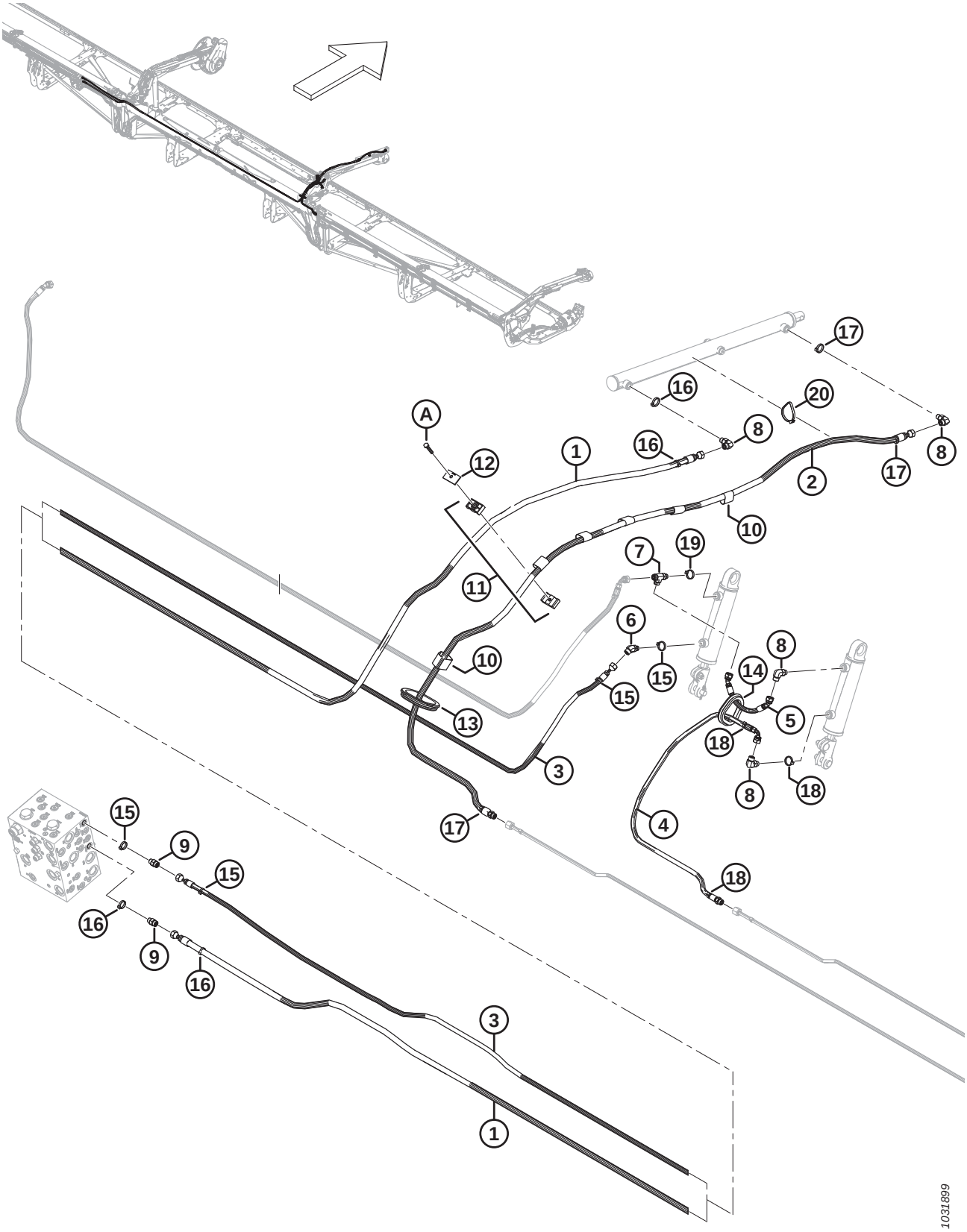

Ref	Part Number	Description	Qty	Serial Number
1	323671	HOSE – HYD (FD240) [337]	1	
	323674	HOSE – HYD (FD245 AND FD250) [338]	1	
2	323669	HOSE – HYD	1	
	135865	O-RING – Ø1.78 X Ø9.25		
3	323664	HOSE – HYD (FD240) [339]	1	
	323672	HOSE – HYD (FD245 AND FD250) [340]	1	
4	323668	HOSE – HYD	1	
	135865	O-RING – Ø1.78 X Ø9.25		
5	283785	HOSE – HYD	1	
6	136144	FITTING – ELBOW 45° HYD	1	
7	136240	FITTING – TEE HYD	1	
8	136095	FITTING – ELBOW 90° HYD	4	
9	135778	FITTING – ADAPTER	2	
10	135443	CINCH STRAP – 4 IN. LG	6	
11	232395	CLAMP – ASSY [341]	1	
12	184303	PLATE – COVER	1	
13	125377	GROMMET – 91 MM I.D.	1	
14	283889	GROMMET – RUBBER	1	
15	252795	FASTENER – CABLE TIE, PINK	4	
16	135226	FASTENER – CABLE TIE, LIGHT BLUE	4	
17	40701	FASTENER – CABLE TIE, YELLOW	3	
18	252794	FASTENER – CABLE TIE, PURPLE	3	
19	40703	FASTENER – CABLE TIE, BLUE	1	
20	30753	FASTENER – CABLE TIE, BLACK	1	
A	30660	BOLT – HEX HD M8 X 1.25 X 45-8.8-AA1J		

337. Used for FD240 headers.
338. Used for FD245 and FD250 headers.
339. Used for FD240 headers.
340. Used for FD245 and FD250 headers.
341. The clamp assembly includes two clamp halves (NSS). It does NOT include the cover plate or hardware.

87 Hydraulics – Lift and Fore-Aft, Triple Reel, Right Arm (FD240, FD245, and FD250)

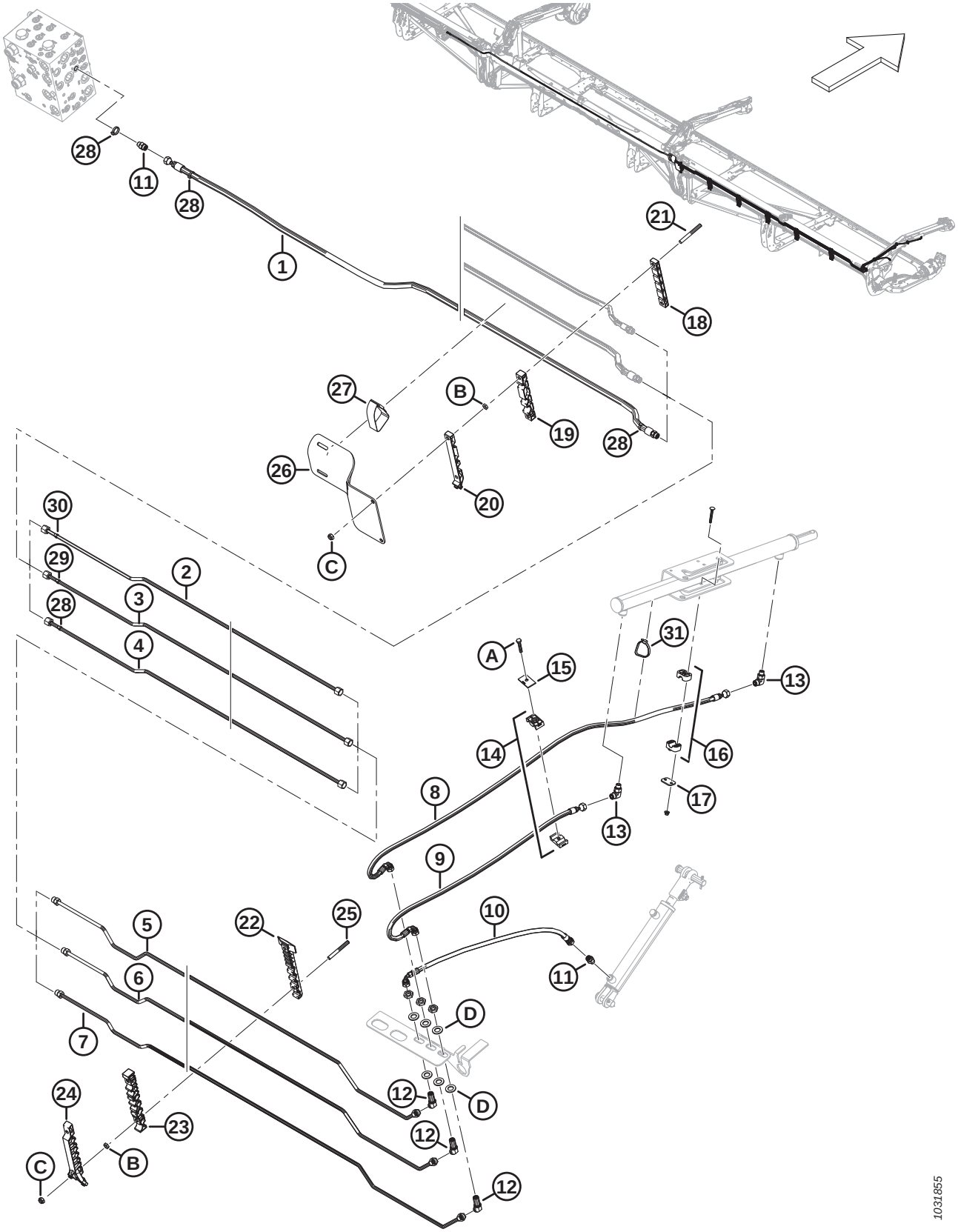

Ref	Part Number	Description	Qty	Serial Number
1	283096	HOSE – HYD (FD240) [342]	1	
	283507	HOSE – HYD (FD245 AND FD250) [343]	1	
	135865	O-RING – Ø1.78 X Ø9.25		
2	283428	LINE – HYDRAULIC (FD245 AND FD250) [344]	1	
	283451	LINE – HYDRAULIC (FD250) [345]	1	
3	283429	LINE – HYDRAULIC (FD245 AND FD250) [344]	1	
	283452	LINE – HYDRAULIC (FD250) [346]	1	
4	283430	LINE – HYDRAULIC (FD245 AND FD250) [344]	1	
	283453	LINE – HYDRAULIC (FD250) [346]	1	
5	283431	LINE – HYDRAULIC	1	
	135865	O-RING – Ø1.78 X Ø9.25		
6	283432	LINE – HYDRAULIC	1	
	135865	O-RING – Ø1.78 X Ø9.25		
7	283433	LINE – HYDRAULIC	1	
	135865	O-RING – Ø1.78 X Ø9.25		
8	283057	HOSE – HYD	1	
9	283058	HOSE – HYD	1	
10	283059	HOSE – HYD	1	
11	135778	FITTING – ADAPTER	3	
12	136146	FITTING – ELBOW 45° BLKHD HYD [347]	3	
13	136095	FITTING – ELBOW 90° HYD	2	
14	232395	CLAMP – ASSY [348]	2	
15	184303	CLAMP – COVER PLATE	2	
16	283791	CLAMP – ASSY [348]	1	
17	255461	PLATE – COVER	1	
18	283906	CLAMP – LINE TOP FLEX RH	1	
19	283907	CLAMP – LINE MIDDLE FLEX RH	1	
20	311462	CLAMP – LINE TOP FLEX RH	1	
21	312655	STUD – THRD CLAMP PATCH BLACK	2	
22	283820	CLAMP – LINE BOTTOM RH	5	
23	283818	CLAMP – LINE MIDDLE RH	5	
24	311451	CLAMP – LINE TOP RH	5	
25	312654	STUD – THRD CLAMP PATCH WING	10	
26	311360	SHIELD – HOSE TRANSITION RH	1	
27	170851	CINCH STRAP – 10 IN. LG	1	
28	49227	FASTENER – CABLE TIE, GREEN	4	
29	40701	FASTENER – CABLE TIE, YELLOW	1	

342. Used for FD240 headers.
343. Used for FD245 and FD250 headers.
344. Used for FD245 and FD250 headers.
345. Used for FD250 headers.
346. Used for FD250 headers.
347. The fitting includes a securing nut (NSS).
348. The clamp assembly includes two clamp halves (NSS). It does NOT include the cover plate or hardware.

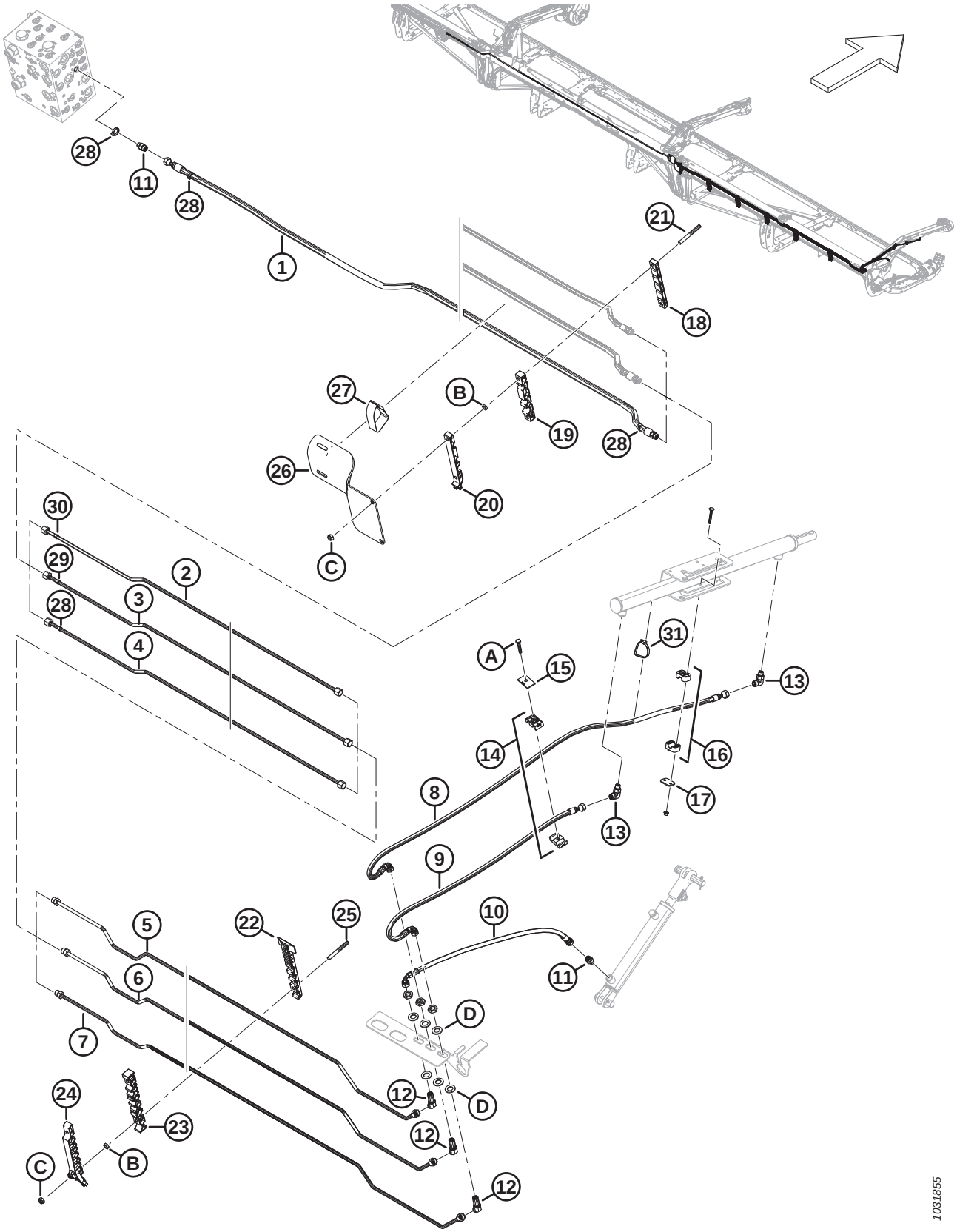
28
11
28
1
21
18
27
B
19
28
26
20
C
30
29
28
2
3
4
A
15
31
13
14
16
17
8
13
9
10
11
22
25
5
6
7
D
12
D
12
12
24
23
C
B
1031855

Ref	Part Number	Description	Qty	Serial Number
30	252794	FASTENER – CABLE TIE, PURPLE	1	
31	30753	FASTENER – CABLE TIE, BLACK	1	
A	30660	BOLT – HEX HD M8 X 1.25 X 45-8.8-AA1J		
B	136442	NUT – HEX THIN M10 X 1.5-05-AA1J		
C	184692	NUT – HEX NYLOC M10 X 1.5-8-AA1J		
D	136540	WASHER – FLAT		

88 Hydraulics – Upper Cross Auger

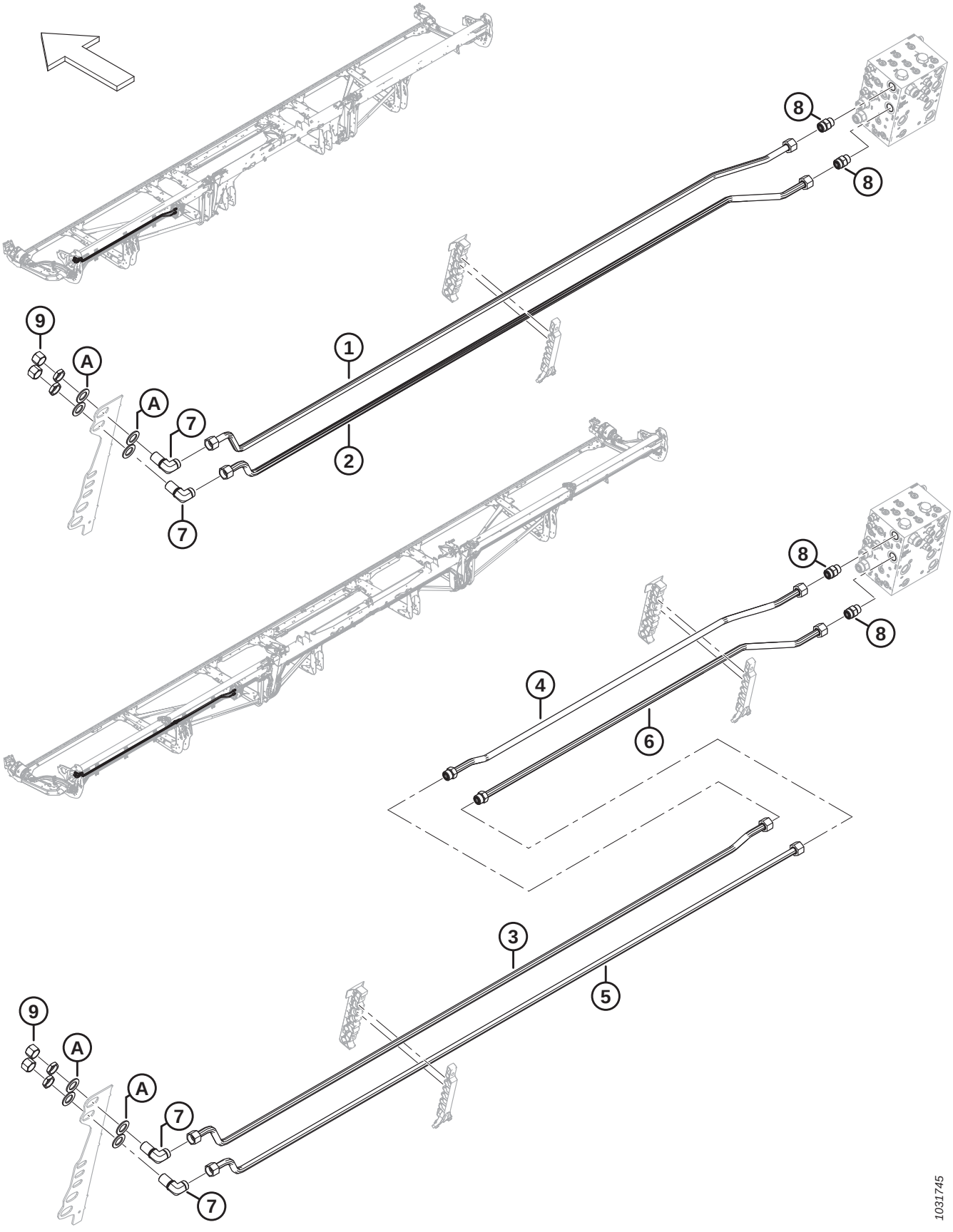

Ref	Part Number	Description	Qty	Serial Number
	B7338	KIT – 25 FT. UPPER CROSS AUGER HYDRAULICS [349]		
	B7117	KIT – 30 FT. UPPER CROSS AUGER HYDRAULICS [349]		
	B7118	KIT – 35 FT. UPPER CROSS AUGER HYDRAULICS [349]		
	B7119	KIT – 40 FT. AND 45 FT. UPPER CROSS AUGER HYDRAULICS [349]		
	B7120	KIT – 41 FT. UPPER CROSS AUGER HYDRAULICS [349]		
	B7121	KIT – 50 FT. UPPER CROSS AUGER HYDRAULICS [349]		
1	323355	LINE – HYDRAULIC (FD225) [350]	1	
	283052	LINE – HYDRAULIC (FD230) [351]	1	
	283164	LINE – HYDRAULIC (FD235) [352]	1	
	283471	LINE – HYDRAULIC (FD240 AND FD245) [353]	1	
	283462	LINE – HYDRAULIC (FD241) [354]	1	
2	323355	LINE – HYDRAULIC (FD225) [355]	1	
	283051	LINE – HYDRAULIC (FD230) [356]	1	
	283205	LINE – HYDRAULIC (FD235) [357]	1	
	283470	LINE – HYDRAULIC (FD240 AND FD245) [358]	1	
	283461	LINE – HYDRAULIC (FD241) [359]	1	
3	283469	LINE – HYDRAULIC (FD250) [360]	1	
4	283200	LINE – HYDRAULIC (FD250) [361]	1	
	135868	O-RING – Ø1.78 X Ø18.77		
5	283468	LINE – HYDRAULIC (FD250) [361]	1	
6	283199	LINE – HYDRAULIC (FD250) [361]	1	
	135868	O-RING – Ø1.78 X Ø18.77		
7	136245	FITTING – ELBOW 90° BULKHEAD HYD [362]	2	
	135868	O-RING – Ø1.78 X Ø18.77		
8	135788	FITTING – ADAPTER (UCAP, UCAR) [363]	2	
	30971	O-RING – Ø2.95 X Ø23.47		
	135868	O-RING – Ø1.78 X Ø18.77		
9	135889	CAP – HYD SAE - 12 ORFS	2	

349. Kits are available through Whole Goods only.
350. Used for FD225 headers.
351. Used for FD230 headers.
352. Used for FD235 headers.
353. Used for FD240 and FD245 headers.
354. Used for FD241 headers.
355. Used for FD225 headers.
356. Used for FD230 headers.
357. Used for FD235 headers.
358. Used for FD240 and FD245 headers.
359. Used for FD241 headers.
360. Used for FD250 headers.
361. Used for FD250 headers.
362. The fitting includes a securing nut.
363. Connects to ports UCAP and UCAR.

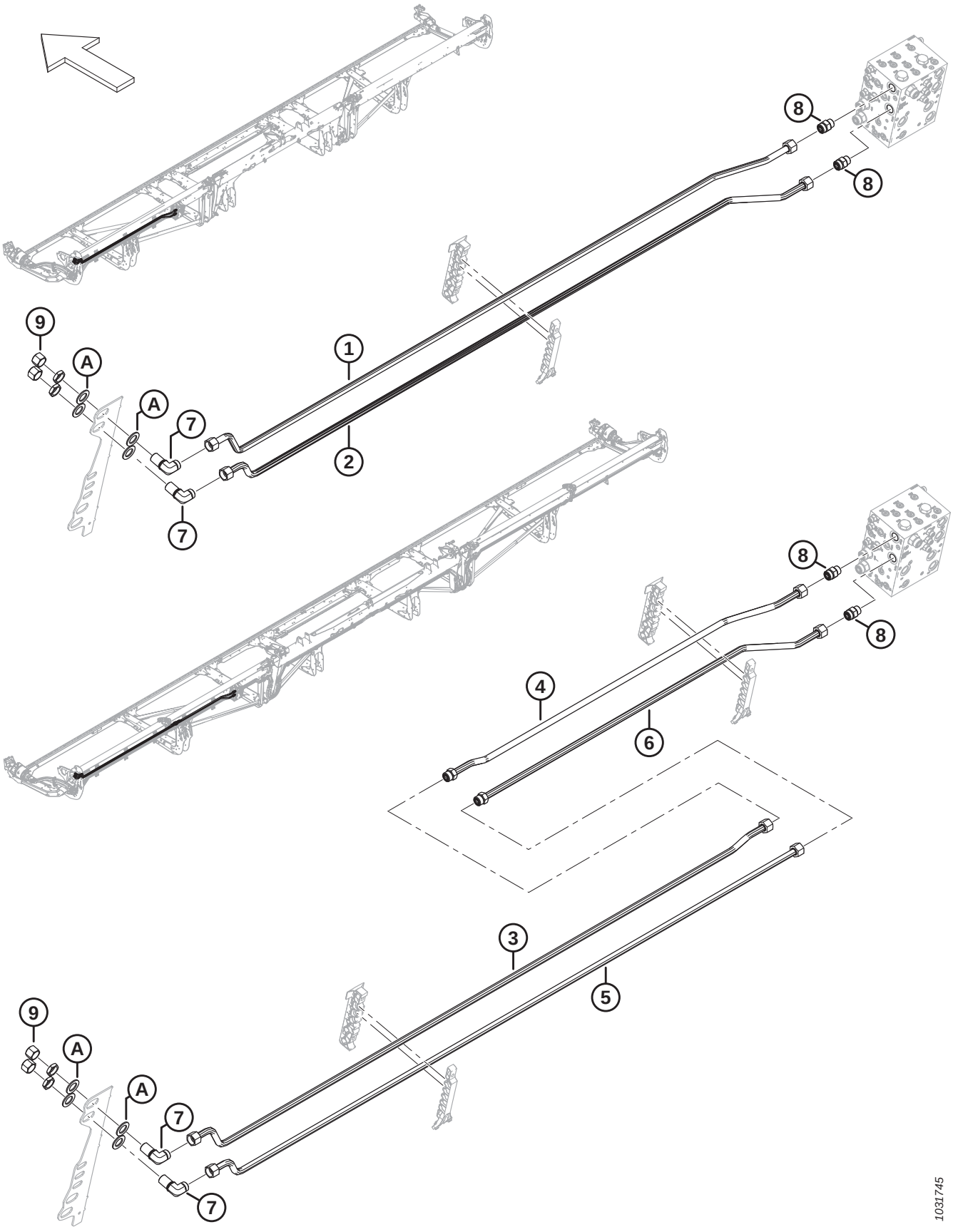
8
8
9
A
A
7
1
2
7
8
8
4
6
3
5
9
A
A
7
7
1031745

Ref	Part Number	Description	Qty	Serial Number
A	136355	WASHER – FLAT 2.0 IN OD ZP	4	

89 Hydraulics – Reel Drive, Single Reel

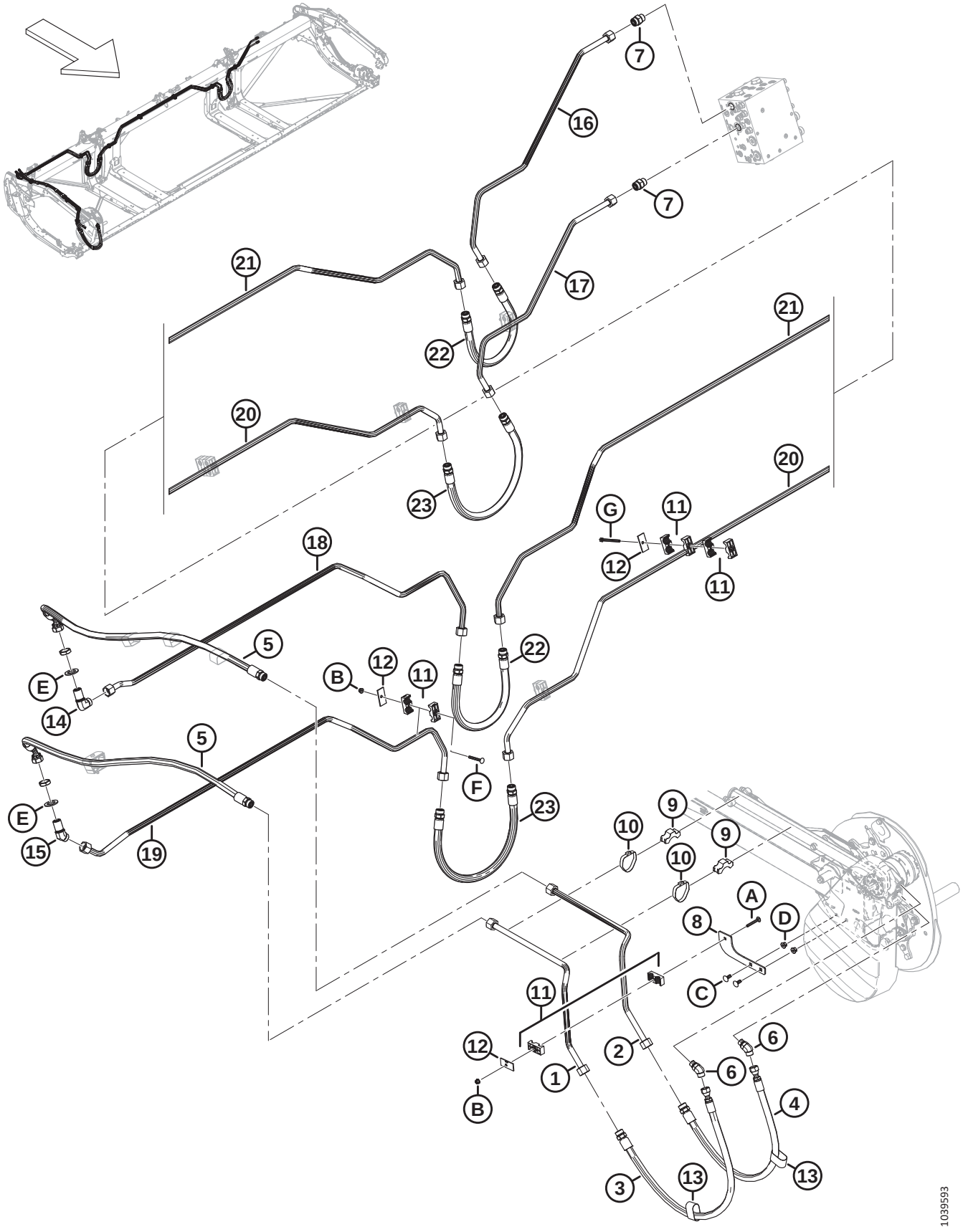

Ref	Part Number	Description	Qty	Serial Number
1	323428	LINE – HYDRAULIC	1	
2	323429	LINE – HYDRAULIC	1	
3	283092	HOSE – HYD	1	
	135868	O-RING – Ø1.78 X Ø18.77		
4	283091	HOSE – HYD	1	
	135868	O-RING – Ø1.78 X Ø18.77		
5	323519	HOSE – HYD (FD225)	2	
	135868	O-RING – Ø1.78 X Ø18.77		
6	136327	FITTING – ELBOW 45° HYD	2	
	44210	O-RING – Ø2.46 X Ø19.18		
	135867	O-RING – Ø1.78 X Ø15.60		
7	135788	FITTING – ADAPTER	2	
	30971	O-RING – Ø2.95 X Ø23.47		
	135868	O-RING – Ø1.78 X Ø18.77		
8	273285	SUPPORT – BRACKET	1	
9	232405	CLAMP – LINE	2	
10	112823	CLAMP – HOSE	2	
11	232397	CLAMP – ASSY [364]	9	
12	232233	CLAMP – COVER PLATE	7	
13	135443	CINCH STRAP 4 IN. LG	2	
14	136245	FITTING – ELBOW 90° BULKHEAD HYD [365]	1	
	135868	O-RING – Ø1.78 X Ø18.77		
15	136527	FITTING – ELBOW 45° BULKHEAD [365]	1	
	135868	O-RING – Ø1.78 X Ø18.77		
16	323346	LINE – HYDRAULIC	1	
17	323347	LINE – HYDRAULIC	1	
18	323348	LINE – HYDRAULIC	1	
19	323349	LINE – HYDRAULIC	1	
20	283035	LINE – HYDRAULIC	1	
21	283036	LINE – HYDRAULIC	1	
22	283070	HOSE – HYD	2	
23	283378	HOSE – HYD	2	
A	136486	BOLT – RHSN M8 X 1.25 X 60-8.8-AA1J		
B	135337	NUT – HEX FLG CTR LK M8 X 1.25-8-AA1J		
C	135785	BOLT – RHSN M10 X 1.5 X 25-8.8-AA1J		
D	135799	NUT – HEX FLG CTR LOC M10 X 1.5-10		
E	136355	WASHER – FLAT 2.0 IN. OD ZP		
F	136779	BOLT – RHSN M8 X 1.25 X 70-8.8-AA1J		
G	252002	BOLT – HEX HD M8 X 1.25 X 100-8.8-AA1J [366]		

364. The clamp assembly includes two clamp halves (NSS). It does NOT include the cover plate or hardware.
365. The fitting includes a securing nut (NSS).
366. This bolt attaches to the header frame and does not require a nut.

90 Hydraulics – Reel Drive, Double and Triple Reel

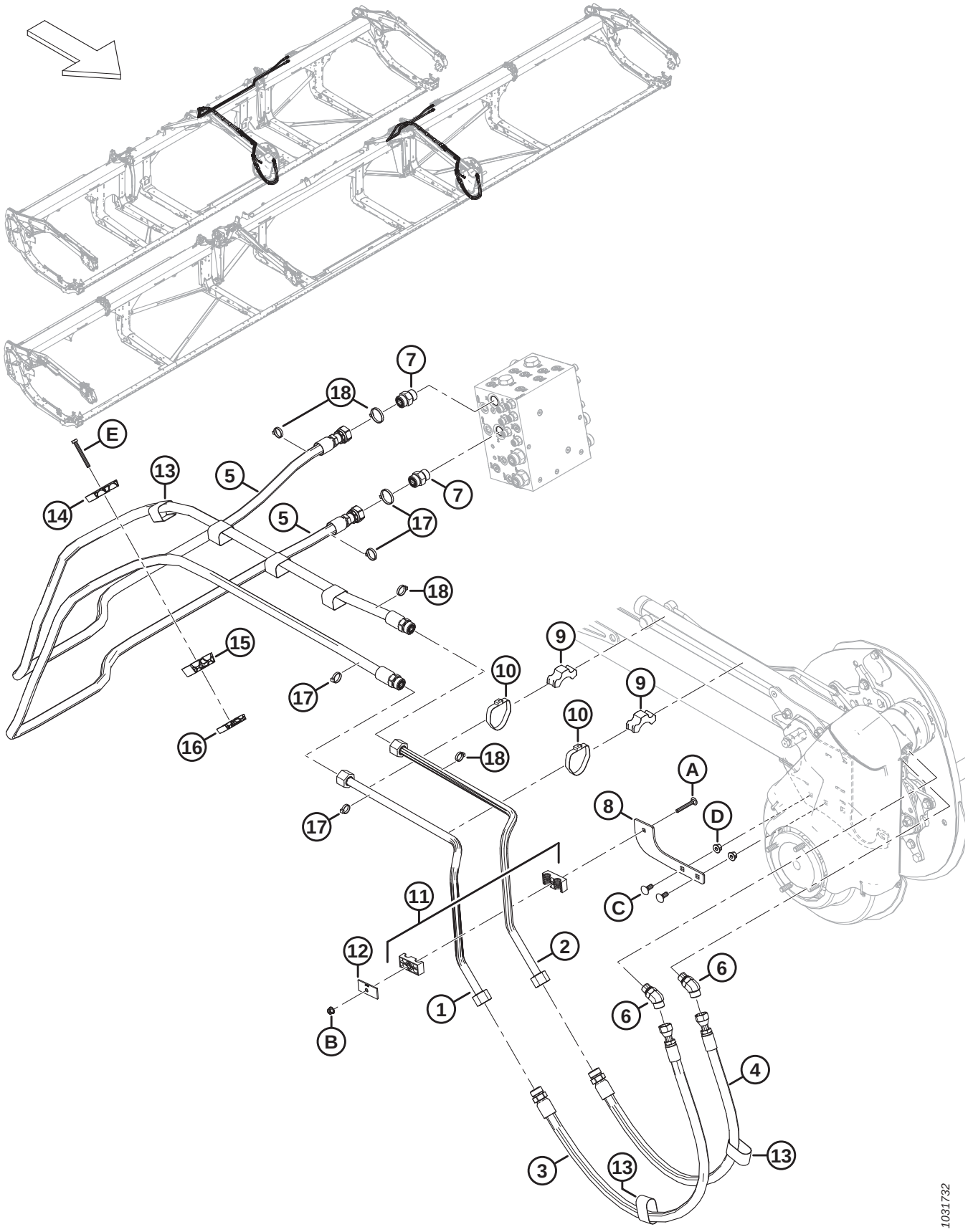

Ref	Part Number	Description	Qty	Serial Number
1	323428	LINE – HYDRAULIC	1	
	323808	KIT – REEL DRIVE STEEL LINES [367]	A/R	–451189
2	323429	LINE – HYDRAULIC	1	
	323808	KIT – REEL DRIVE STEEL LINES [367]	A/R	–451189
3	283092	HOSE – HYD	1	
	135868	O-RING – Ø1.78 X Ø18.77		
4	283091	HOSE – HYD	1	
	135868	O-RING – Ø1.78 X Ø18.77		
5	323662	HOSE – HYD (FD230, FD235, FD240, FD241) [368]	2	
	323667	HOSE – HYD (FD245, FD250) [369]	2	
	135868	O-RING – Ø1.78 X Ø18.77		
6	136327	FITTING – ELBOW 45° HYD	2	
	44210	O-RING – Ø2.46 X Ø19.18		
	135867	O-RING – Ø1.78 X Ø15.60		
7	135788	FITTING – ADAPTER	2	
	30971	O-RING – Ø2.95 X Ø23.47		
	135868	O-RING – Ø1.78 X Ø18.77		
8	273285	SUPPORT – BRACKET	1	
9	232405	CLAMP – LINE	2	
10	112823	CLAMP – HOSE	2	
11	232397	CLAMP – ASSY [370]	1	
12	232233	CLAMP – COVER PLATE	1	
13	135443	CINCH STRAP 4 IN. LG	2	
14	283989	CLAMP – HOSE REEL TOP	1	
15	283988	CLAMP – HOSE REEL MIDDLE	1	
16	283987	CLAMP – HOSE REEL BOTTOM	1	
17	40701	FASTENER – CABLE TIE, YELLOW	4	
18	49232	FASTENER – CABLE TIE, WHITE	4	
A	136486	BOLT – RHSN M8 X 1.25 X 60-8.8-AA1J		
B	135337	NUT – HEX FLG CTR LK M8 X 1.25-8-AA1J		
C	135785	BOLT – RHSN M10 X 1.5 X 25-8.8-AA1J		
D	135799	NUT – HEX FLG CTR LOC M10 X 1.5-10		
E	184656	BOLT – HEX HD M8 X 1.25 X 70-8.8-AA1J		

367. The kit includes steel lines (MD #323428 and MD #323429) and is used to service machines built prior to model year 2023.
368. Used for FD230, FD235, FD240, and FD241 headers.
369. Used for FD245 and FD250 headers.
370. The clamp assembly includes two clamp halves (NSS). It does NOT include the cover plate or hardware.

91 Hydraulics – ContourMax™, Contour Wheels (FD225 and FD230)

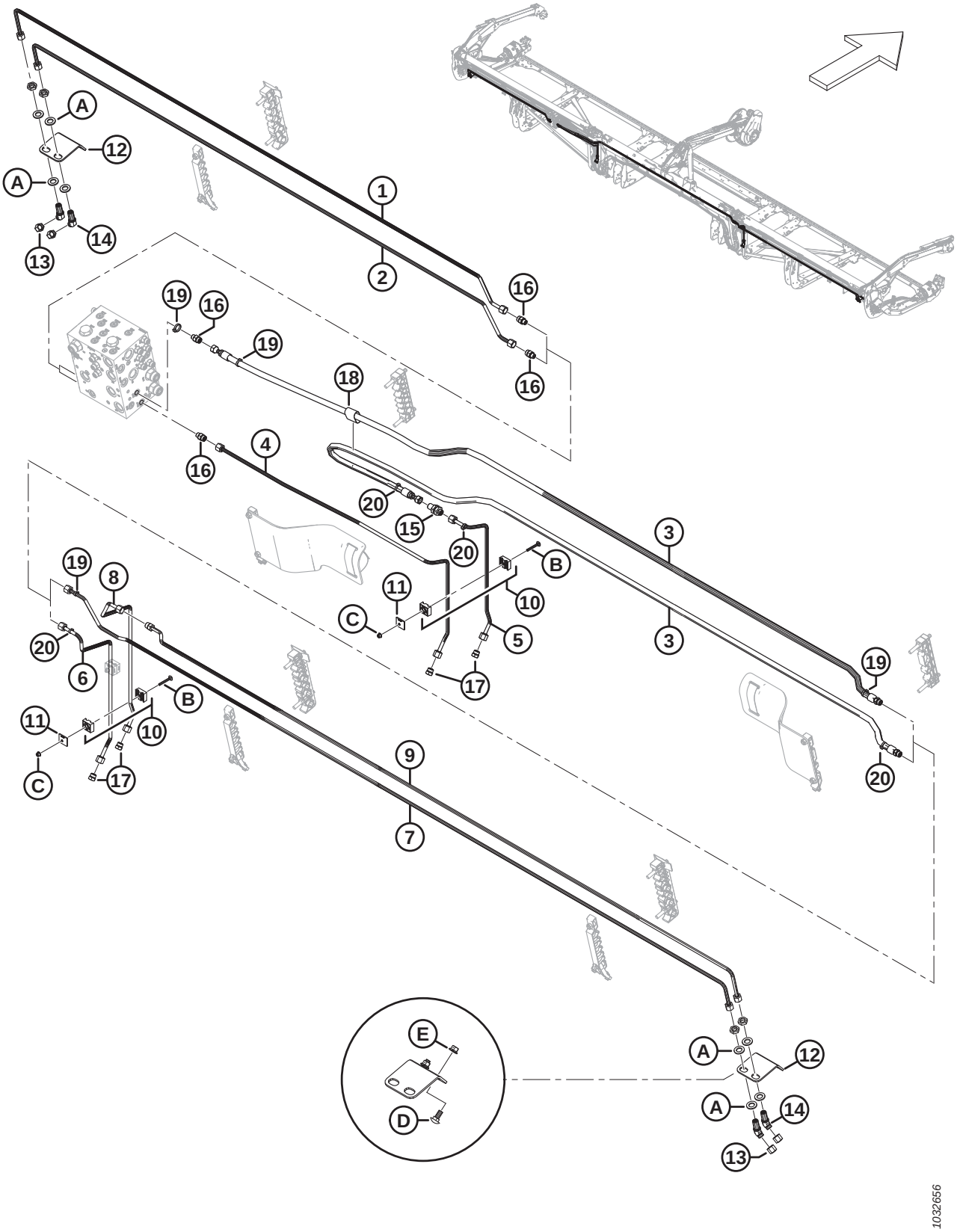

Ref	Part Number	Description	Qty	Serial Number
	B7340	KIT – 25 FT. CONTOURMAX PLUMBING PKG [371]		
	B7082	KIT – 30 FT. CONTOURMAX PLUMBING PKG. [371]		
1	323350	LINE – HYDRAULIC (FD225) [372]	1	
	313524	LINE – HYDRAULIC (FD230) [373]	1	
2	323351	LINE – HYDRAULIC (FD225) [372]	1	
	313523	LINE – HYDRAULIC (FD230) [373]	1	
3	283096	HOSE – HYD (FD225 AND FD230) [374]	2	
	135865	O-RING – Ø1.78 X Ø9.25		
4	313500	LINE – HYDRAULIC (FD225 AND FD230) [374]	1	
5	313499	LINE – HYDRAULIC (FD225 AND FD230) [374]	1	
6	283773	LINE – HYDRAULIC (FD225 AND FD230) [374]	1	
7	323353	LINE – HYDRAULIC (FD225) [372]	1	
	313526	LINE – HYDRAULIC (FD230) [373]	1	
8	313511	LINE – HYDRAULIC (FD225 AND FD230) [374]	1	
9	323352	LINE – HYDRAULIC (FD225) [372]	**1**	
	313525	LINE – HYDRAULIC (FD230) [373]	1	
	135865	O-RING – Ø1.78 X Ø9.25		
10	313496	CLAMP – ASSY [375]	3	
11	313497	PLATE – COVER CLAMP	3	
12	312134	PLATE – BULKHEAD MTG	2	
13	136325	CAP – HYD SAE-6 ORFS	4	
14	136146	FITTING – ELBOW 45° BLKHD HYD [376]	4	
	135865	O-RING – Ø1.78 X Ø9.25		
15	136145	FITTING – BULKHEAD UNION HYD	1	
	135865	O-RING – Ø1.78 X Ø9.25		
16	135778	FITTING – ADAPTER	4	
	50219	O-RING – Ø1.98 X Ø11.89		
	135865	O-RING – Ø1.78 X Ø9.25		
17	136326	PLUG – HYD SAE-6 ORFS	4	
18	135443	CINCH STRAP – 4 IN. LG	1	
19	40703	FASTENER – CABLE TIE, BLUE	4	
20	40701	FASTENER – CABLE TIE, YELLOW	4	
A	136540	WASHER – FLAT		

371. The kit includes all listed parts to make the header ContourMax™ ready if not factory configured. You will also require bundle B7480 to complete the install; refer to Sections *118 (Option) ContourMax™ – Outer Contour Wheels, page 281* and *119 (Option) ContourMax™ – Inner Contour Wheels, page 285*. Kits are available through Whole Goods only.
372. Used for FD225 headers.
373. Used for FD230 headers.
374. Used for FD225 and FD230 headers.
375. The clamp assembly includes two clamp halves (NSS). It does NOT include the cover plate or hardware.
376. The fitting includes a securing nut (NSS).

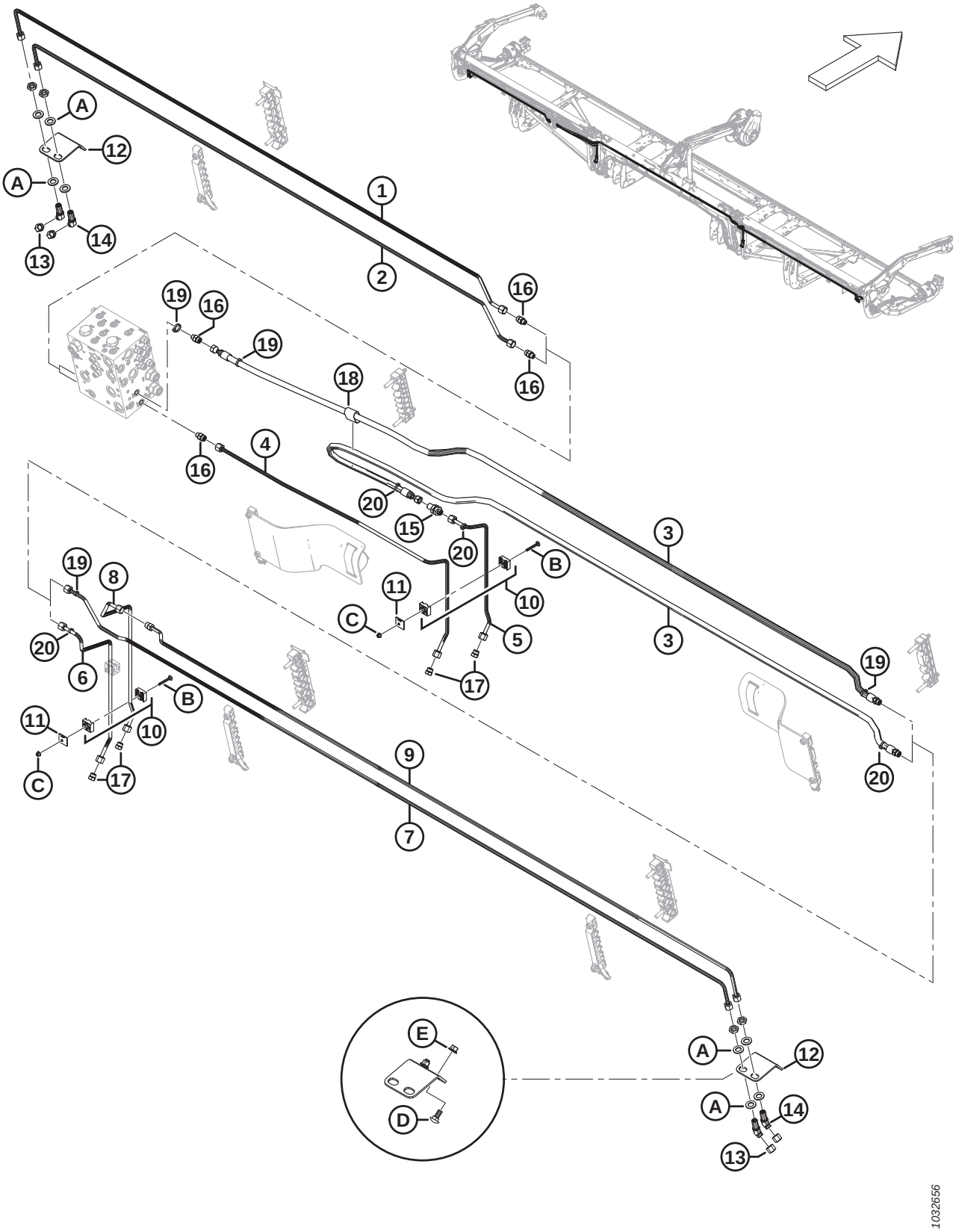
A
12
A
14
13
1
2
16
19
16
19
16
18
16
4
20
15
20
3
B
19
8
11
C
10
5
20
6
17
3
19
B
11
10
C
17
9
20
7
E
D
A
12
A
14
13
1032656

Ref	Part Number	Description	Qty	Serial Number
B	184644	BOLT – RHSN M6 X 1 X 50-8.8-ZINC		
C	152668	NUT – HEX FLG CTR LOC M6 X 1-8		
D	135785	BOLT – RHSN M10 X 1.5 X 25-8.8-AA1J		
E	135799	NUT – HEX FLG CTR LOC M10 X 1.5-10		

92 Hydraulics – ContourMax™, Contour Wheels (FD235)

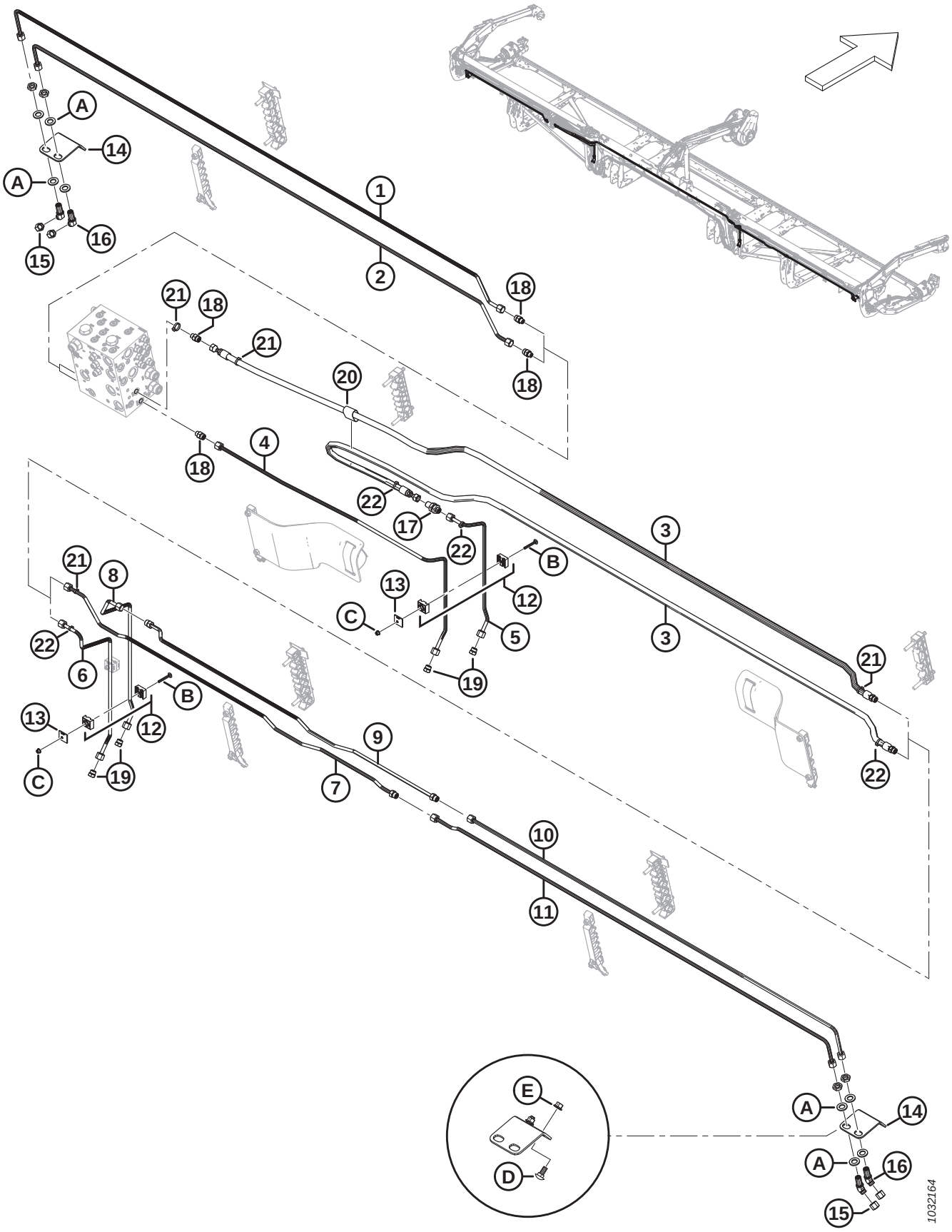

Ref	Part Number	Description	Qty	Serial Number
	B7083	KIT – 35 FT. CONTOURMAX PLUMBING PKG. [377]		
1	283017	LINE – HYDRAULIC (FD235)	1	
2	283016	LINE – HYDRAULIC (FD235)	1	
3	283096	HOSE – HYD (FD235)	2	
	135865	O-RING – Ø1.78 X Ø9.25		
4	313500	LINE – HYDRAULIC (FD235)	1	
5	313499	LINE – HYDRAULIC (FD235)	1	
6	283773	LINE – HYDRAULIC (FD235)	1	
7	323362	LINE – HYDRAULIC (FD235)	1	
	135865	O-RING – Ø1.78 X Ø9.25		
8	313511	LINE – HYDRAULIC (FD235)	1	
9	323361	LINE – HYDRAULIC (FD235)	1	
	135865	O-RING – Ø1.78 X Ø9.25		
10	283018	LINE – HYDRAULIC (FD235)	1	
11	283014	LINE – HYDRAULIC (FD235)	1	
12	313496	CLAMP – ASSY [378]	3	
13	313497	PLATE – COVER CLAMP	3	
14	312134	PLATE – BULKHEAD MTG	2	
15	136325	CAP – HYD SAE-6 ORFS	4	
16	136146	FITTING – ELBOW 45° BLKHD HYD [379]	4	
	135865	O-RING – Ø1.78 X Ø9.25		
17	136145	FITTING – BULKHEAD UNION HYD	1	
	135865	O-RING – Ø1.78 X Ø9.25		
18	135778	FITTING – ADAPTER	4	
	50219	O-RING – Ø1.98 X Ø11.89		
	135865	O-RING – Ø1.78 X Ø9.25		
19	136326	PLUG – HYD SAE-6 ORFS	4	
20	135443	CINCH STRAP – 4 IN. LG	1	
21	40703	FASTENER – CABLE TIE, BLUE	4	
22	40701	FASTENER – CABLE TIE, YELLOW	4	
A	136540	WASHER – FLAT		
B	184644	BOLT – RHSN M6 X 1 X 50-8.8-ZINC		
C	152668	NUT – HEX FLG CTR LOC M6 X 1-8		
D	135785	BOLT – RHSN M10 X 1.5 X 25-8.8-AA1J		
E	135799	NUT – HEX FLG CTR LOC M10 X 1.5-10		

377. The kit includes all listed parts to make the header ContourMax™ ready if not factory configured. You will also require bundle B7480 to complete the install; refer to Sections *118 (Option) ContourMax™ – Outer Contour Wheels, page 281* and *119 (Option) ContourMax™ – Inner Contour Wheels, page 285*. Kits are available through Whole Goods only.
378. The clamp assembly includes two clamp halves (NSS). It does NOT include the cover plate or hardware.
379. The fitting includes a securing nut (NSS).

93 Hydraulics – ContourMax™, Contour Wheels (FD240, FD241, FD245, and FD250)

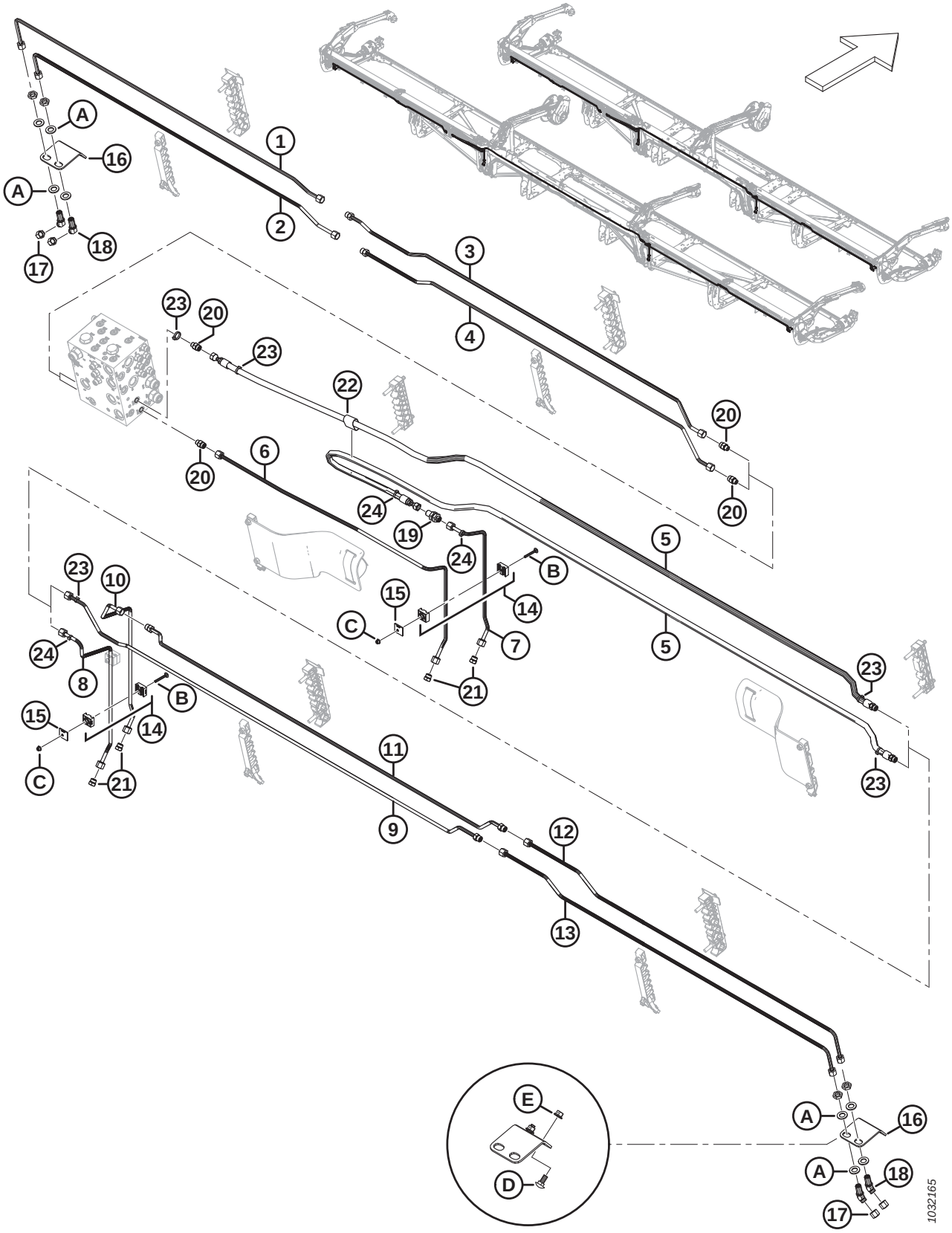

Ref	Part Number	Description	Qty	Serial Number
	B7113	KIT – 40 FT. CONTOURMAX PLUMBING PKG. [380]		
	B7114	KIT – 41 FT. CONTOURMAX PLUMBING PKG. [380]		
	B7193	KIT – 45 FT. CONTOURMAX PLUMBING PKG. [380]		
	B7116	KIT – 50 FT. CONTOURMAX PLUMBING PKG. [380]		
1	313557	LINE – HYDRAULIC (FD240 AND FD245) [381]	1	
	283837	LINE – HYDRAULIC (FD241) [382]	1	
	283833	LINE – HYDRAULIC (FD250) [383]	1	
2	313556	LINE – HYDRAULIC (FD240 AND FD245) [384]	1	
	283836	LINE – HYDRAULIC (FD241) [385]	1	
	283831	LINE – HYDRAULIC (FD250) [386]	1	
3	283832	LINE – HYDRAULIC (FD240, FD241, FD245, AND FD250)	1	
	135865	O-RING – Ø1.78 X Ø9.25		
4	283830	LINE – HYDRAULIC (FD240, FD241, FD245, AND FD250)	1	
	135865	O-RING – Ø1.78 X Ø9.25		
5	283096	HOSE – HYD (FD240, FD241) [387]	2	
	283507	HOSE – HYD (FD245 AND FD250) [388]	2	
	135865	O-RING – Ø1.78 X Ø9.25		
6	313500	LINE – HYDRAULIC (FD240, FD241, FD245, AND FD250)	1	
7	313499	LINE – HYDRAULIC (FD240, FD241, FD245, AND FD250)	1	
8	283773	LINE – HYDRAULIC (FD240, FD241, FD245, AND FD250)	1	
9	313530	LINE – HYDRAULIC (FD240 AND FD245) [384]	1	
	283839	LINE – HYDRAULIC (FD241) [385]	1	
	283012	LINE – HYDRAULIC (FD250) [386]	1	
	135865	O-RING – Ø1.78 X Ø9.25		
10	313511	LINE – HYDRAULIC (FD240, FD241, FD245, AND FD250)	1	
11	313529	LINE – HYDRAULIC (FD240 AND FD245) [384]	1	
	283838	LINE – HYDRAULIC (FD241) [385]	1	
	283015	LINE – HYDRAULIC (FD250) [386]	1	
	135865	O-RING – Ø1.78 X Ø9.25		
12	283776	LINE – HYDRAULIC (FD240, FD241, FD245, AND FD250)	1	
13	283777	LINE – HYDRAULIC (FD240, FD241, FD245, AND FD250)	1	

380. The kit includes all listed parts to make the header ContourMax™ ready if not factory configured. You will also require bundle B7480 to complete the install; refer to Sections *118 (Option) ContourMax™ – Outer Contour Wheels, page 281* and *119 (Option) ContourMax™ – Inner Contour Wheels, page 285*. Kits are available through Whole Goods only.
381. Used for FD240 and FD245 headers.
382. Used for FD241 headers.
383. Used for FD250 headers.
384. Used for FD240 and FD245 headers.
385. Used for FD241 headers.
386. Used for FD250 headers.
387. Used for FD240 and FD241 headers.
388. Used for FD245 and FD250 headers.

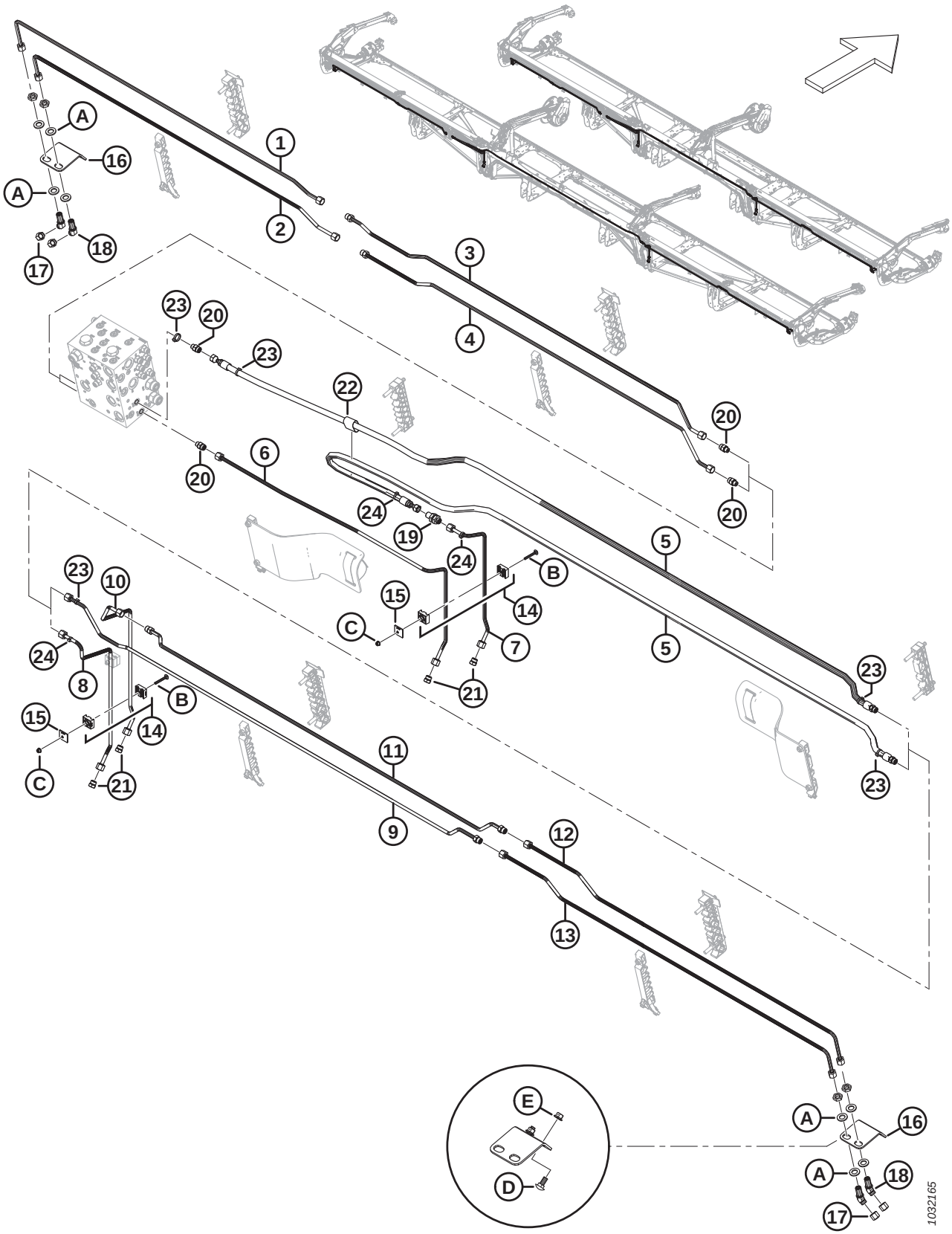
A
16
A
18
17
1
2
3
4
23
20
23
22
20
6
20
24
19
24
20
5
B
15
C
14
7
21
5
23
23
10
24
8
B
15
14
C
21
11
9
12
13
E
D
A
16
A
18
17
1032165

Ref	Part Number	Description	Qty	Serial Number
14	313496	CLAMP – ASSY [389]	3	
15	313497	PLATE – COVER CLAMP	3	
16	312134	PLATE – BULKHEAD MTG	2	
17	136325	CAP – HYD SAE-6 ORFS	4	
18	136146	FITTING – ELBOW 45° BLKHD HYD [390]	4	
	135865	O-RING – Ø1.78 X Ø9.25		
19	136145	FITTING – BULKHEAD UNION HYD	1	
	135865	O-RING – Ø1.78 X Ø9.25		
20	135778	FITTING – ADAPTER	4	
	50219	O-RING – Ø1.98 X Ø11.89		
	135865	O-RING – Ø1.78 X Ø9.25		
21	136326	PLUG – HYD SAE-6 ORFS	4	
22	135443	CINCH STRAP – 4 IN. LG	1	
23	40703	FASTENER – CABLE TIE, BLUE	4	
24	40701	FASTENER – CABLE TIE, YELLOW	4	
A	136540	WASHER – FLAT		
B	184644	BOLT – RHSN M6 X 1 X 50-8.8-ZINC		
C	152668	NUT – HEX FLG CTR LOC M6 X 1-8		
D	135785	BOLT – RHSN M10 X 1.5 X 25-8.8-AA1J		
E	135799	NUT – HEX FLG CTR LOC M10 X 1.5-10		

389. The clamp assembly includes two clamp halves (NSS). It does NOT include the cover plate or hardware.
390. The fitting includes a securing nut (NSS).

94 Hydraulics – VertiBlade™ Vertical Knife (FD225, FD230, FD235, FD241, and FD245)

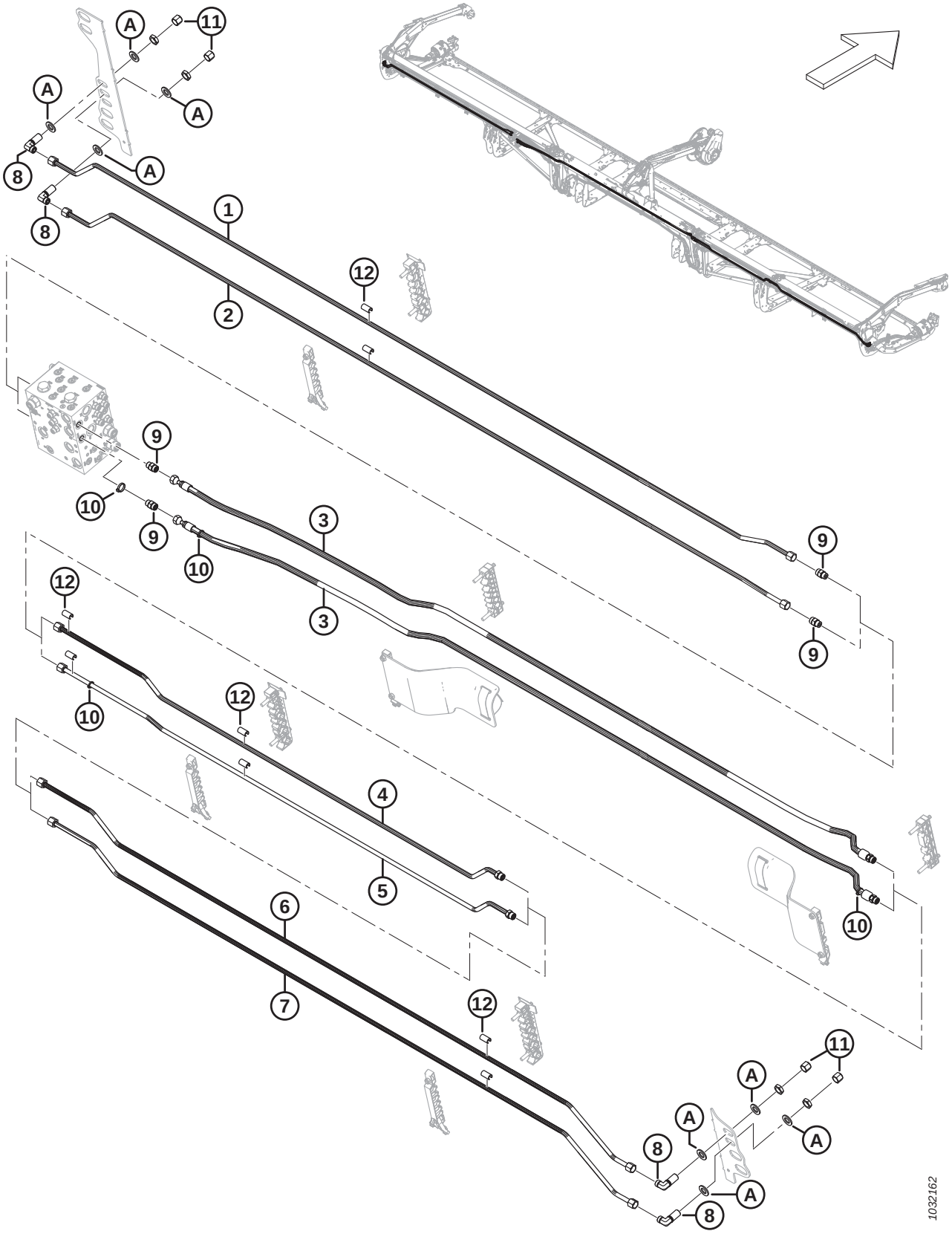

Ref	Part Number	Description	Qty	Serial Number
	B7339	KIT – 25 FT. VERTIBLADE PLUMBING PKG. [391]		
	B7127	KIT – 30 FT. VERTIBLADE PLUMBING PKG. [391]		
	B7128	KIT – 35 FT. VERTIBLADE PLUMBING PKG. [391]		
	B7130	KIT – 41 FT. VERTIBLADE PLUMBING PKG. [391]		
	B7195	KIT – 45 FT. VERTIBLADE PLUMBING PKG. [391]		
1	323827	LINE – HYDRAULIC (FD225) [392]	1	
	283050	LINE – HYDRAULIC (FD230) [393]	1	
	283160	LINE – HYDRAULIC (FD235) [394]	1	
	283460	LINE – HYDRAULIC (FD241) [395]	1	
	283435	LINE – HYDRAULIC (FD245) [396]	1	
2	323826	LINE – HYDRAULIC (FD225) [397]	1	
	283049	LINE – HYDRAULIC (FD230) [398]	1	
	283159	LINE – HYDRAULIC (FD235) [399]	1	
	283459	LINE – HYDRAULIC (FD241) [400]	1	
	283434	LINE – HYDRAULIC (FD245) [401]	1	
3	283097	HOSE – HYD (FD225, FD230, FD235, AND FD241) [402]	2	
	283560	HOSE – HYD (FD245) [403]	2	
	135866	O-RING – Ø1.78 X Ø12.42		
4	323829	LINE – HYDRAULIC (FD225) [397]	1	
	283081	LINE – HYDRAULIC (FD230) [398]	1	
	283161	LINE – HYDRAULIC (FD235) [399]	1	
	283194	LINE – HYDRAULIC (FD241) [400]	1	
	283436	LINE – HYDRAULIC (FD245) [401]	1	
	135866	O-RING – Ø1.78 X Ø12.42		

391. The kit includes all listed parts to make the header VertiBlade™ Vertical Knife ready if not factory configured. Kits are available through Whole Goods only.
392. Used for FD225 headers.
393. Used for FD230 headers.
394. Used for FD235 headers.
395. Used for F241 headers.
396. Used for FD245 headers.
397. Used for FD225 headers.
398. Used for FD230 headers.
399. Used for FD235 headers.
400. Used for F241 headers.
401. Used for FD245 headers.
402. Used for FD225, FD230, FD235, and FD241 headers.
403. Used for FD245 headers.

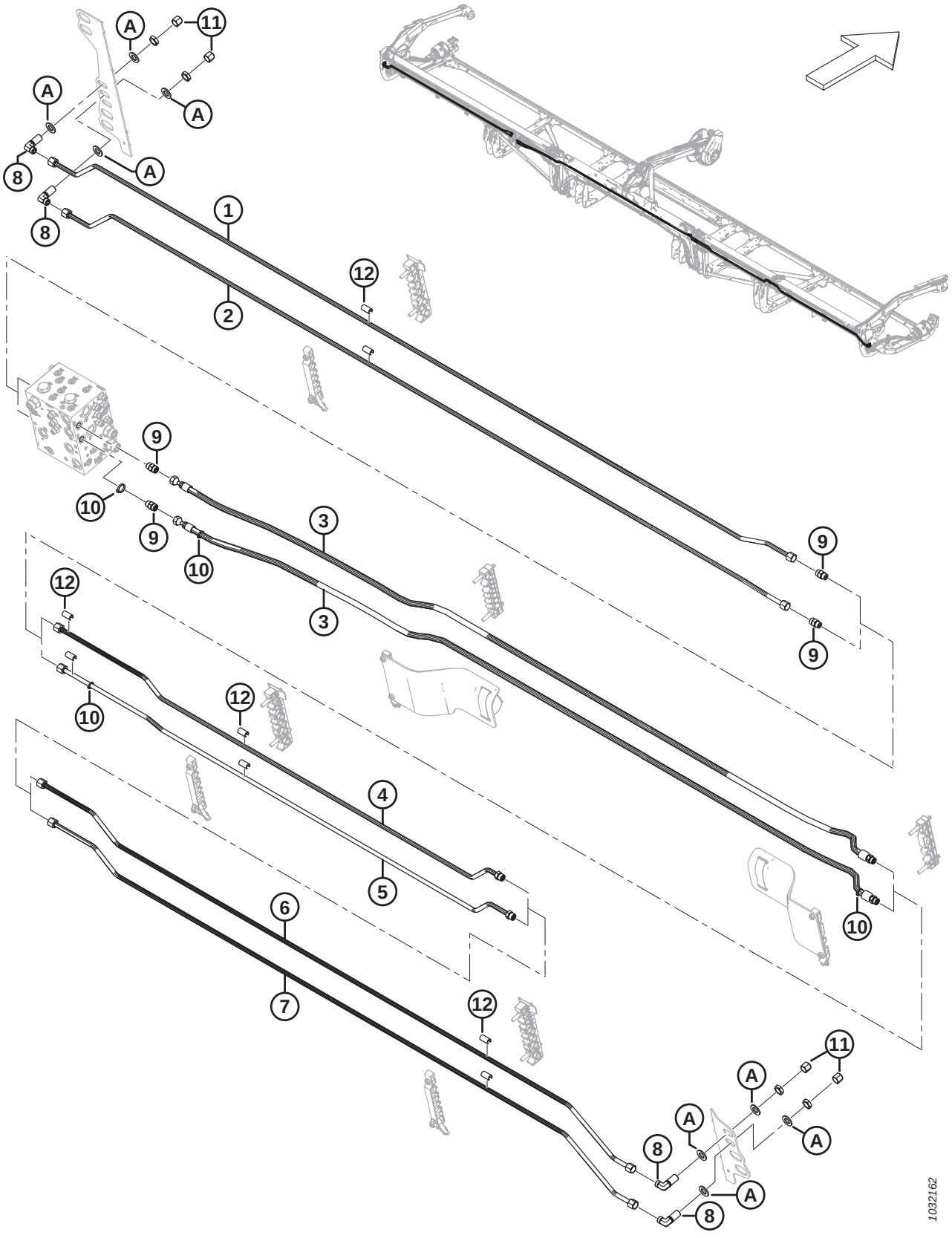
A
11
A
A
8
A
8
1
2
12
9
10
9
10
3
3
9
9
12
10
12
4
5
6
7
12
11
A
A
A
8
A
8
1032162

Ref	Part Number	Description	Qty	Serial Number
5	323828	LINE – HYDRAULIC (FD225) [404]	1	
	283082	LINE – HYDRAULIC (FD230) [405]	1	
	283162	LINE – HYDRAULIC (FD235) [406]	1	
	283195	LINE – HYDRAULIC (FD241) [407]	1	
	283437	LINE – HYDRAULIC (FD245) [408]	1	
	135866	O-RING – Ø1.78 X Ø12.42		
6	283438	LINE – HYDRAULIC (FD241 AND FD245) [409]	1	
7	283439	LINE – HYDRAULIC (FD241 AND FD245) [409]	1	
8	136244	FITTING – ELBOW 90° BULKHEAD HYD [410]	4	
	135866	O-RING – Ø1.78 X Ø12.42		
9	135780	FITTING – ADAPTER	4	
	44209	O-RING – Ø2.21 X Ø16.36		
	135866	O-RING – Ø1.78 X Ø12.42		
10	252795	FASTENER – CABLE TIE, PINK	4	
11	136741	CAP – HYD SAE 8 ORFS	4	
12	323003	SPACER – 1/2 IN. HYD LINE [411]		
A	18601	WASHER – FLAT SAE		

404. Used for FD225 headers.
405. Used for FD230 headers.
406. Used for FD235 headers.
407. Used for F241 headers.
408. Used for FD245 headers.
409. FD241 and FD245 headers only.
410. The fitting includes a securing nut.
411. Quantities: FD225 = 6, FD230 = 10, FD235 = 14, FD241 = 18, and FD245 = 18.

95 Hydraulics – VertiBlade™ Vertical Knife (FD250)

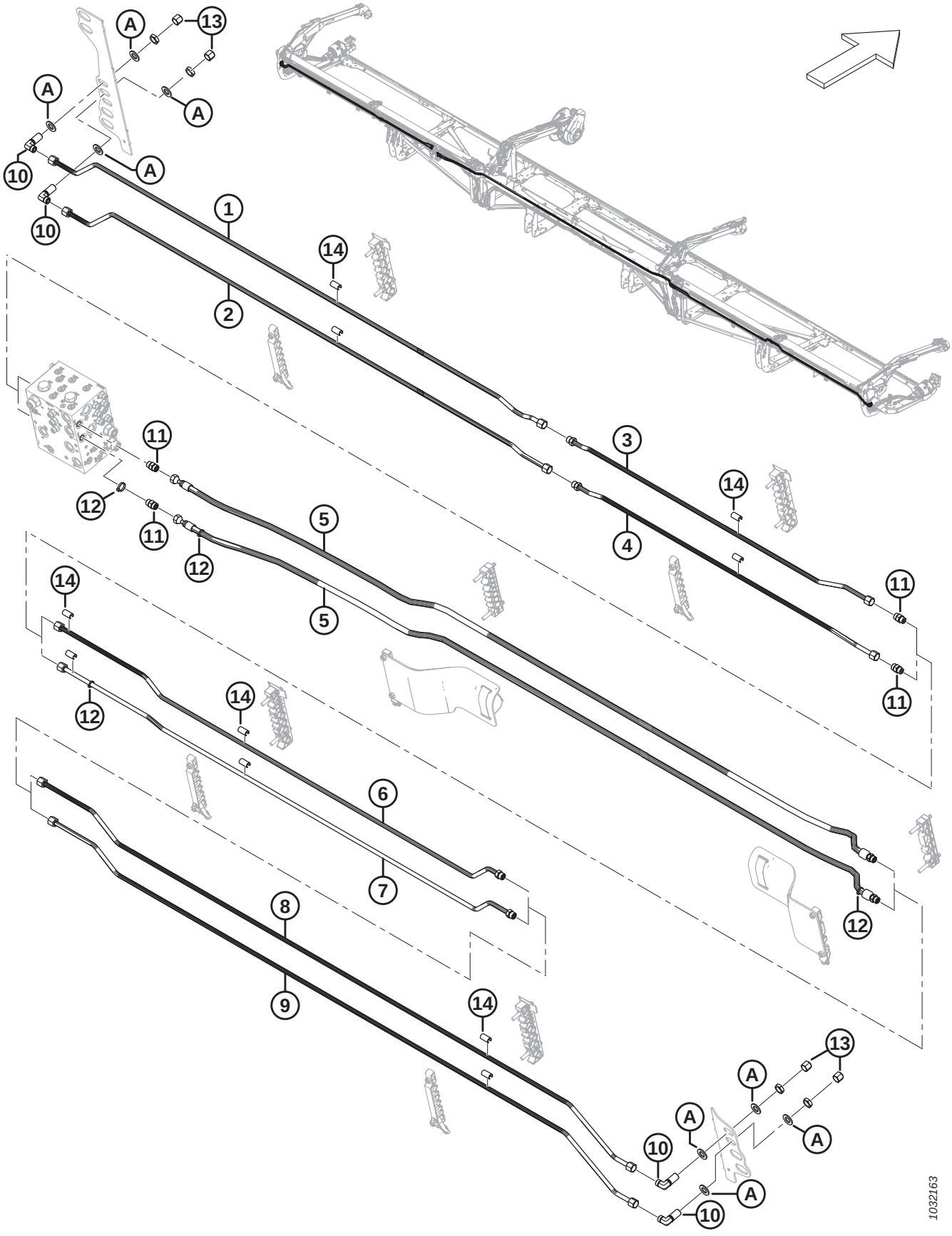

Ref	Part Number	Description	Qty	Serial Number
	B7131	KIT – 50 FT. VERTIBLADE PLUMBING PKG. [412]		
1	283467	LINE – HYDRAULIC	1	
2	283466	LINE – HYDRAULIC	1	
3	283191	LINE – HYDRAULIC	1	
	135866	O-RING – Ø1.78 X Ø12.42		
4	283190	LINE – HYDRAULIC	1	
	135866	O-RING – Ø1.78 X Ø12.42		
5	283560	HOSE – HYD	2	
	135866	O-RING – Ø1.78 X Ø12.42		
6	283192	LINE – HYDRAULIC	1	
	135866	O-RING – Ø1.78 X Ø12.42		
7	283193	LINE – HYDRAULIC	1	
	135866	O-RING – Ø1.78 X Ø12.42		
8	283438	LINE – HYDRAULIC	1	
9	283439	LINE – HYDRAULIC	1	
10	136244	FITTING – ELBOW 90° BULKHEAD HYD [413]	4	
	135866	O-RING – Ø1.78 X Ø12.42		
11	135780	FITTING – ADAPTER	4	
	44209	O-RING – Ø2.21 X Ø16.36		
	135866	O-RING – Ø1.78 X Ø12.42		
12	252795	FASTENER – CABLE TIE, PINK	4	
13	136741	CAP – HYD SAE 8 ORFS	4	
14	323003	SPACER – 1/2 IN. HYD LINE	22	
A	18601	WASHER – FLAT SAE		

412. The kit includes all listed parts to make the header VertiBlade™ Vertical Knife ready if not factory configured. Kits are available through Whole Goods only.
413. The fitting includes a securing nut.

96 Hydraulic Line Covers (FD225)

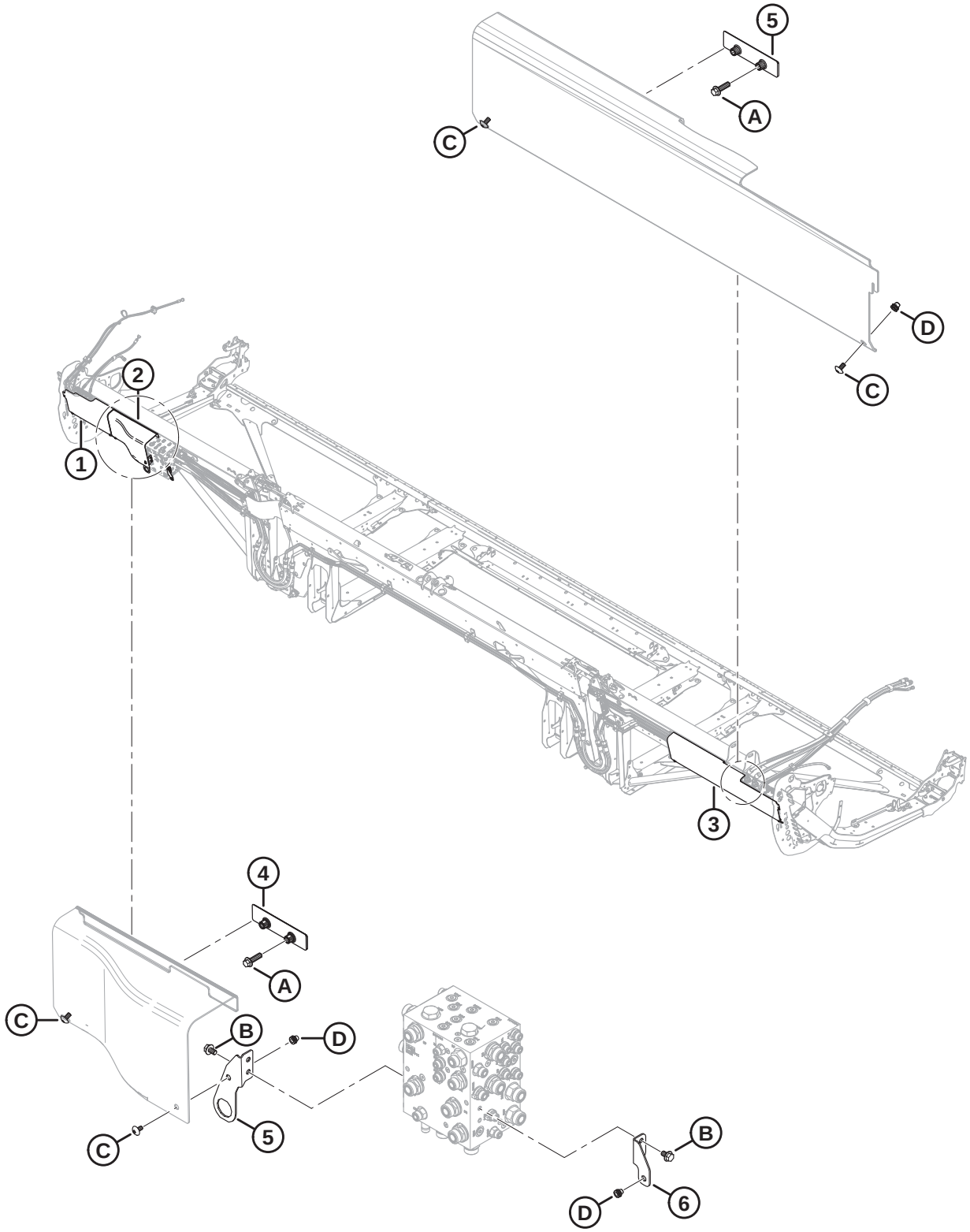

HYDRAULIC LINE COVERS (FD225)

Ref	Part Number	Description	Qty	Serial Number
1	323164	COVER – HYD LH END PLASTIC	1	
2	323795	COVER – HYD MANIFOLD LH	1	
3	340683	COVER – HYD RH END PLASTIC	1	
4	283849	BRACKET – HYD COVER SUPPORT	2	
5	323772	ASSY – CONNECTOR BRACKET [414]	1	
6	323773	ASSY – RH SHIELD BRACKET [415]	1	
A	136211	BOLT – HEX FLG HD M10 X 1.5 X 35-8.8-AA1J		
B	136151	BOLT – HEX FLG HD TFL M10 X 1.5 X 16-8.8-AA1J		
C	320336	SCREW – TORX TRUSS HD M8 X 1.25 X 16-SPCL-8.8-AA1T		
D	320448	RIVNUT – M8 X 1.25 HEX		

414. The assembly includes cover mounting connector bracket (NSS) and rivnut (MD #320448).
415. The assembly includes RH shield mounting bracket (NSS) and rivnut (MD #320448).

97 Hydraulic Line Covers (FD230, FD235, and FD240)

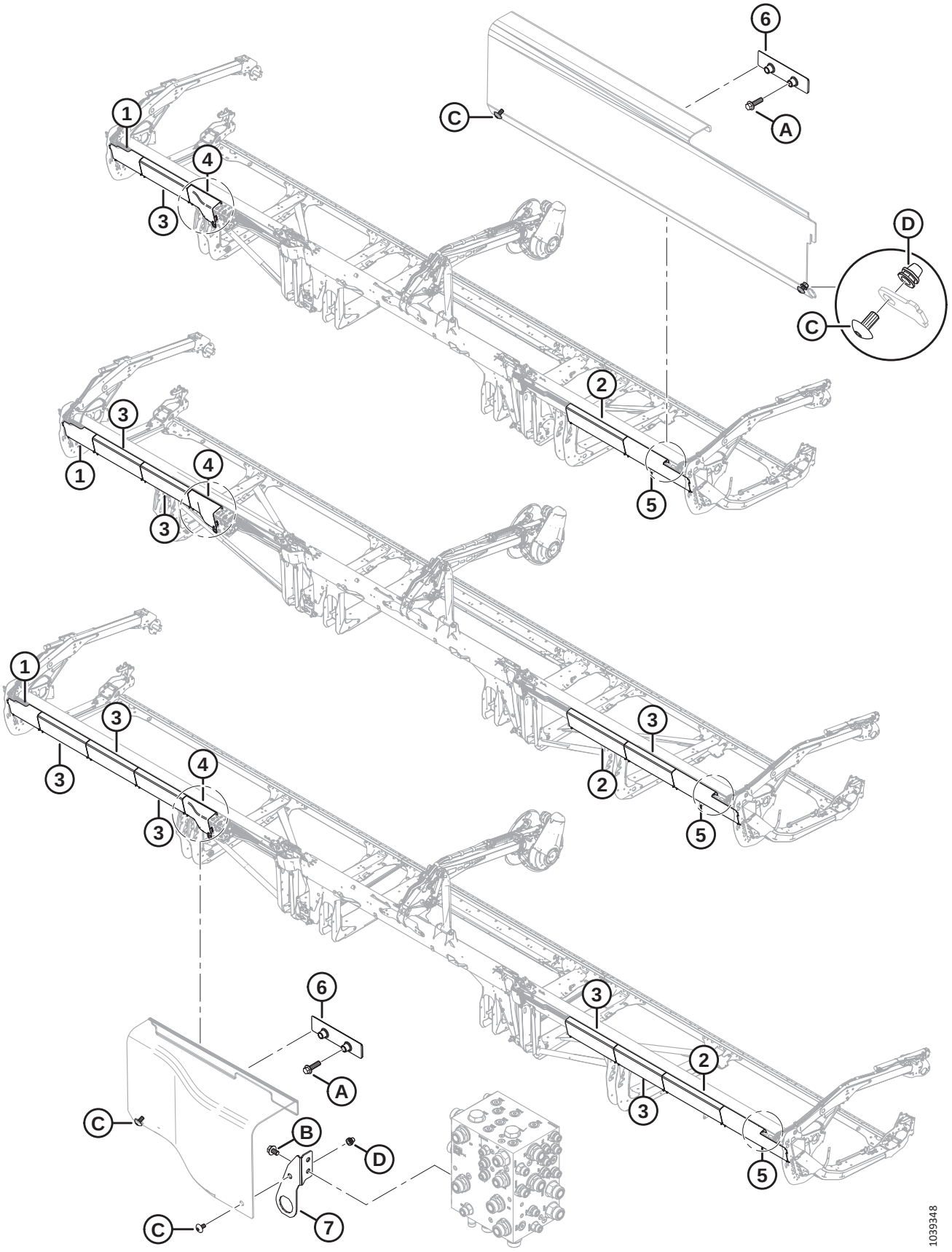

HYDRAULIC LINE COVERS (FD230, FD235, AND FD240)

Ref	Part Number	Description	Qty	Serial Number
1	323164	COVER – HYD LH END PLASTIC	1	
2	323172	COVER – HYD LONG PLASTIC [416]		
3	323169	COVER – HYD COMMON PLASTIC [417]		
4	323795	COVER – HYD MANIFOLD LH	1	
5	323166	COVER – HYD RH END PLASTIC	1	
6	283849	BRACKET – HYD COVER SUPPORT	2	
7	323772	ASSY – CONNECTOR BRACKET [418]	1	
A	136211	BOLT – HEX FLG HD M10 X 1.5 X 35-8.8-AA1J		
B	136151	BOLT – HEX FLG HD TFL M10 X 1.5 X 16-8.8-AA1J		
C	320336	SCREW – TORX TRUSS HD M8 X 1.25 X 16-SPCL-8.8-AA1T [419]		
D	320448	RIVNUT – M8 X 1.25 HEX		

416. Quantities: FD230 = 1, FD235 = 1, and FD240 = 1.
417. Quantities: FD230 = 1, FD235 = 3, and FD240 = 5.
418. The assembly includes cover mounting connector bracket (NSS) and rivnut (MD #320448). Model year 2022 and prior machines with superseded bracket (MD #311513) used M10 bolt (MD #152655) and M10 lock nut (MD #135799) to secure the LH hydraulic manifold cover to the connector bracket. For model year 2023 and later machines, or for machines that have been serviced with connector bracket assembly (MD #323772), order M8 screw (MD #320336).
419. Quantities: FD230 = 10, FD235 = 14, and FD240 = 18.

98 Hydraulic Line Covers (FD241, FD245, and FD250)

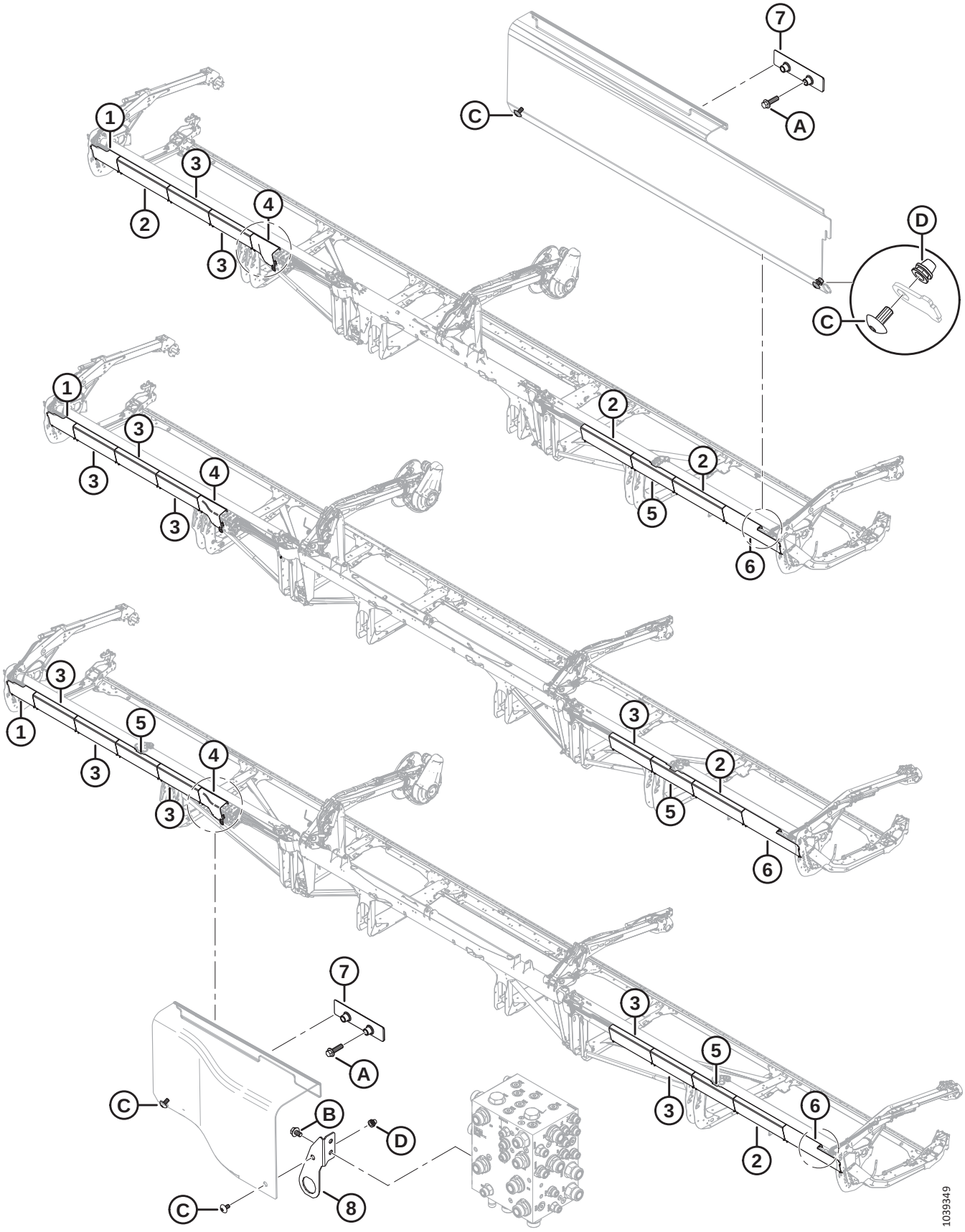

HYDRAULIC LINE COVERS (FD241, FD245, AND FD250)

Ref	Part Number	Description	Qty	Serial Number
1	323164	COVER – HYD LH END PLASTIC	1	
2	323172	COVER – HYD LONG PLASTIC [420]		
3	323169	COVER – HYD COMMON PLASTIC [421]		
4	323795	COVER – HYD MANIFOLD LH	1	
5	323165	COVER – HYD SPLIT PLASTIC [422]		
6	323166	COVER – HYD RH END PLASTIC	1	
7	283849	BRACKET – HYD COVER SUPPORT	2	
8	323772	ASSY – CONNECTOR BRACKET [423]	1	
A	136211	BOLT – HEX FLG HD M10 X 1.5 X 35-8.8-AA1J		
B	136151	BOLT – HEX FLG HD TFL M10 X 1.5 X 16-8.8-AA1J		
C	320336	SCREW – TORX TRUSS HD M8 X 1.25 X 16-SPCL-8.8-AA1T [424]		
D	320448	RIVNUT – M8 X 1.25 HEX		

420. Quantities: FD241 = 3, FD245 = 1, and FD250 = 3.
421. Quantities: FD241 = 2, FD245 = 4, and FD250 = 5.
422. Quantities: FD241 = 1, FD245 = 1, and FD250 = 2.
423. The assembly includes cover mounting connector bracket (NSS) and rivnut (MD #320448). Model year 2022 and prior machines with superseded bracket (MD #311513) used M10 bolt (MD #152655) and M10 lock nut (MD #135799) to secure the LH hydraulic manifold cover to the connector bracket. For model year 2023 and later machines, or for machines that have been serviced with connector bracket assembly (MD #323772), order M8 screw (MD #320336).
424. Quantities: FD241 = 18, FD245 = 18, and FD250 = 22.

99 Electrical – Harness (FD225)

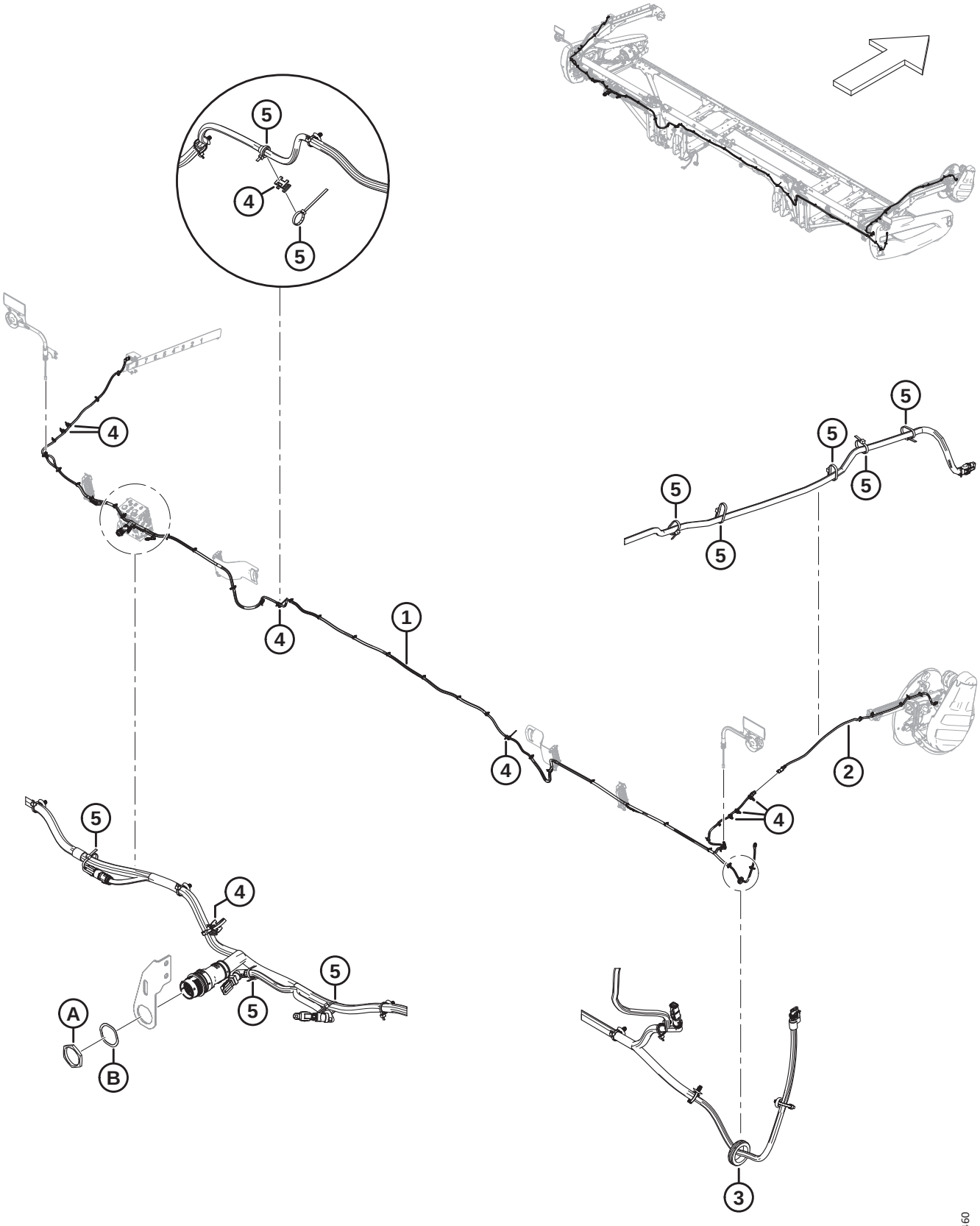

Ref	Part Number	Description	Qty	Serial Number
1	323381	HARNESS – MAIN 25 FT [425]	1	
2	323145	HARNESS – HDR EXT. REEL ARM	1	
3	323130	GROMMET – RUBBER	1	
4	134442	SPACER – DUAL SWIVEL SADDLE	8	
5	21763	FASTENER – CABLE TIE, BLACK, 160 MM LG	A/R	
A	134728	NUT – PANEL, HDP 20, SIZE 24		
B	134730	WASHER – LOCK, HDP 20, SIZE 24		

425. The harness comes complete with all fir tree fasteners (MD #136655) attached.

100 Electrical – Harness (FD230, FD235, FD240, FD241, FD245, and FD250)

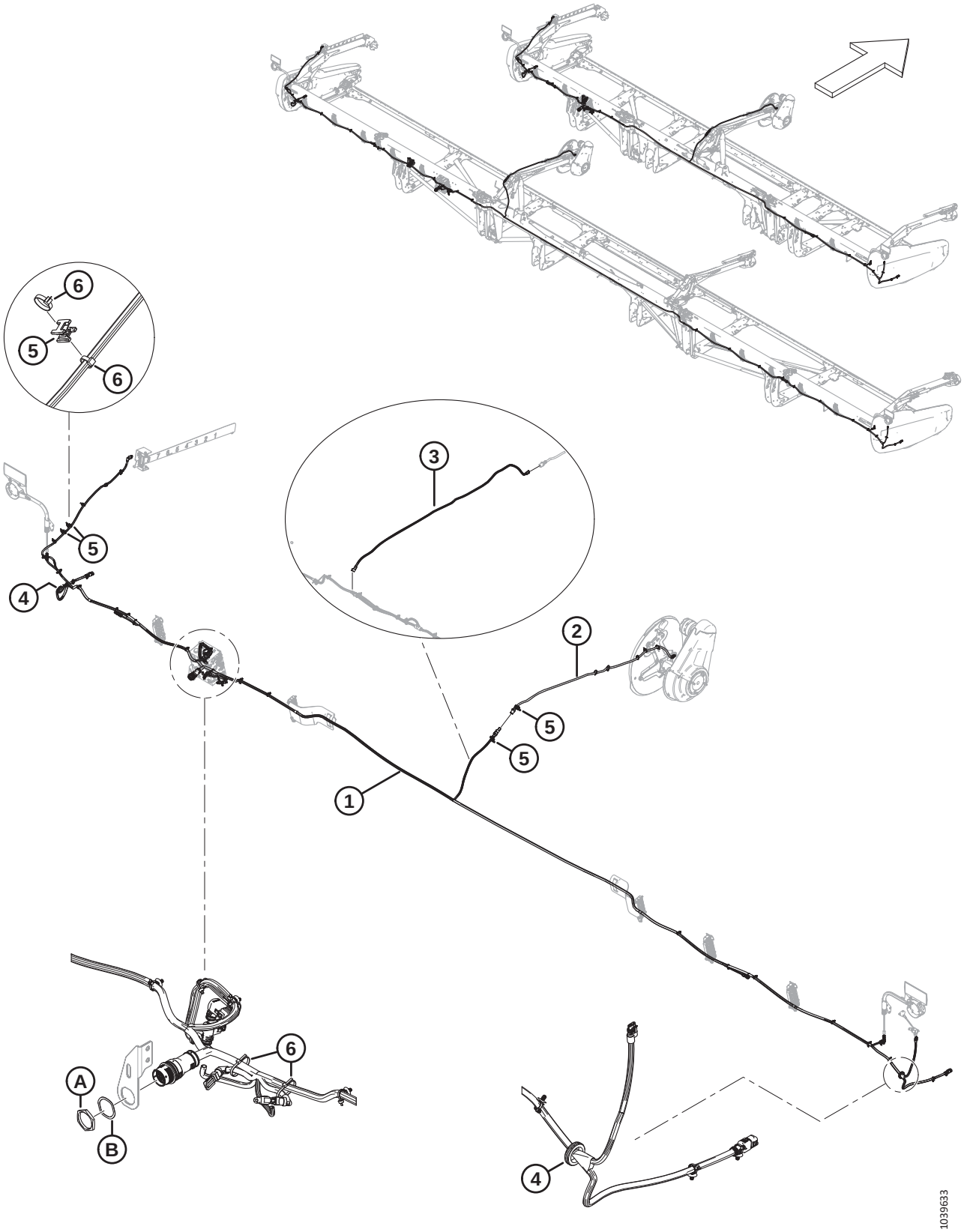

Ref	Part Number	Description	Qty	Serial Number
1	323207	HARNESS – MAIN 30 FT [426]	1	
	323208	HARNESS – MAIN 35 FT [426]	1	
	323210	HARNESS – MAIN 40 FT [426]	1	
	323209	HARNESS – MAIN 41 FT [426]	1	
	323211	HARNESS – MAIN 45 FT [426]	1	
	323212	HARNESS – MAIN 50 FT [426]	1	
	136655	FASTENER – FIR TREE MT W/ TIE	A/R	
2	323145	HARNESS – HDR EXT. REEL ARM	1	
3	323718	HARNESS – HDR EXT. REEL TR (2021/2022 FD240 TRIPLE REEL) [427]	1	
4	323130	GROMMET – RUBBER	2	
5	134442	SPACER – DUAL SWIVEL SADDLE	4	
6	21763	FASTENER – CABLE TIE, BLACK, 160 MM LG	A/R	
A	134728	NUT – PANEL, HDP 20, SIZE 24		
B	134730	WASHER – LOCK, HDP 20, SIZE 24		

426. The harness comes complete with all fir tree fasteners (MD #136655) attached.
427. Required only on model year 2021/2022 FD240 triple-reel headers; installed between the main harness and extension harness (MD #323145).

101 Electrical – Clearance Lights

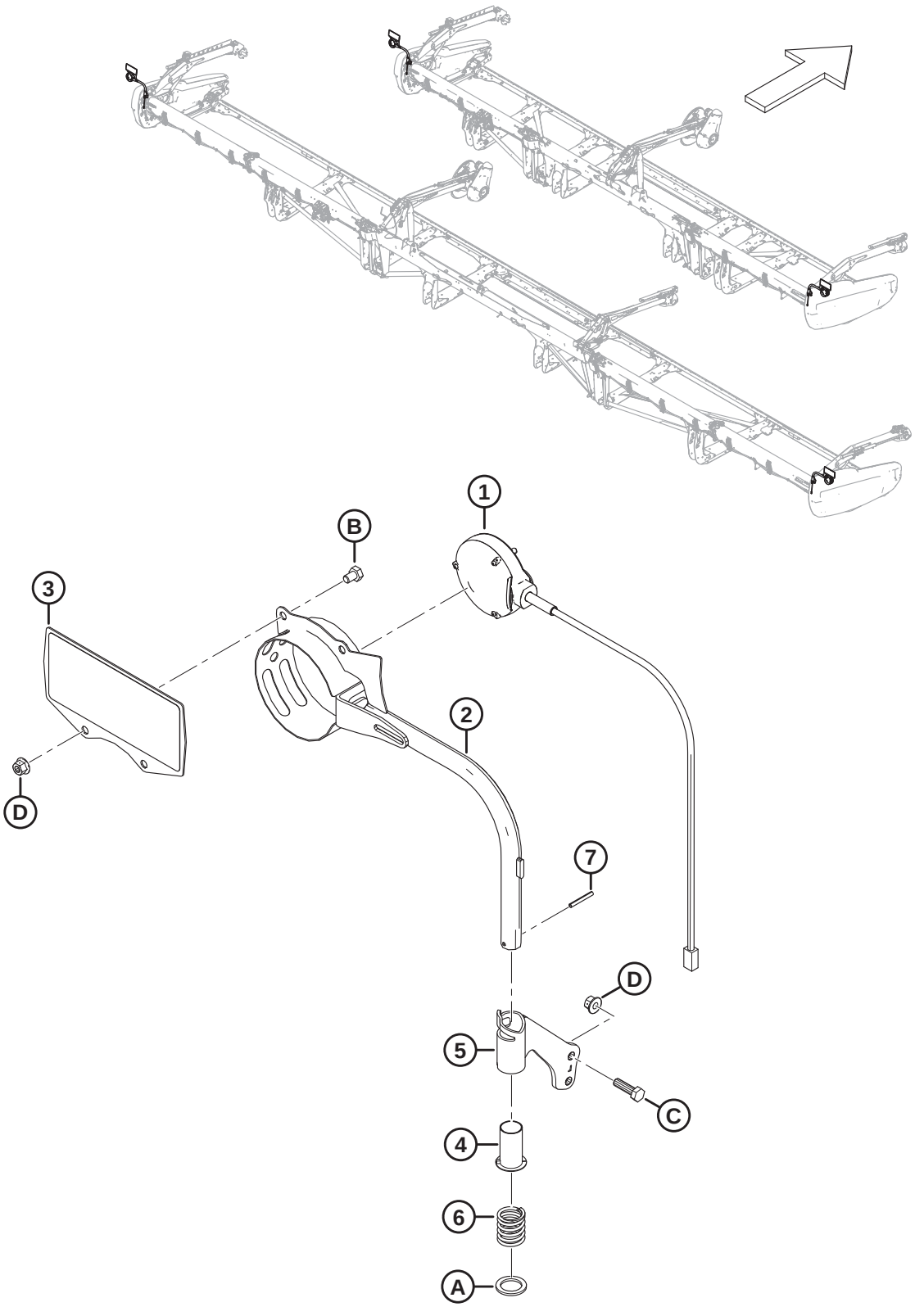

Ref	Part Number	Description	Qty	Serial Number
1	313940	LIGHT – MARKER, AMBER	2	
2	313192	WELDT – CLEARANCE LIGHT	2	
3	313643	ASSY – COMBINE REFLECTOR [428]	2	
4	233912	BUSHING	2	
5	233914	ASSY – LH TUBE MOUNT [429]	1	
	233913	ASSY – RH TUBE MOUNT [429]	1	
6	313064	SPRING – COMPRESSION	2	
7	7642	PIN – SPRING 3/16 DIA X 1.5 LG	2	
A	320248	WASHER – FLAT		
B	50071	BOLT – HEX HD TFL M10 X 1.5 X 15-8.8-AA1J		
C	30628	BOLT – HEX HD M10 X 1.5 X 35-8.8-AA1J		
D	135799	NUT – HEX FLG CTR LOC M10 X 1.5-10		

428. The reflector assembly includes two reflectors (MD #313730, MD #115146).
429. The tube mount assembly includes bushing (MD #233912).

102 Electrical – Reel Height Sensor

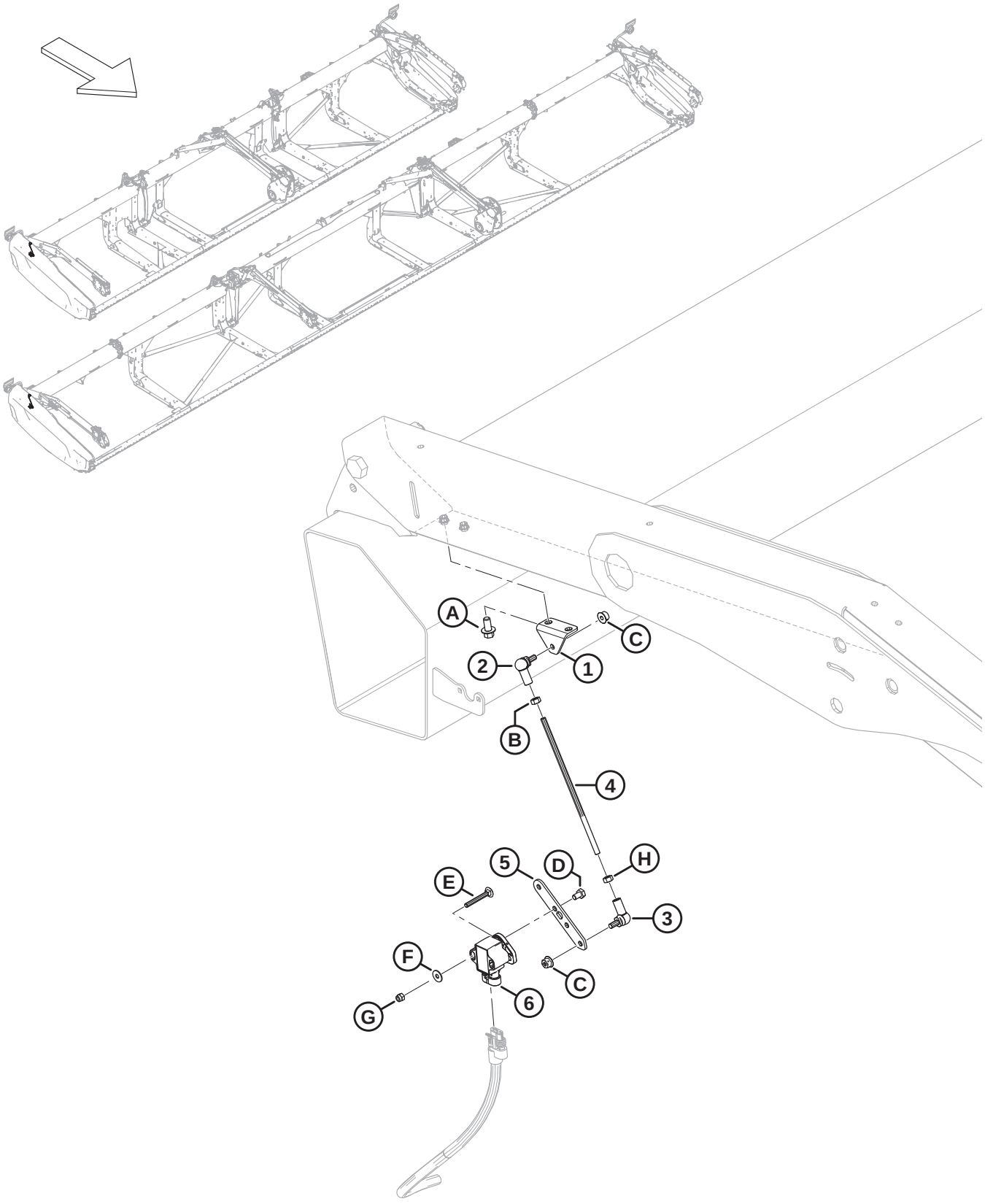

Ref	Part Number	Description	Qty	Serial Number
1	251881	BRACKET	1	
2	291484	BALL JOINT – RH THREAD	1	
3	291485	BALL JOINT – LH THREAD	1	
4	232676	ROD – THREADED	1	
5	251879	ARM – FLOAT SENSOR	1	
6	248643	ROTARY SENSOR – DUAL OUTPUT	1	
A	136485	BOLT – HEX FLG HD TFL M8 X 1.25 X 16-8.8-AA1J		
B	184683	NUT – HEX ISO 4032 M6 X 1-8-ZINC		
C	152668	NUT – HEX FLG CTR LOC M6 X 1-8		
D	136561	BOLT – HEX HD TFL M6 X 1 X 10-8.8-AA1J		
E	136604	BOLT – RHSN TFL M5 X 0.8 X 40-8.8-AA1J		
F	184701	WASHER – FLAT LARGE M5-200HV		
G	197230	NUT – HEX NYLOC M5 X 0.8-8-AA1J		
H	136613	NUT – HEX LH ISO 4032 M6 X 1-8 ZINC		

103 Electrical – Reel Fore-Aft Sensor (2023 and Prior)

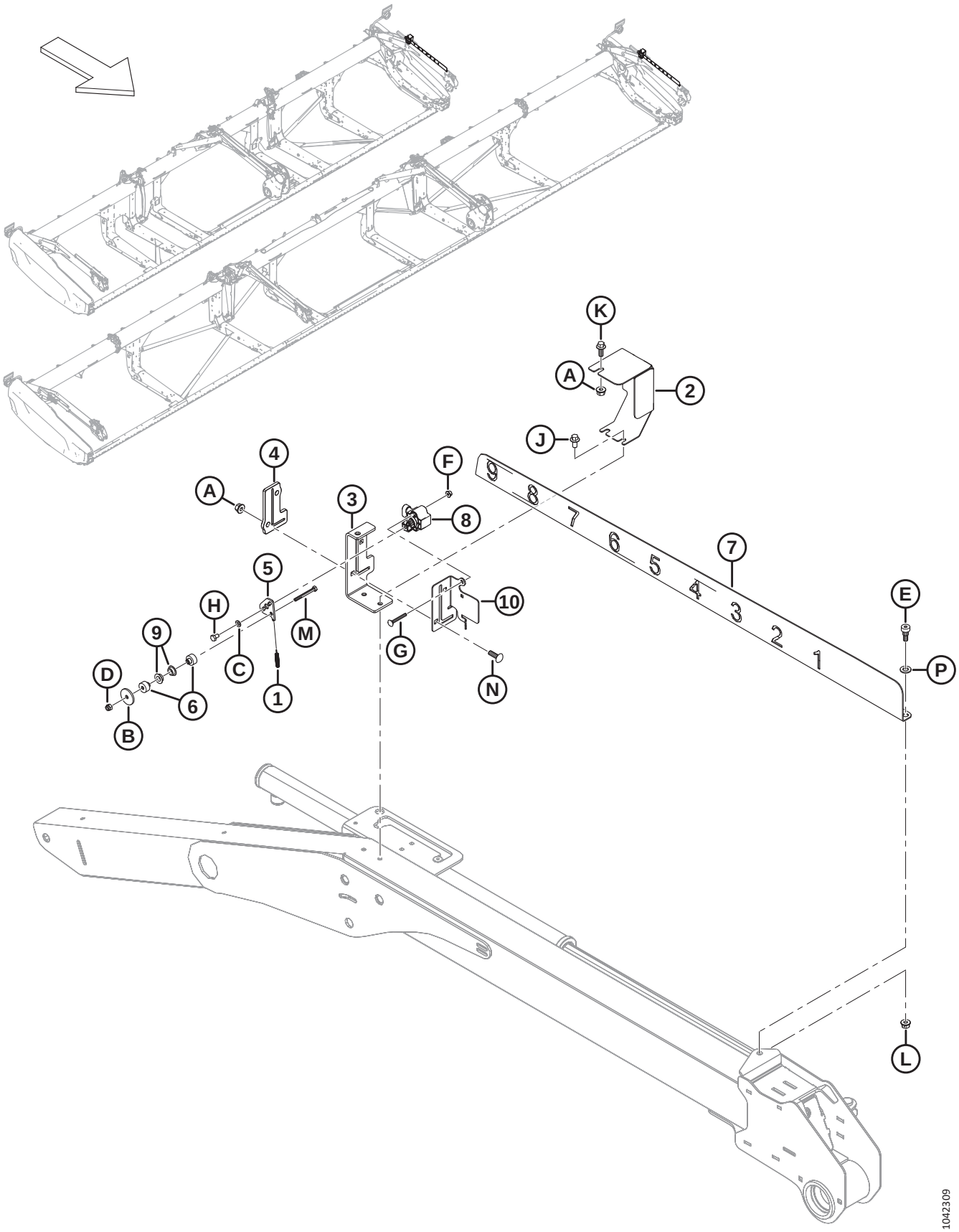

NOTE:

Unless otherwise stated, the parts and hardware listed in this section are used to service units made in model year 2023 and prior.

Ref	Part Number	Description	Qty	Serial Number
1	328556	SPRING – EXTENSION [430]	1	–486189
2	328547	COVER – F/A SENSOR [431]	1	–486189
3	340218	SUPPORT – REEL F/A INDICATOR [431]	1	–486189
4	311318	GUIDE – REEL F/A [431]	1	–486189
5	328539	ARM – F/A SENSOR [430]	1	–486189
6	328534	SPACER – SENSOR BUSHING [430]	2	–486189
7	323937	INDICATOR – REEL F/A [431]	1	–486189
8	248643	ROTARY SENSOR – DUAL OUTPUT	1	–486189
9	206340	BUSHING – SHOULDER, M10	2	–486189
10	340183	PLATE – SENSOR SUPPORT [431]	1	–486189
A	135337	NUT – HEX FLG CTR LK M8 X 1.25-8-AA1J		
B	43219	WASHER – FLAT		
C	184705	WASHER – FLAT M6-200HV-AA1J		
D	184685	NUT – HEX NYLOC M6 X 1-8-AA1J		
E	135894	SCREW – HEX SOC HD SHLDR M10		
F	136635	NUT – HEX FLG CTR LOC M5 X 0.8-8-AA1J		
G	197229	BOLT – RHSN TFL M5 X 0.8 X 35-4.6-AA1J		
H	136561	BOLT – HEX HD TFL M6 X 1 X 10-8.8-AA1J		
J	136485	BOLT – HEX FLG HD TFL M8 X 1.25 X 16-8.8-AA1J		
K	136300	BOLT – HEX FLG HD TFL M8 X 1.25 X 20-8.8-AA3L		
L	135337	NUT – HEX FLG CTR LK M8 X 1.25-8-AA1J		
M	136595	BOLT – HEX HD M6 X 1 X 55-8.8		
N	136824	BOLT – RHSSN M8 X 1.25 X 25-8.8-AA1J		
P	184711	WASHER – FLAT REG M10-200HV-AA1J		

430. Service part only for model year 2023 and prior units.

431. Superseded by Reel Fore-Aft Sensor kit (MD #368338) for model year 2024. For service parts, refer to Section *104 Electrical – Reel Fore-Aft Sensor (2024 and Later), page 251*.

104 Electrical – Reel Fore-Aft Sensor (2024 and Later)

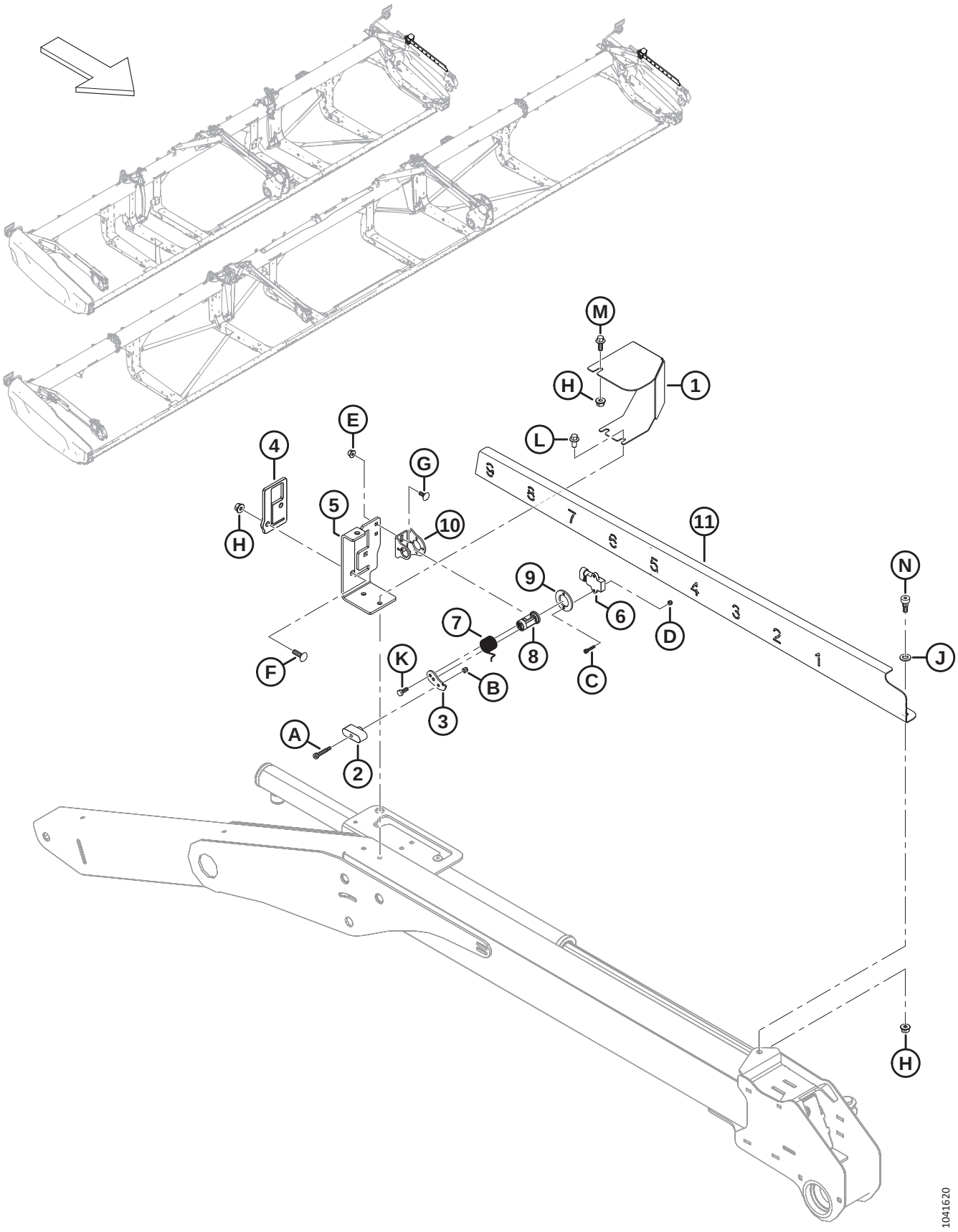

Ref	Part Number	Description	Qty	Serial Number
	368338	KIT – FORE AFT SENSOR [432]	A/R	
1	368239	COVER – FORE AFT SENSOR	1	486190–
2	360840	SLIDER – FORE/AFT	1	486190–
3	340956	ARM – SENSOR	1	486190–
4	360828	GUIDE – REEL F/A	1	486190–
5	360824	SUPPORT – REEL F/A INDICATOR	1	486190–
6	500303	SENSOR – ROTARY DUAL CONTACTLESS	1	486190–
7	360212	SPRING – TORSION	1	486190–
8	352163	ASSY – SENSOR PIVOT	1	486190–
9	352001	SPACER – SENSOR	1	486190–
10	340955	SUPPORT – SENSOR	1	486190–
11	360823	INDICATOR – REEL F/A	1	486190–
A	320409	SCREW – HEX SOC HD SHLDR 6 X 25-M5 X 0.8 X 9.5-12.9-ZINC		
B	197230	NUT – HEX NYLOC M5 X 0.8-8-AA1J		
C	320410	SCREW – HEX SOC HD M4 X 0.7 X 20-A2SS		
D	320390	NUT – HEX NYLOC M4 X 0.7-8-A2-SS		
E	152668	NUT – HEX FLG CTR LOC M6 X 1-8		
F	136824	BOLT – RHSSN M8 X 1.25 X 25-8.8-AA1J		
G	136748	BOLT – RHSN M6 X 1 X 16-8.8-ZINC		
H	135337	NUT – HEX FLG CTR LK M8 X 1.25-8-AA1J		
J	184711	WASHER – FLAT REG M10-200HV-AA1J		
K	184642	BOLT – HEX HD TFL M6 X 1 X 16-8.8-AA1J		
L	136485	BOLT – HEX FLG HD TFL M8 X 1.25 X 16-8.8-AA1J		
M	136300	BOLT – HEX FLG HD TFL M8 X 1.25 X 20-8.8-AA3L		
N	135894	SCREW – HEX SOC HD SHLDR M10		

432. The Fore-Aft Sensor kit (MD #368338) is used to upgrade model year 2023 and prior units to the model year 2024 reel fore-aft sensor design. The kit includes all parts and hardware listed in this section, and instructions.

105 Electrical – Reel Speed Sensor, AGCO and CLAAS

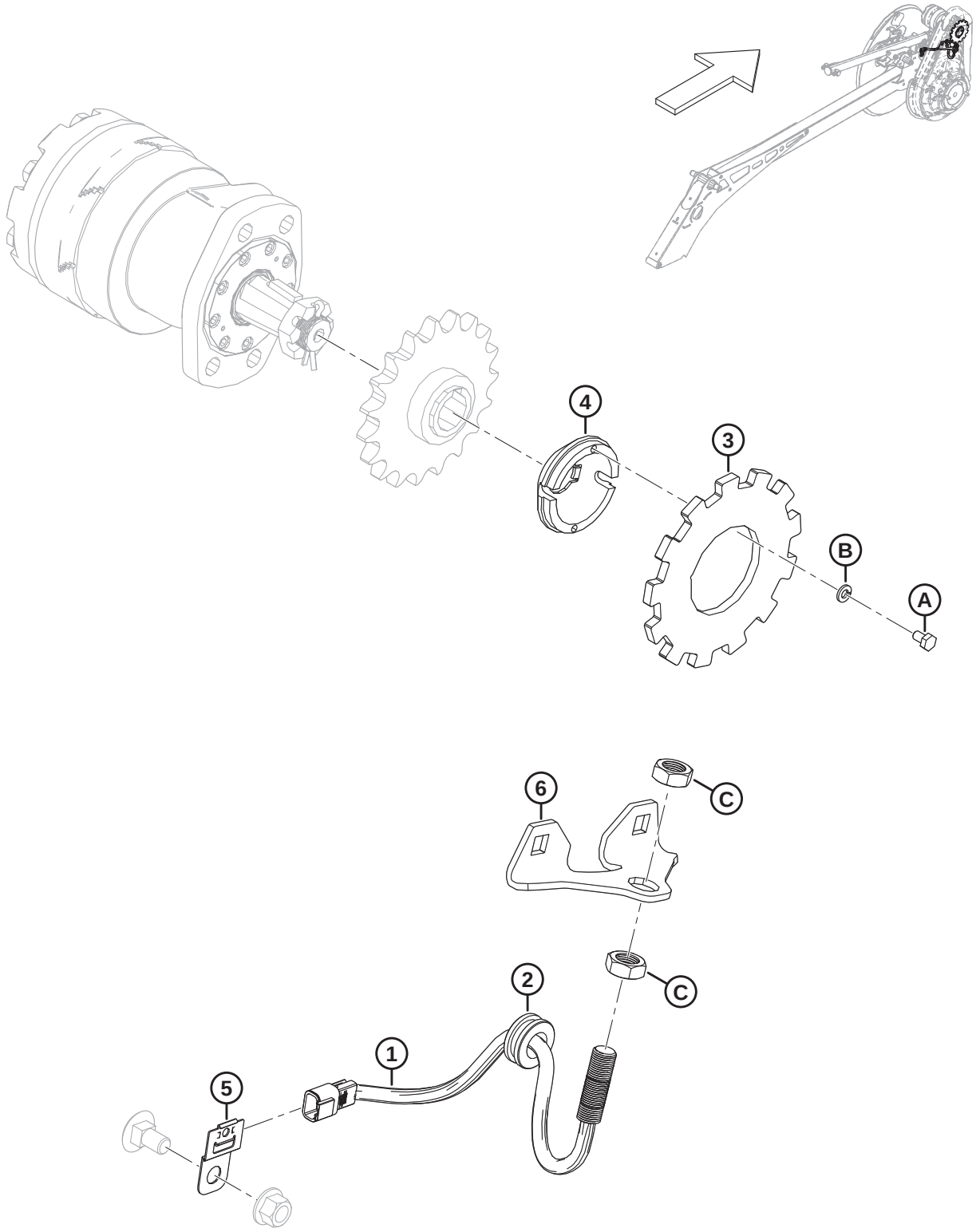

1034891

NOTE:

13-tooth reel speed sensor option (B7065) shown, 65-tooth reel speed sensor option (B7064) is similar.

Ref	Part Number	Description	Qty	Serial Number
	B7065	KIT – REEL SPEED SENSOR 13T [433]		
	B7064	KIT – REEL SPEED SENSOR 65T [434]		
1	136167	SENSOR – SPEED [435]	1	
	328329	SENSOR – SPEED MODIFIED [436]	1	
2	273032	GROMMET – 3/4 IN. I.D. 1-3/8 IN. O.D.	1	
3	228473	DISC – 13T REEL SPEED SENSOR [437]	1	
	228471	DISC – 65T REEL SPEED SENSOR [438]	1	
4	228470	HUB – SENSOR	1	
5	500321	CLIP – DEUTSCH, DT, SIDE MOUNT	1	
6	328662	SUPPORT – REEL SPEED SENSOR	1	
A	136561	BOLT – HEX HD TFL M6 X 1 X 10-8.8-AA1J		
B	30631	WASHER – LOCK SPRING M6		
C	7674	NUT – HEX JAM 3/4-16 UNF GR5 AA1J		

433. 13-Tooth Reel Speed Sensor kit (B7065) is used for CLAAS combines, and Challenger®, Massey Ferguson®, and IDEAL™ Series combines only. Kits are available through Whole Goods only.
434. 65-Tooth Reel Speed Sensor kit (B7064) is used for Gleaner® Combines only. Kits are available through Whole Goods only.
435. Speed sensor (MD #136167) is used in 13-Tooth Reel Speed Sensor kit (B7065). The speed sensor includes hex jam nuts (NSS).
436. Speed sensor (MD #328329) is used in 65-Tooth Reel Speed Sensor kit (B7064).
437. 13-tooth disc (MD #228473) is used in 13-Tooth Reel Speed Sensor kit (B7065).
438. 65-tooth disc (MD #228471) is used in 65-Tooth Reel Speed Sensor kit (B7064).

106 Electrical – Reel Speed Sensor, John Deere

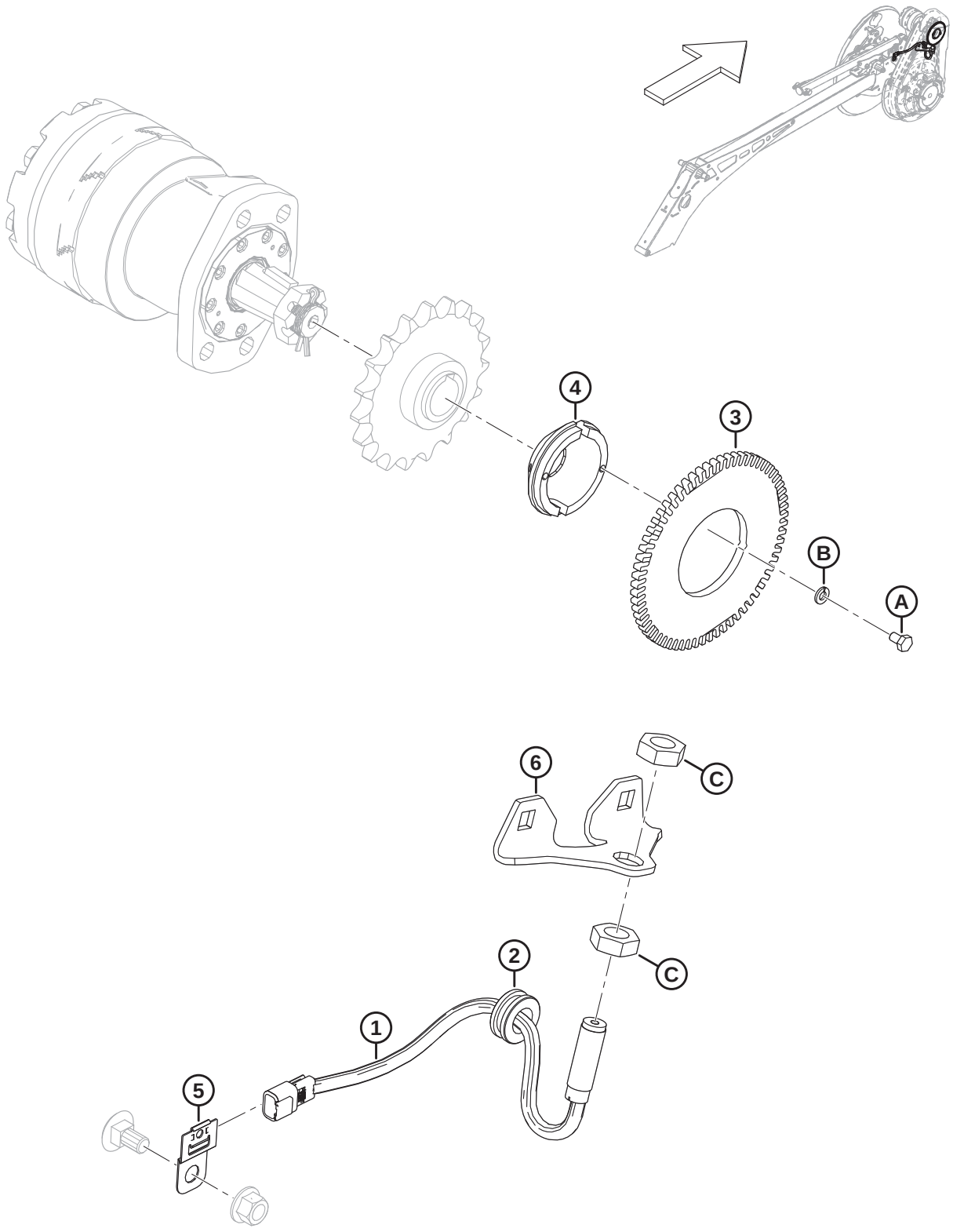

NOTE:

65-tooth reel speed sensor option (B7064) shown, 13-tooth reel speed sensor option (B7065) is similar.

Ref	Part Number	Description	Qty	Serial Number
	B7064	KIT – REEL SPEED SENSOR 65T [439]		
	B7065	KIT – REEL SPEED SENSOR 13T [440]		
1	328329	SENSOR – SPEED MODIFIED [441]	1	
	136167	SENSOR – SPEED [442]	1	
2	273032	GROMMET – 3/4 IN. I.D. 1-3/8 IN. O.D.	1	
3	228471	DISC – 65T REEL SPEED SENSOR [443]	1	
	228473	DISC – 13T REEL SPEED SENSOR [444]	1	
4	228470	HUB – SENSOR	1	
5	500321	CLIP – DEUTSCH, DT, SIDE MOUNT	1	
6	328662	SUPPORT – REEL SPEED SENSOR	1	
A	136561	BOLT – HEX HD TFL M6 X 1 X 10-8.8-AA1J		
B	30631	WASHER – LOCK SPRING M6		
C	7674	NUT – HEX JAM 3/4-16 UNF GR5 AA1J		

439. 65-Tooth Reel Speed Sensor kit (B7064) is used for John Deere S and T Series combines only. Kits are available through Whole Goods only.
440. 13-Tooth Reel Speed Sensor kit (B7065) is used for John Deere X9 Series combines only. Kits are available through Whole Goods only.
441. Speed sensor (MD #328329) is used in 65-Tooth Reel Speed Sensor kit (B7064).
442. Speed sensor (MD #136167) is used in 13-Tooth Reel Speed Sensor kit (B7065). The speed sensor includes hex jam nuts (NSS).
443. 65-tooth disc (MD #228471) is used in 65-Tooth Reel Speed Sensor kit (B7064).
444. 13-tooth disc (MD #228473) is used in 13-Tooth Reel Speed Sensor kit (B7065).

107 Electrical – Reel Speed Sensor, Rostselmash

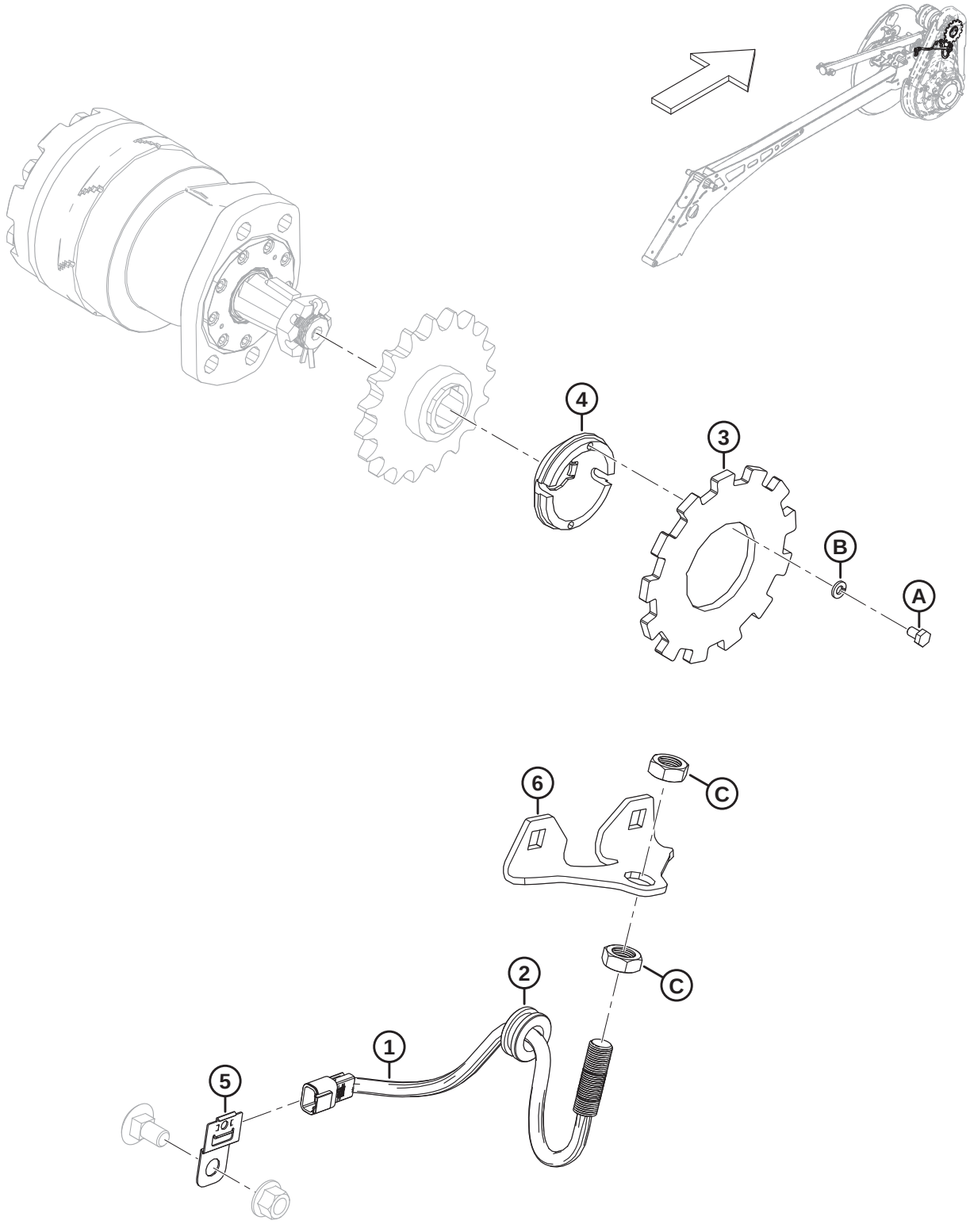

1039514

Ref	Part Number	Description	Qty	Serial Number
	B7408	KIT – REEL SPEED SENSOR SPCL 13T [445]		
1	328329	SENSOR – SPEED MODIFIED	1	
2	273032	GROMMET – 3/4 IN. I.D. 1-3/8 IN. O.D.	1	
3	228473	DISC – 13T REEL SPEED SENSOR	1	
4	228470	HUB – SENSOR	1	
5	500321	CLIP – DEUTSCH, DT, SIDE MOUNT	1	
6	328662	SUPPORT – REEL SPEED SENSOR	1	
A	136561	BOLT – HEX HD TFL M6 X 1 X 10-8.8-AA1J		
B	30631	WASHER – LOCK SPRING M6		
C	7674	NUT – HEX JAM 3/4-16 UNF GR5 AA1J		

445. Kits are available through Whole Goods only.

108 Decals and Reflectors – FD2 Series

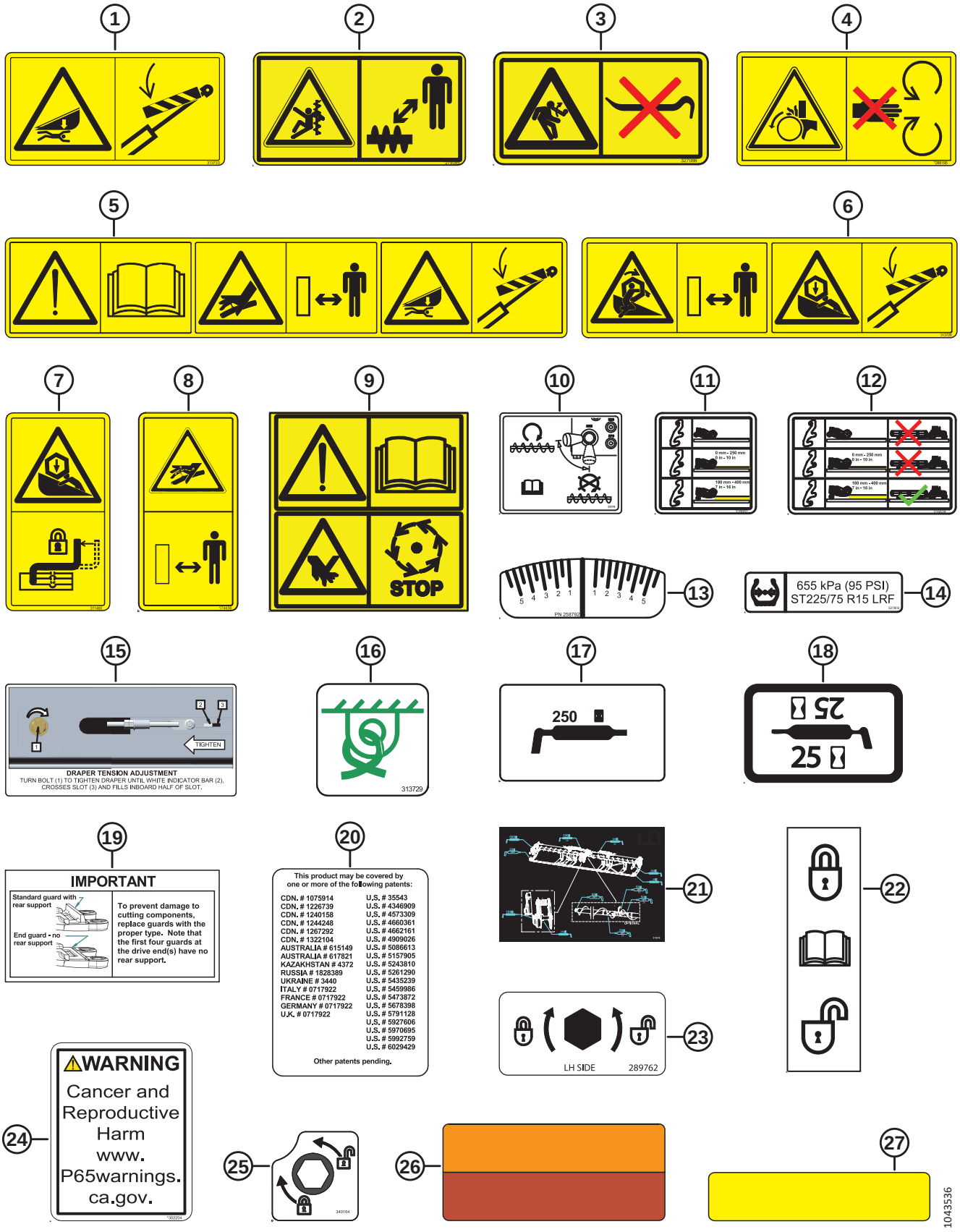

Ref	Part Number	Description	Qty	Serial Number
1	313733	DECAL – HEADER HAZARD		
2	279085	DECAL – WARNING, AUGER		
3	327086	DECAL – ENERGY RELEASE		
4	288195	DECAL – ROTATING PART		
5	313725	DECAL – MANUAL/HPF/HAZARD		
6	360541	DECAL – REEL ENTANGLEMENT/HAZARD		
7	311493	DECAL – CENTER REEL PROP LOCK		
8	174436	DECAL – HIGH PRESSURE FLUID		
9	313881	DECAL – VERTICAL KNIFE HAZARD		
10	233745	DECAL – UCA VALVE		
11	316662	DECAL – HEIGHT SETTING [446]		
12	316639	DECAL – HEIGHT SETTING, RH		
	316649	DECAL – HEIGHT SETTING, LH		
13	258792	DECAL – FLEX CHECKER		
14	327802	DECAL – TIRE PRESSURE, 655 KPA (95 PSI) [447]		
	327717	DECAL – TIRE PRESSURE, 552 KPA (80 PSI) [448]		
15	279528	DECAL – RH DRAPER TENSION		
	220084	DECAL – LH DRAPER TENSION		
16	313729	DECAL – TIE DOWN		
17	323516	DECAL – GREASE (250 HRS)		
18	23164	DECAL – 25 HR LUBE		
	23165	DECAL – 50 HR LUBE		
	115759	DECAL – GREASE 100 HR		
19	129313	DECAL – IMPORTANT: GUARDS		
20	32070	DECAL – PATENT NUMBER		
21	313510	DECAL – GREASE, FLX, DR, 2PC AUGER		
	313920	DECAL – GREASE, FLX, TR, 3PC AUGER		
22	165218	DECAL – WING LOCKOUT		
23	289762	DECAL – DIVIDER LATCH-LH		
	289763	DECAL – DIVIDER LATCH-RH		
24	302204	DECAL – CA PROPOSITION 65		
25	340164	DECAL – CAM LATCH		
26	313787	REFLECTOR – RED/ORANGE, 230 MM [449]		
	313730	REFLECTOR – RED/ORANGE, 230 MM (CLEARANCE LIGHTS) [450]		
27	115146	REFLECTOR – AMBER, 230 MM		
	273440	REFLECTOR – AMBER, 655 MM (8 IN. CENTER TUBE) [451]		
	165524	REFLECTOR – RED, 230 MM [452]		

446. The decal is used for the stabilizer wheels option.
447. Tire pressure decal MD #327802 (655 kPa [95 psi]) is used with tire MD #327808.
448. Tire pressure decal MD #327717 (552 kPa [80 psi]) remains available as a service part for superseded tire MD #230483.
449. The reflector is used for plastic/PVC surfaces.
450. The reflector is used for metal surfaces.
451. The reflector is used on the reel center tubes.
452. The reflector is used on the right header endshield.

109 Decals – Product Identification

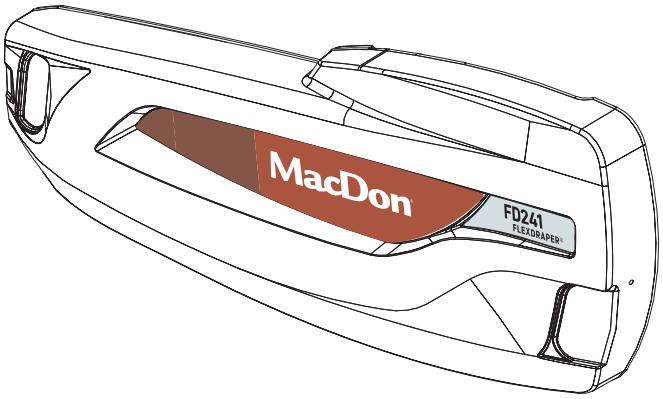

1

MacDon®

2

FD225
FLEXDRAPER®

3

FD230
FLEXDRAPER®

4

FD235
FLEXDRAPER®

5

FD240
FLEXDRAPER®

6

FD241
FLEXDRAPER®

7

FD245
FLEXDRAPER®

8

FD250
FLEXDRAPER®

9

FFT FLEX-FLOAT TECHNOLOGY™

1039290

Ref	Part Number	Description	Qty	Serial Number
1	313421	DECAL – MACDON RED, LH	1	
	313422	DECAL – MACDON RED, RH	1	
	313554	DECAL – MACDON GREEN, LH	1	
	313555	DECAL – MACDON GREEN, RH	1	
	313580	DECAL – MACDON YELLOW, LH	1	
	313581	DECAL – MACDON YELLOW, RH	1	
	313574	DECAL – MACDON GREY, LH	1	
	313575	DECAL – MACDON GREY, RH	1	
2	340304	DECAL – FD225 MODEL NUMBER, LH	1	
	340305	DECAL – FD225 MODEL NUMBER, RH	1	
3	313541	DECAL – FD230 MODEL NUMBER, LH	1	
	313542	DECAL – FD230 MODEL NUMBER, RH	1	
4	313543	DECAL – FD235 MODEL NUMBER, LH	1	
	313544	DECAL – FD235 MODEL NUMBER, RH	1	
5	313545	DECAL – FD240 MODEL NUMBER, LH	1	
	313546	DECAL – FD240 MODEL NUMBER, RH	1	
6	313547	DECAL – FD241 MODEL NUMBER, LH	1	
	313548	DECAL – FD241 MODEL NUMBER, RH	1	
7	313549	DECAL – FD245 MODEL NUMBER, LH	1	
	313550	DECAL – FD245 MODEL NUMBER, RH	1	
8	313551	DECAL – FD250 MODEL NUMBER, LH	1	
	313552	DECAL – FD250 MODEL NUMBER, RH	1	
9	245093	DECAL – FFT (FLEX-FLOAT TECHNOLOGY)	1	

110 Decals – Product Identification, Case

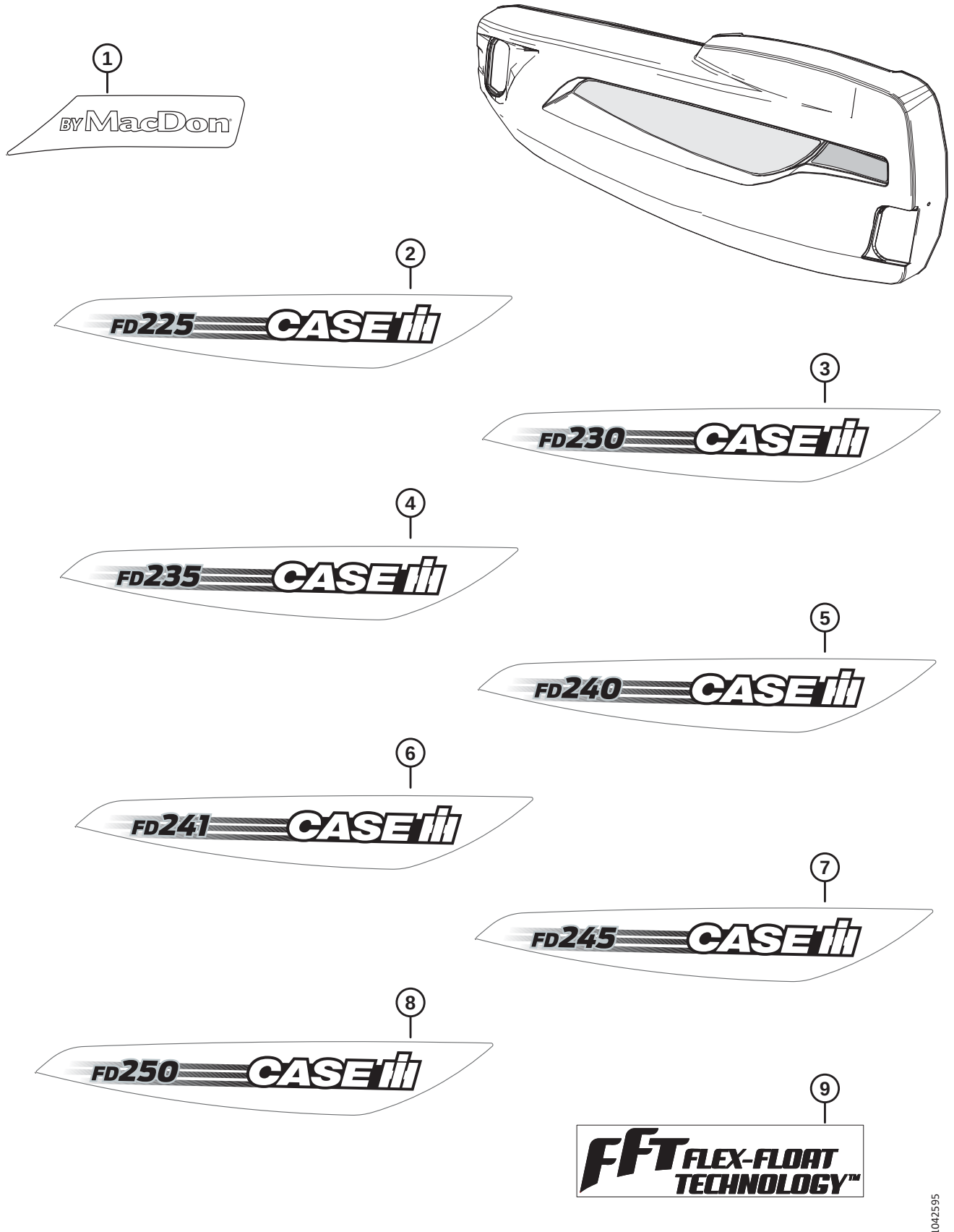

Ref	Part Number	Description	Qty	Serial Number
1	368422	DECAL – BY MACDON CIH CLEAR, LH [453]	1	
	368423	DECAL – BY MACDON CIH CLEAR, RH [454]	1	
2	368398	DECAL – FD225 CIH, LH [455]	1	
	368399	DECAL – FD225 CIH, RH [456]	1	
3	368400	DECAL – FD230 CIH, LH [457]	1	
	368401	DECAL – FD230 CIH, RH [458]	1	
4	368402	DECAL – FD235 CIH, LH [459]	1	
	368403	DECAL – FD235 CIH, RH [460]	1	
5	368404	DECAL – FD240 CIH, LH [461]	1	
	368405	DECAL – FD240 CIH, RH [462]	1	
6	368406	DECAL – FD241 CIH, LH [463]	1	
	368407	DECAL – FD241 CIH, RH [464]	1	
7	368408	DECAL – FD245 CIH, LH [465]	1	
	368409	DECAL – FD245 CIH, RH [466]	1	
8	368410	DECAL – FD250 CIH, LH [467]	1	
	368411	DECAL – FD250 CIH, RH [468]	1	

453. Left CIH red decal MD #360419 superseded by left CIH clear decal MD #368422. Order decal MD #360419 until stock is depleted, then order decal MD #368422.
454. Right CIH red decal MD #360420 superseded by right CIH clear decal MD #368423. Order decal MD #360420 until stock is depleted, then order decal MD #368423.
455. Left FD225 CIH decal MD #360391 superseded by left FD225 CIH decal MD #368398. Order decal MD #360391 until stock is depleted, then order decal MD #368398.
456. Right FD225 CIH decal MD #360392 superseded by right FD225 CIH decal MD #368399. Order decal MD #360392 until stock is depleted, then order decal MD #368399.
457. Left FD230 CIH decal MD #360393 superseded by left FD230 CIH decal MD #368400. Order decal MD #360393 until stock is depleted, then order decal MD #368400.
458. Right FD230 CIH decal MD #360394 superseded by right FD230 CIH decal MD #368401. Order decal MD #360394 until stock is depleted, then order decal MD #368401.
459. Left FD235 CIH decal MD #360395 superseded by left FD235 CIH decal MD #368402. Order decal MD #360395 until stock is depleted, then order decal MD #368402.
460. Right FD235 CIH decal MD #360396 superseded by right FD235 CIH decal MD #368403. Order decal MD #360396 until stock is depleted, then order decal MD #368403.
461. Left FD240 CIH decal MD #360397 superseded by left FD240 CIH decal MD #368404. Order decal MD #360397 until stock is depleted, then order decal MD #368404.
462. Right FD240 CIH decal MD #360398 superseded by right FD240 CIH decal MD #368405. Order decal MD #360398 until stock is depleted, then order decal MD #368405.
463. Left FD241 CIH decal MD #360399 superseded by left FD241 CIH decal MD #368406. Order decal MD #360399 until stock is depleted, then order decal MD #368406.
464. Right FD241 CIH decal MD #360400 superseded by right FD241 CIH decal MD #368407. Order decal MD #360400 until stock is depleted, then order decal MD #368407.
465. Left FD241 CIH decal MD #360401 superseded by left FD241 CIH decal MD #368408. Order decal MD #360401 until stock is depleted, then order decal MD #368408.
466. Right FD245 CIH decal MD #360402 superseded by right FD245 CIH decal MD #368409. Order decal MD #360402 until stock is depleted, then order decal MD #368409.
467. Left FD250 CIH decal MD #360403 superseded by left FD250 CIH decal MD #368410. Order decal MD #360403 until stock is depleted, then order decal MD #368410.
468. Right FD250 CIH decal MD #360404 superseded by right FD250 CIH decal MD #368411. Order decal MD #360404 until stock is depleted, then order decal MD #368411.

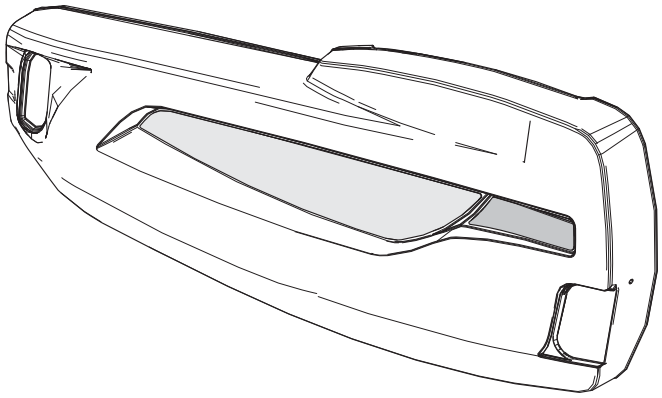

1. BY MacDon
2. FD225 CASE IH
3. FD230 CASE IH
4. FD235 CASE IH
5. FD240 CASE IH
6. FD241 CASE IH
7. FD245 CASE IH
8. FD250 CASE IH
9. FFT FLEX-FLOAT TECHNOLOGY™

1042595

DECALS – PRODUCT IDENTIFICATION, CASE

Ref	Part Number	Description	Qty	Serial Number
9	245093	DECAL – FFT (FLEX-FLOAT TECHNOLOGY)	1	

111 Decals – Product Identification, New Holland

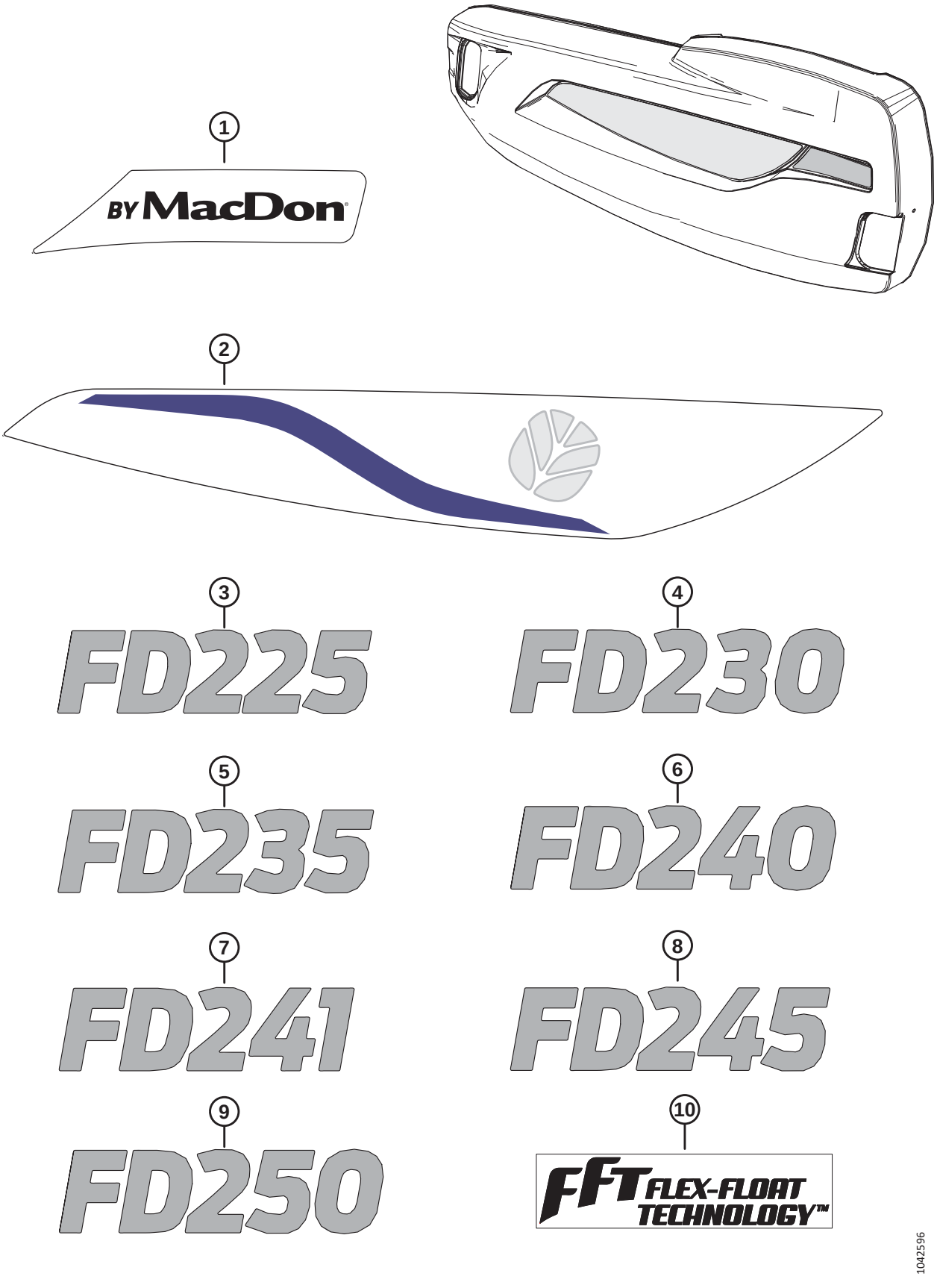

Ref	Part Number	Description	Qty	Serial Number
1	368424	DECAL – BY MACDON NH CLEAR, LH [469]	1	
	368425	DECAL – BY MACDON NH CLEAR, RH [470]	1	
2	368386	DECAL – NH, LH [471]	1	
	368394	DECAL – NH, RH [472]	1	
3	360405	DECAL – FD225 NH MODEL NBR	1	
4	360406	DECAL – FD230 NH MODEL NBR	1	
5	360407	DECAL – FD235 NH MODEL NBR	1	
6	360408	DECAL – FD240 NH MODEL NBR	1	
7	360409	DECAL – FD241 NH MODEL NBR	1	
8	360410	DECAL – FD245 NH MODEL NBR	1	
9	360411	DECAL – FD250 NH MODEL NBR	1	
10	245093	DECAL – FFT (FLEX-FLOAT TECHNOLOGY)	1	

469. Left NH yellow decal MD #360421 superseded by left NH clear decal MD #368424. Order decal MD #360421 until stock is depleted, then order decal MD #368424.
470. Right NH yellow decal MD #360422 superseded by right NH clear decal MD #368425. Order decal MD #360422 until stock is depleted, then order decal MD #368425.
471. Left NH yellow decal MD #360446 superseded by left NH decal MD #368386. Order decal MD #360446 until stock is depleted, then order decal MD #368386.
472. Right NH yellow decal MD #360447 superseded by right NH decal MD #368394. Order decal MD #360447 until stock is depleted, then order decal MD #368394.

112 Decals – French

1

2

3

4

1036707

DECALS – FRENCH

Ref	Part Number	Description	Qty	Serial Number
1	340049	DECAL – OIL, IMPORTANT, FRENCH		
2	245433	DECAL – IMPORTANT: GUARDS, FRENCH		
3	245432	DECAL – RH DRAPER TENSION, FRENCH		
4	245428	DECAL – LH DRAPER TENSION, FRENCH		

113 Decals – Portuguese

1

2

3

4

1036719

DECALS – PORTUGUESE

Ref	Part Number	Description	Qty	Serial Number
1	340051	DECAL – OIL, IMPORTANT, PORTUGUESE		
2	220817	DECAL – IMPORTANT: GUARDS, PORTUGUESE		
3	220836	DECAL – RH DRAPER TENSION, PORTUGUESE		
4	220824	DECAL – LH DRAPER TENSION, PORTUGUESE		

114 Decals – Russian

РЕГУЛИРОВКА НАТЯЖЕНИЯ ПОЛОТНА
ПОВОРАЧИВАЙТЕ БОЛТ (1) ДЛЯ НАТЯЖЕНИЯ ПОЛОТНА ПОКА БЕЛЫЙ ИНДИКАТОР (2), НЕ ПЕРЕМЕСТИТСЯ В СЕРЕДИНУ ПРОРЕЗИ (3) С ВНУТРЕННЕЙ СТОРОНЫ

РЕГУЛИРОВКА НАТЯЖЕНИЯ ПОЛОТНА
ПОВОРАЧИВАЙТЕ БОЛТ (1) ДЛЯ НАТЯЖЕНИЯ ПОЛОТНА ПОКА БЕЛЫЙ ИНДИКАТОР (2), НЕ ПЕРЕМЕСТИТСЯ В СЕРЕДИНУ ПРОРЕЗИ (3) С ВНУТРЕННЕЙ СТОРОНЫ

1036727

DECALS – RUSSIAN

Ref	Part Number	Description	Qty	Serial Number
1	340052	DECAL – OIL, IMPORTANT, RUSSIAN		
2	220832	DECAL – IMPORTANT: GUARDS, RUSSIAN		
3	220834	DECAL – RH DRAPER TENSION, RUSSIAN		
4	220831	DECAL – LH DRAPER TENSION, RUSSIAN		

115 Decals – Spanish

1

2

3

4

1036716

DECALS – SPANISH

Ref	Part Number	Description	Qty	Serial Number
1	340050	DECAL – OIL, IMPORTANT, SPANISH		
2	220807	DECAL – IMPORTANT: GUARDS, SPANISH		
3	220835	DECAL – RH DRAPER TENSION, SPANISH		
4	220814	DECAL – LH DRAPER TENSION, SPANISH		

116 Paint

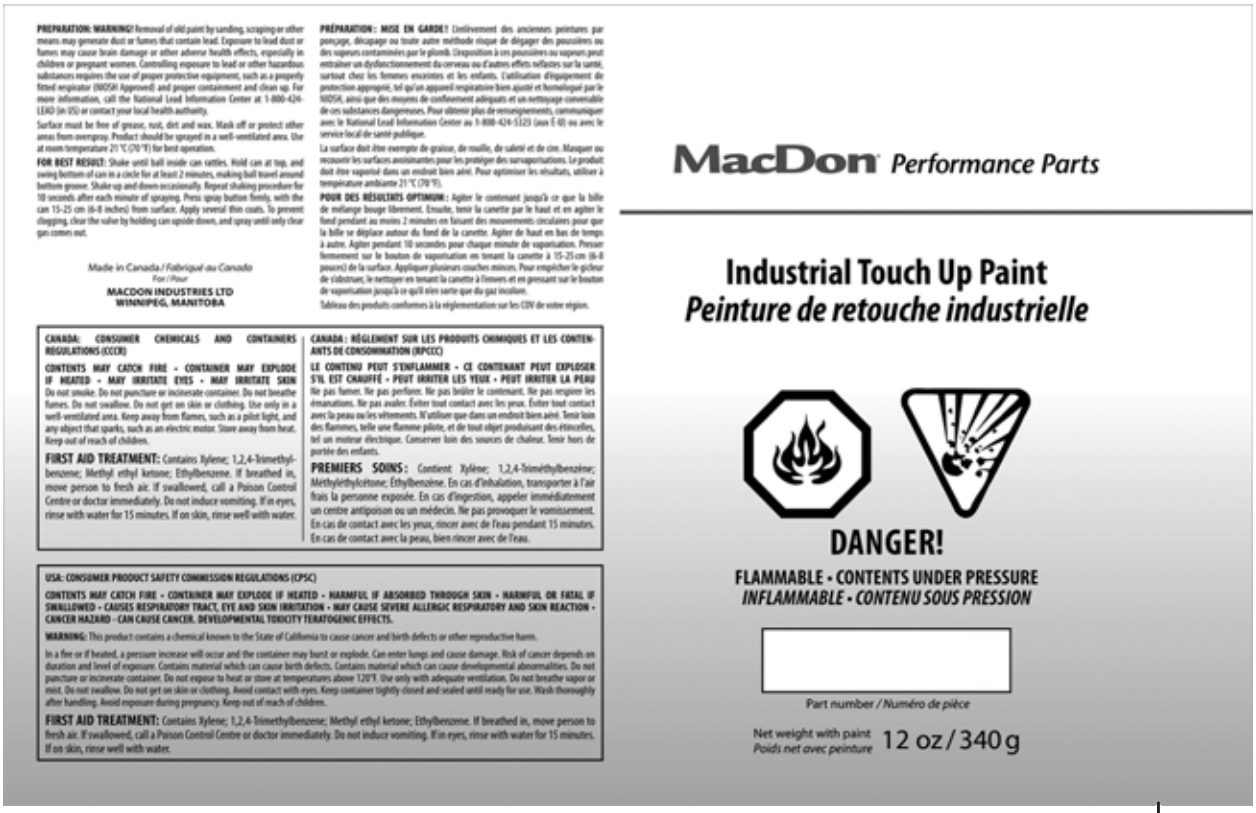

1

2

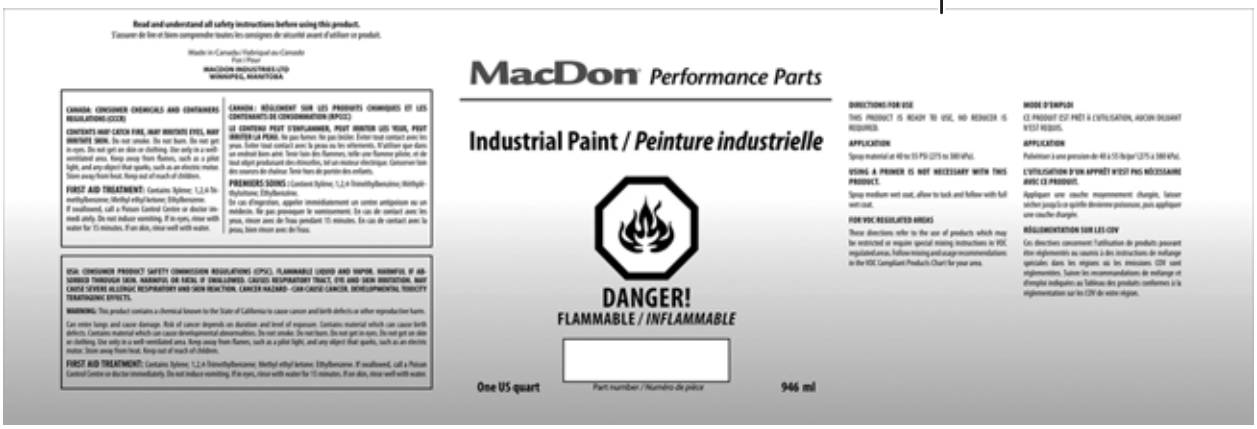

1037431

Ref	Part Number	Description	Qty	Serial Number
1	135148	PAINT – BLACK (55-65 GLOSS LEVEL), SPRAY CAN, 12 OZ. (340 G) AEROSOL [473]		
	32879	PAINT – WHITE, SPRAY CAN, 12 OZ. (340 G) AEROSOL [473]		
	23950	PAINT – RED, SPRAY CAN, 12 OZ. (340 G) AEROSOL [473]		
2	25991	PAINT – BLACK (55-65 GLOSS LEVEL), 1 US QUART (946 ML)		
	23957	PAINT – WHITE, 1 US QUART (946 ML)		
	32880	PAINT – RED, 1 US QUART (946 ML)		

473. To be used for small touch-ups only.

117 (Option) Brace Tube Kits

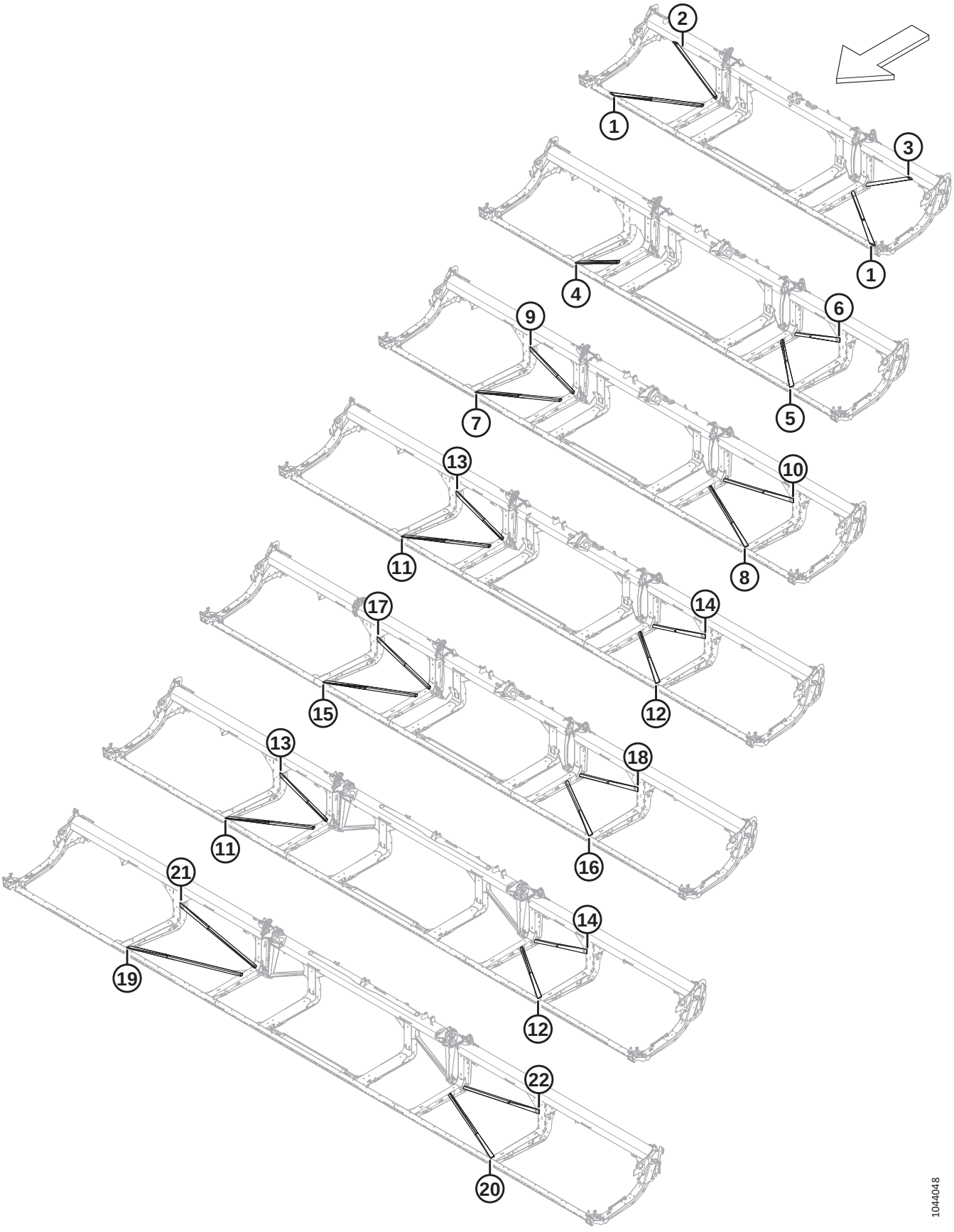

(OPTION) BRACE TUBE KITS

IMPORTANT:

Kits provided by MacDon Industries Ltd. in order to assist you in fixing damage caused by the end user to certain machinery manufactured by MacDon Industries Ltd. By receiving and installing these parts you assume all risk and liability of any nature arising out of the installation of this part. MacDon Industries Ltd. and its affiliates disclaim any and all liability arising from installation of this part. If installation of this part requires welding, such welding should be performed by an individual certified by an accredited institute in your jurisdiction with the necessary welding qualifications and/or certifications.

NOTE:

Brace kits can be used on single or double knife and regular or split frames.

Ref	Part Number	Description	Qty	Serial Number
1	**368699**	**KIT – TUBE DIAG BRACE, 25 HOR**	**2**	
2	**368700**	**KIT – TUBE DIAG BRACE, 25 V RH**	**1**	
3	**368701**	**KIT – TUBE DIAG BRACE, 25 V LH**	**1**	
4	**368702**	**KIT – TUBE DIAG BRACE, 30 H RH**	**1**	
5	**368703**	**KIT – TUBE DIAG BRACE, 30 H LH**	**1**	
6	**368704**	**KIT – TUBE DIAG BRACE, 30 V RH**	**1**	
7	**368705**	**KIT – TUBE DIAG BRACE, 35 H RH**	**1**	
8	**368707**	**KIT – TUBE DIAG BRACE, 35 H LH**	**1**	
9	**368706**	**KIT – TUBE DIAG BRACE, 35 V RH**	**1**	
10	**368708**	**KIT – TUBE DIAG BRACE, 35 V LH**	**1**	
11	**368709**	**KIT – TUBE DIAG BRACE, 40/45 H RH**	**1**	
12	**368711**	**KIT – TUBE DIAG BRACE, 40/45 H LH**	**1**	
13	**368710**	**KIT – TUBE DIAG BRACE, 40/45 V RH**	**1**	
14	**368712**	**KIT – TUBE DIAG BRACE, 40/45 V LH**	**1**	
15	**368713**	**KIT – TUBE DIAG BRACE, 41 H RH**	**1**	
16	**368715**	**KIT – TUBE DIAG BRACE, 41 H LH**	**1**	
17	**368714**	**KIT – TUBE DIAG BRACE, 41 V RH**	**1**	
18	**368716**	**KIT – TUBE DIAG BRACE, 41 V LH**	**1**	
19	**368717**	**KIT – TUBE DIAG BRACE, 50 H RH**	**1**	
20	**368719**	**KIT – TUBE DIAG BRACE, 50 H LH**	**1**	
21	**368718**	**KIT – TUBE DIAG BRACE, 50 V RH**	**1**	
22	**368720**	**KIT – TUBE DIAG BRACE, 50 V LH**	**1**	

118 (Option) ContourMax™ – Outer Contour Wheels

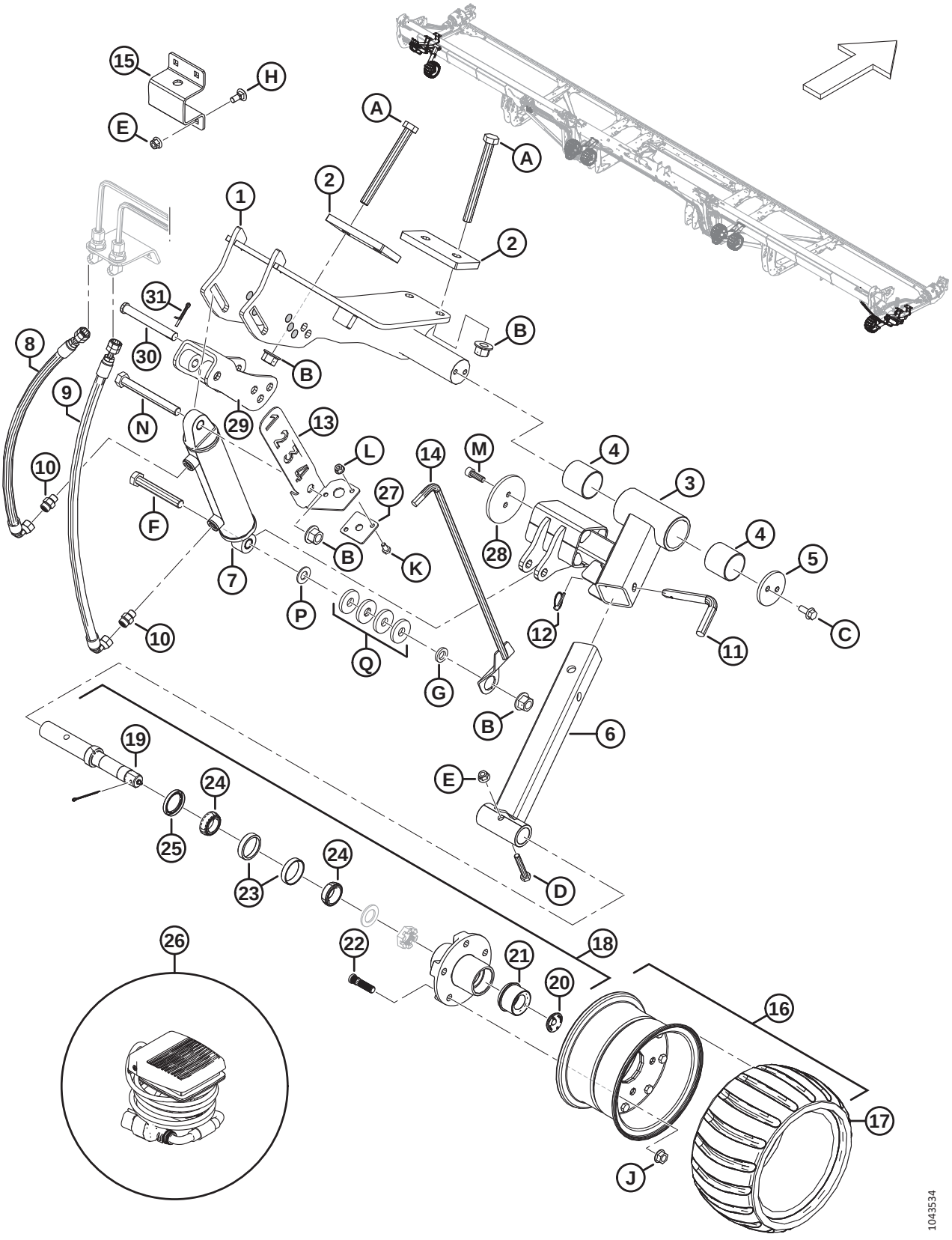

(OPTION) CONTOURMAX™ – OUTER CONTOUR WHEELS

Ref	Part Number	Description	Qty	Serial Number
	B7480	KIT – CONTOURMAX CONTOUR WHEELS [474]		
1	360875	MOUNT WELDT – LH OUTER	1	
	360987	MOUNT WELDT – RH OUTER	1	
2	233874	PLATE – BACKING 85 MM	4	
3	360992	TOP OUTER ARM – ASSY [475]	2	
4	313020	BUSHING – PLASTIC	4	
5	233870	RETAINER	2	
6	313914	LOWER OUTER SUPPORT – WELDT	2	
7	313012	CYLINDER – HYD (LH) [476]	1	
	313794	SEAL KIT		
	258391	BUSHING		
	313011	CYLINDER – HYD (RH) [477]	1	
	313793	SEAL KIT		
	258391	BUSHING		
8	323995	HOSE – HYD	2	
9	323994	HOSE – HYD	2	
10	135778	FITTING – ADAPTER	4	
11	313921	PIN – LOCKING	2	
12	50193	PIN – LYNCH	2	
13	NSS	BRACKET – INDICATOR (LH ONLY) [478]	1	
	360358	KIT – ASSY, CONTMAX GAUGE SERV [479]	1	
14	NSS	HEIGHT INDICATOR – WELDT (LH ONLY) [478]	1	
	360358	KIT – ASSY, CONTMAX GAUGE SERV [479]	1	
15	313922	STRAP – WHEEL STORAGE (LH ONLY) [480]	1	
16	313368	CONTOUR WHEEL – ASSY [481]	2	
17	313366	TIRE – CONTOUR WHEEL	2	
18	313114	SPINDLE – ASSY [482]	2	
19	313859	SPINDLE – SHAFT	2	
20	284705	PLUG – RUBBER	2	
21	284706	CAP – EZ LUBE	2	

474. The kit includes all listed inner and outer wheel parts to complete the install on a ContourMax™ ready header. If your header is not factory configured you will also need one of the following bundles, refer to Sections *91 Hydraulics – ContourMax™, Contour Wheels (FD225 and FD230), page 219* to *93 Hydraulics – ContourMax™, Contour Wheels (FD240, FD241, FD245, and FD250), page 225*. Kits are available through Whole Goods only.
475. The arm assembly includes two plastic bushings (MD #313020).
476. Left hydraulic cylinder.
477. Right hydraulic cylinder.
478. Indicator bracket (MD #340703) and height indicator (MD #313447) have been superseded with service kit (MD #360358).
479. For service parts, refer to Section *120 (Option) ContourMax™ – Gauge Service Kit, page 289*.
480. Left outer contour wheel only.
481. The wheel assembly includes tire (MD #313366).
482. The spindle assembly includes spindle shaft (MD #313859), rubber plug (MD #284705), EZ lube cap (MD #284706), five studs (MD #284707), 47 mm cup bearing (MD #284708), 44 mm cone bearing (MD #284709), seal (MD #284710), slotted nut (NSS), and washer (NSS).

(OPTION) CONTOURMAX™ – OUTER CONTOUR WHEELS

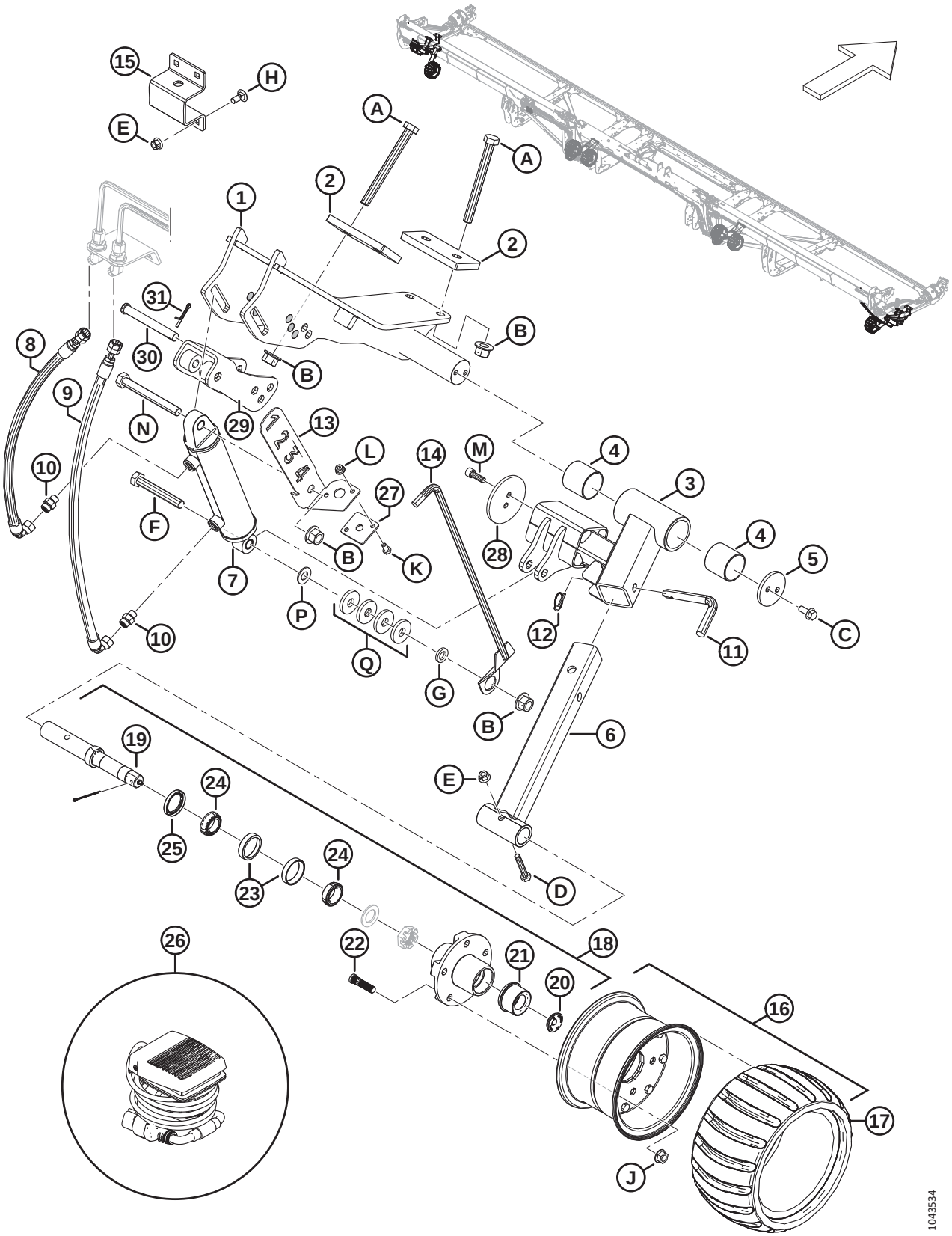

Ref	Part Number	Description	Qty	Serial Number
22	284707	STUD	10	
23	284708	BEARING – CUP, 47MM	2	
24	284709	BEARING – CONE, 44MM	2	
25	284710	SEAL	2	
26	314581	HARNESS – FOOT PEDAL	1	
27	313441	GUIDE – INDICATOR	1	
28	233920	RETAINER – BOLT ON 3.75 IN. DISC	2	
29	319878	ADJ WELDT – CONTOURMAX	2	486190–
	233975	ADJ WELDT – CONTOURMAX (2023–PRIOR, SERVICE ONLY) [483]	2	–486189
30	113813	PIN – CLEVIS, 15.71 MM, 115 MM, ZN PL	2	
31	18608	PIN – COTTER 3/16 DIA X 1.5 ZP	2	
A	320122	BOLT – HEX HD M16 X 2 X 160-10.9-ZINC		
B	136440	NUT – HEX FLG CTR LK M16 X 2-10-AA1J		
C	135783	BOLT – HEX FLG HD TFL M10 X 1.5 X 25-10.9-AA1J		
D	184664	BOLT – HEX HD M10 X 1.5 X 60-8.8-AA1J		
E	135799	NUT – HEX FLG CTR LOC M10 X 1.5-10		
F	136159	BOLT – HEX HD M16 X 2 X 110-8.8-AA1J (LH ONLY) [484]		
	152602	BOLT – HEX HD M16 X 2 X 80-10.9-AA1J (RH ONLY) [485]		
G	103361	WASHER – FLAT (LH ONLY) [484]		
H	135785	BOLT – RHSN M10 X 1.5 X 25-8.8-AA1J		
J	188470	NUT – FLG DT SMFC 1/2-20 UNF GR 8 AA1J		
K	50139	BOLT – HEX HD TFL M8 X 1.25 X 16-8.8-AA1J		
L	135337	NUT – HEX FLG CTR LK M8 X 1.25-8-AA1J		
M	135401	SCREW – HEX SOC HD TFL M10 X 1.5 X 30-8.8-AA1J		
N	184677	BOLT – HEX HD M16 X 2 X 140-8.8-AA1J		
P	18600	WASHER – FLAT SAE 21/32 ID X 1 5/16 OD AA1J (LH ONLY) [484]		
Q	4762	WASHER – FLAT, 2/3 IN. ID, 1 13/16 IN. OD, 1/4 IN. THK (LH ONLY) [484]		

483. Service part only for model year 2023 and prior.
484. Left outer contour wheel only.
485. Right outer contour wheel only.

119 (Option) ContourMax™ – Inner Contour Wheels

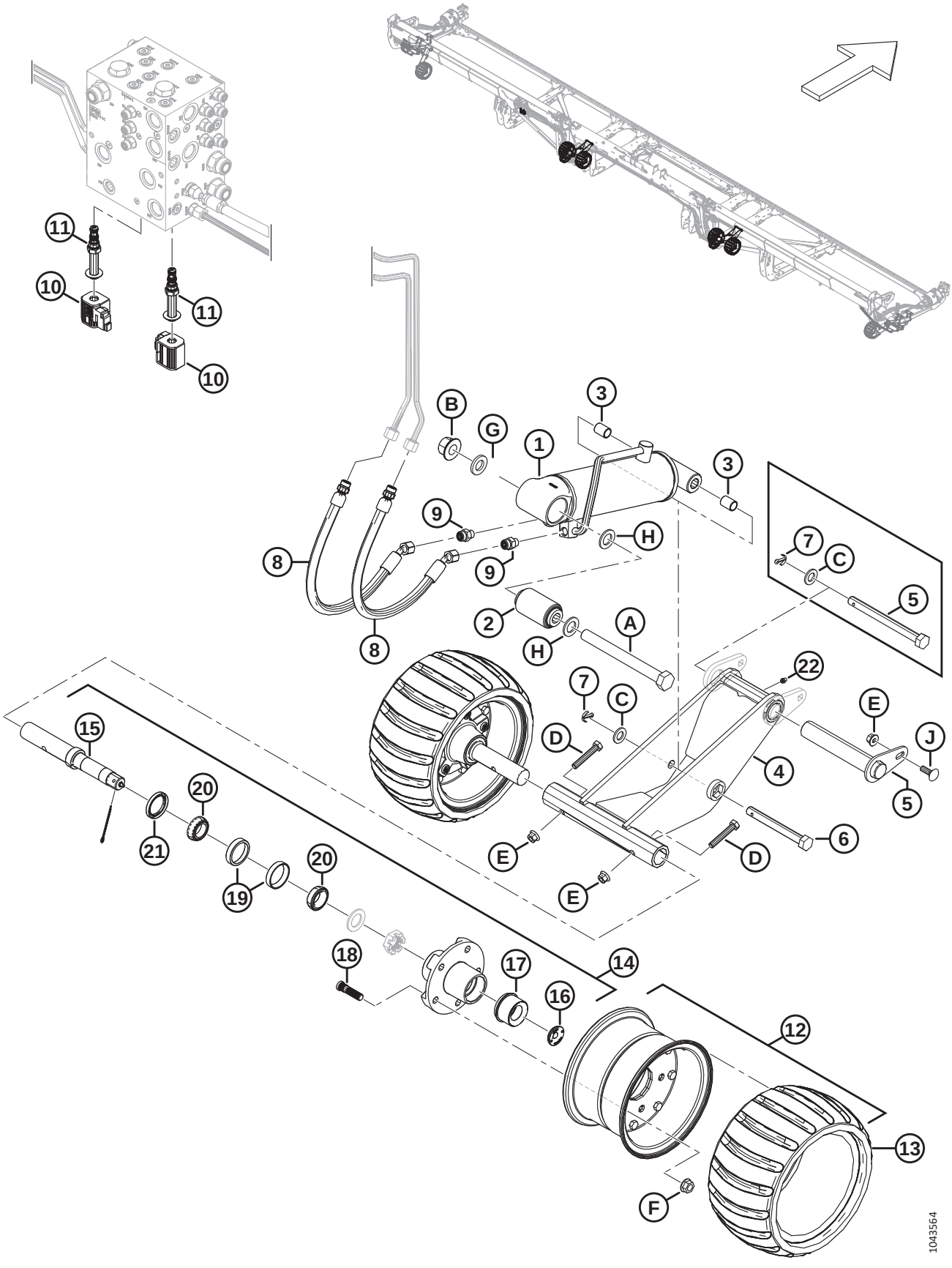

(OPTION) CONTOURMAX™ – INNER CONTOUR WHEELS

Ref	Part Number	Description	Qty	Serial Number
	B7480	KIT – CONTOURMAX CONTOUR WHEELS [486]		
1	313776	LH CYLINDER ISOLATOR – ASSY [487]	1	
	313791	SEAL KIT		
	313777	RH CYLINDER ISOLATOR – ASSY [487]	1	
	313792	SEAL KIT		
2	313007	BUSHING – BONDED RUBBER	2	
3	258391	BUSHING	4	
4	360774	ASSEMBLY – CONTOURMAX W/ ZERK [488]	2	
5	360714	PIN – CONTOURMAX [489]	2	
	360812	KIT – 1.25 IN. CONTOURMAX PIN [490]	A/R	
	360818	KIT – 5/8 IN. CONTOURMAX PIN [491]	A/R	
	313748	PIN – HEX HD 5/8 X 7 IN LG ZINC [492]	A/R	
6	313753	PIN – HEX HD 5/8 X 5.25 LG ZINC	2	
7	18648	PIN – COTTER 3/16 DIA X 1.25 ZP	4	
8	283783	HOSE – HYD	4	
	135865	O-RING – Ø1.78 X Ø9.25		
9	135778	FITTING – ADAPTER	4	
10	287449	COIL – 12VDC - .625IN	2	
11	287450	VALVE – POPPET	2	
12	313368	CONTOUR WHEEL – ASSY [493]	4	
13	313366	TIRE – CONTOUR WHEEL	4	
14	313114	SPINDLE – ASSY [494]	4	
15	313859	SPINDLE – SHAFT	4	
16	284705	PLUG – RUBBER	4	

486. The kit includes all listed inner and outer wheel parts to complete the install on a ContourMax™ ready header. If your header is not factory configured you will also need one of the following bundles, refer to Sections *91 Hydraulics – ContourMax™, Contour Wheels (FD225 and FD230), page 219* to *93 Hydraulics – ContourMax™, Contour Wheels (FD240, FD241, FD245, and FD250), page 225*. Kits are available through Whole Goods only.
487. The cylinder isolator assembly includes bonded rubber bushing (MD #313007) and two bushings (MD #258391).
488. Includes lube fitting (MD #18671) and 100-hour grease decal (MD #115759).
489. ContourMax™ Pin (MD #360714) for model year 2024 and later includes a welded lug (NSS) and 1.25 inch pivot pin (NSS). To service model year 2023 and prior headers with the model year 2024 wheel assembly (MD #360774), order 1.25 inch ContourMax™ Pin Service kit (MD #360812) or 5/8 inch ContourMax™ Pin Service kit (MD #360818).
490. The 1.25 inch ContourMax™ Pin Service kit is used to rework the header inner legs to allow the use of the larger pin (MD #360714) to secure the wheel assembly (MD #360774) to the header leg. The kit includes one ContourMax™ pin (MD #360714), two service lugs (MD #360713), two washer templates (MD #360810), hardware (MD #136211, 135799), and instructions.
491. The 5/8 inch ContourMax™ Pin Service kit is used to allow the use of the smaller (model year 2023 and prior) 5/8 inch hex head pin (MD #313748) to secure the wheel assembly (MD #360774) to the header leg. The kit includes one pin (MD #313748), one tube spacer (MD #360819), one cotter pin (MD #18648), two washer plates (NSS), hardware (MD #184717, 319544), and instructions.
492. Service part only for superseded wheel assembly (MD #323478). For new wheel assembly (MD #360774), order pin (MD #360714) or service kits (MD #360812, 360818).
493. The wheel assembly includes tire (MD #313366).
494. The spindle assembly includes spindle shaft (MD #313859), rubber plug (MD #284705), EZ lube cap (MD #284706), five studs (MD #284707), 47 mm cup bearing (MD #284708), 44 mm cone bearing (MD #284709), and seal (MD #284710).

(OPTION) CONTOURMAX™ – INNER CONTOUR WHEELS

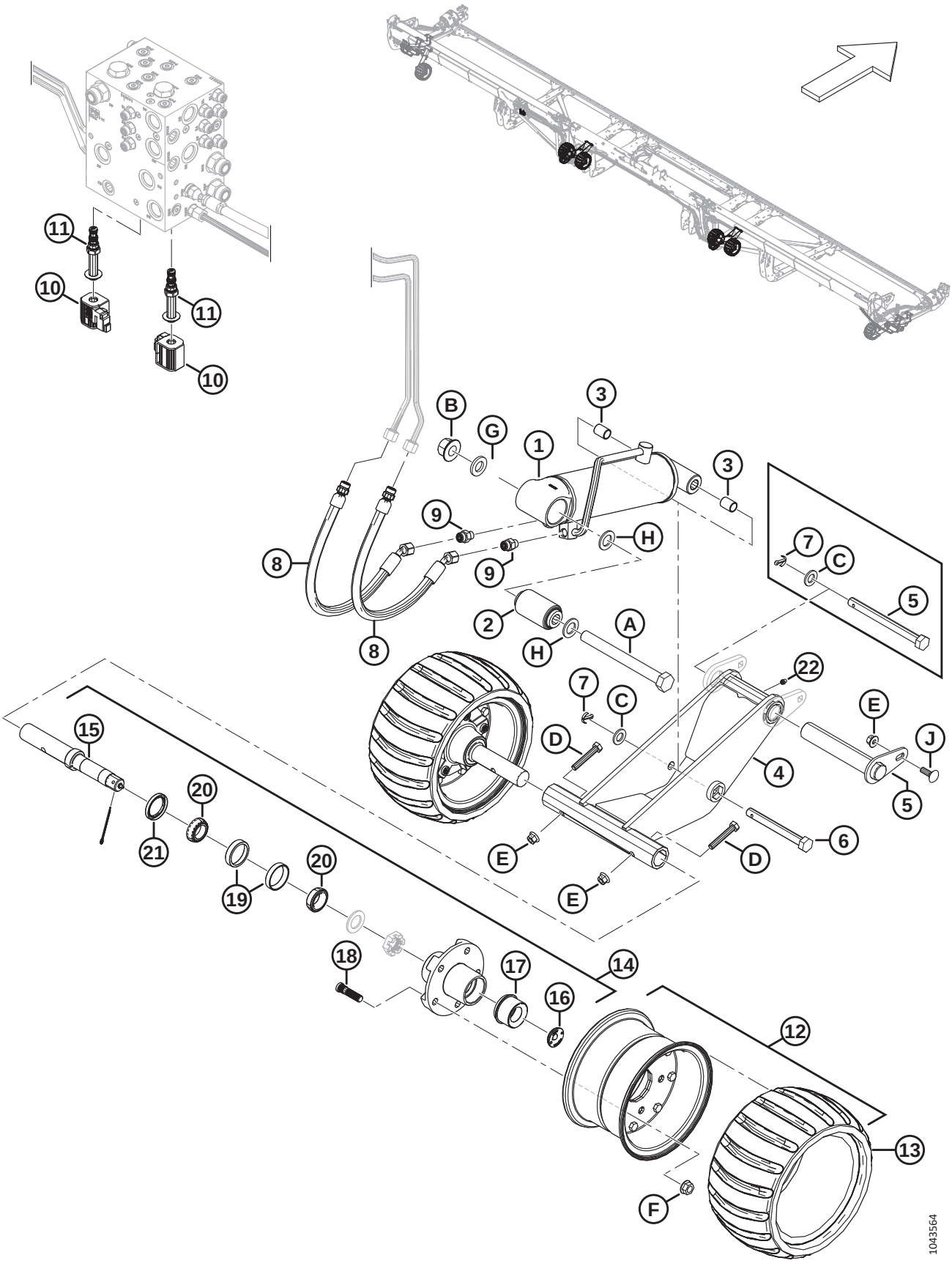

(OPTION) CONTOURMAX™ – INNER CONTOUR WHEELS

Ref	Part Number	Description	Qty	Serial Number
17	284706	CAP – EZ LUBE	4	
18	284707	STUD	20	
19	284708	BEARING – CUP, 47MM	4	
20	284709	BEARING – CONE, 44MM	4	
21	284710	SEAL	4	
22	18671	FITTING – LUBE 1/4 - 28 UNF	2	
A	320331	BOLT – HEX HD M20 X 2.5 X 200-10.9-ZINC		
B	136122	NUT – HEX FLG CTR LOC M20 X 2.5-10-AA1J		
C	184717	WASHER – FLAT REG M16-200HV-AA1J		
D	184664	BOLT – HEX HD M10 X 1.5 X 60-8.8-AA1J		
E	135799	NUT – HEX FLG CTR LOC M10 X 1.5-10z		
F	188470	NUT – FLG DT SMFC 1/2-20 UNF GR 8 AA1J		
G	21540	WASHER – HARD ASTM F436M20-340HV-AB2C		
H	136477	WASHER – FLAT REG M20-200HV		
J	184662	BOLT – RHSN TFL M10 X 1.5 X 30-8.8-AA1J		

120 (Option) ContourMax™ – Gauge Service Kit

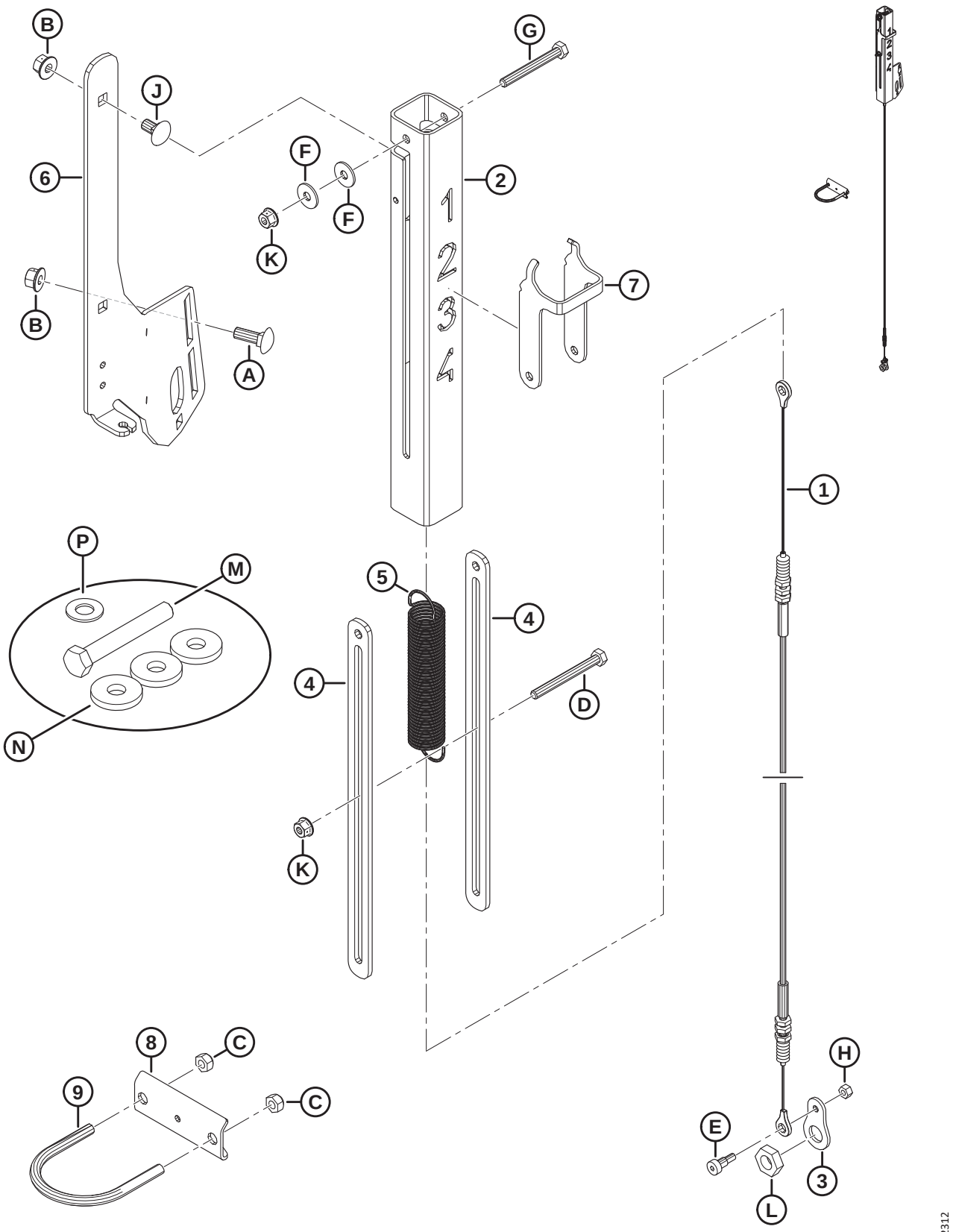

(OPTION) CONTOURMAX™ – GAUGE SERVICE KIT

Ref	Part Number	Description	Qty	Serial Number
	360358	KIT – ASSY, CONTMAX GAUGE SERV		
1	360559	CABLE – CONTOURMAX	1	
2	360551	TUBE – CONTOURMAX INDICATOR	1	
3	360526	PLATE – CABLE CONNECTION	1	
4	233950	SPACER – CONTOURMAX INDICATOR	2	
5	233906	SPRING – CONTOURMAX	1	
6	233900	BRACKET – CONTOURMAX INDICATOR	1	
7	233891	INDICATOR – CONTOUR WHEEL	1	
8	233964	ANCHOR – INDICATOR CABLE	1	
9	47225	BOLT – U	1	
A	184662	BOLT – RHSN TFL M10 X 1.5 X 30-8.8-AA1J		
B	135799	NUT – HEX FLG CTR LOC M10 X 1.5-10		
C	18669	NUT-HEX LK DT 3/8-16 UNC GR5 AA1J		
D	252421	BOLT-HEX HD M 8X 1.25 X 80-8.8-AA2L		
E	197135	SCREW – HEX SOC HD SHLDR M8 X 10		
F	184709	WASHER – FLAT LARGE M8-200HV		
G	184656	BOLT – HEX HD M8 X 1.25 X 70-8.8-AA1J		
H	136773	NUT – HEX CTR LOC M6 X 1-8-AA1J		
J	136178	BOLT – RHSN M10 X 1.5 X 20-8.8-AA1J		
K	135337	NUT – HEX FLG CTR LK M8 X 1.25-8-AA1J		
L	320218	NUT – HEX THIN M16 X 2-SPCL-5-ZINC		
M	136159	BOLT – HEX HD M16 X 2 X 110-8.8-AA3L [495]		
N	4762	WASHER – FLAT [495]		
P	18600	WASHER – FLAT SAE 21/32 ID X 5/16 OD AA1J [495]		

495. Used for model year 2020 and 2021 only.

121 (Option) ContourMax™ – Height Sensing – Case, New Holland, and John Deere X9 Series

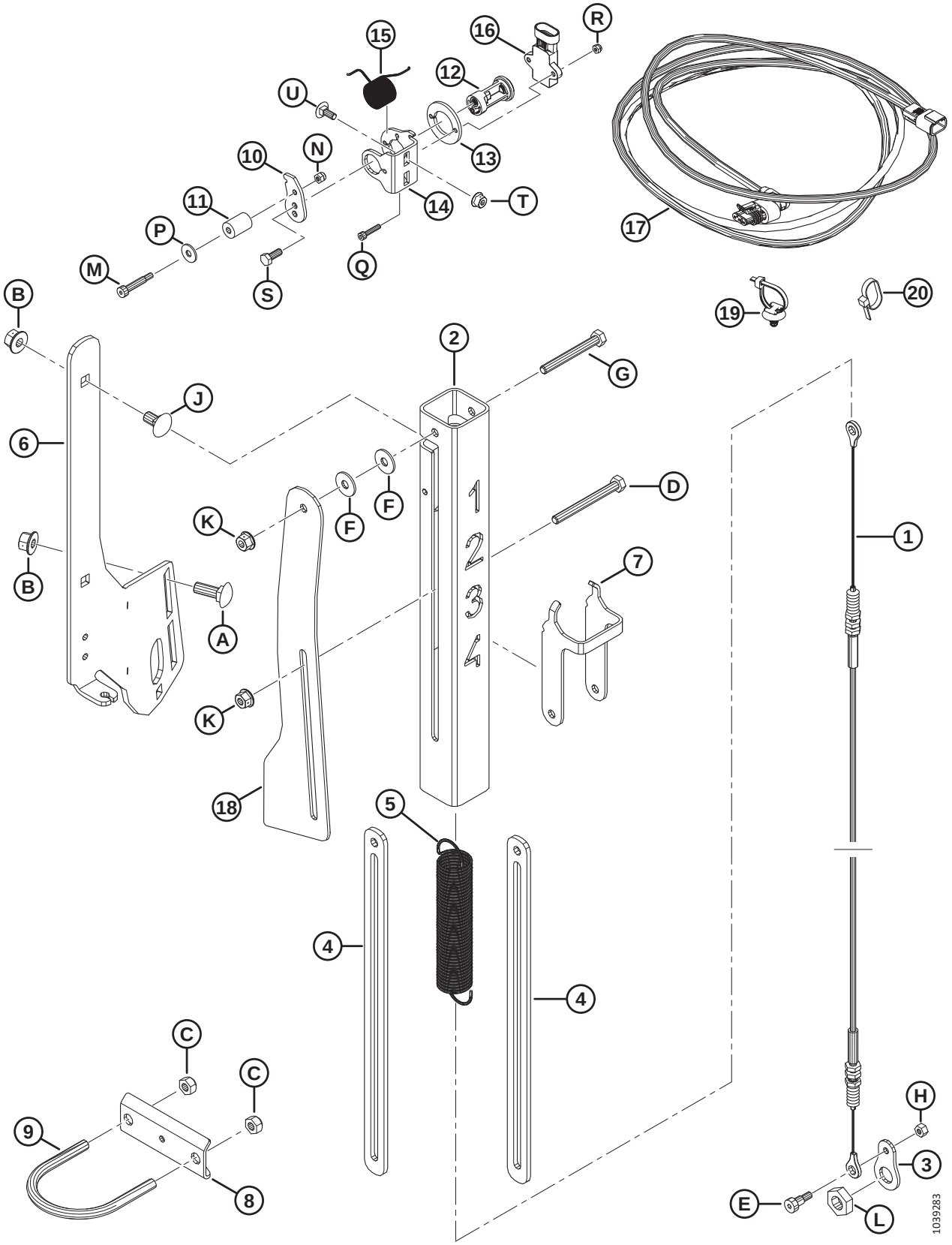

NOTE:

The ContourMax™ Height Sensing kit is required for all Case, all John Deere X9 Series, and model year 2019 and later New Holland combine headers equipped with the ContourMax™ Contour Wheels option.

Ref	Part Number	Description	Qty	Serial Number
	360358	KIT – ASSY, CONTMAX GAUGE SERV		
	B7350	KIT – CONTOURMAX SENSOR [496]		
1	360559	CABLE – CONTOURMAX	1	
2	360551	TUBE – CONTOURMAX INDICATOR	1	
3	360526	PLATE – CABLE CONNECTION	1	
4	233950	SPACER – CONTOURMAX INDICATOR	2	
5	233906	SPRING – CONTOURMAX	1	
6	233900	BRACKET – CONTOURMAX INDICATOR	1	
7	233891	INDICATOR – CONTOUR WHEEL	1	
8	233964	ANCHOR – INDICATOR CABLE	1	
9	47225	BOLT – U	1	
10	340956	ARM – SENSOR	1	
11	340289	ROLLER – 5/8 IN. O.D.	1	
12	352163	ASSY – SENSOR PIVOT	1	
13	352001	SPACER – SENSOR	1	
14	340955	SUPPORT – SENSOR	1	
15	340954	SPRING – TORSION	1	
16	500303	SENSOR – ROTARY, DUAL CONTACTLESS	1	
17	323694	HARNESS – EXT. CONTOUR POS.	1	
18	323499	LINK – CONTOURMAX SENSOR	1	
19	136655	FASTENER – FIR TREE MT W/ TIE	2	
20	21763	FASTENER – CABLE TIE, BLACK	13	
A	184662	BOLT – RHSN TFL M10 X 1.5 X 30-8.8-AA1J		
B	135799	NUT – HEX FLG CTR LOC M10 X 1.5-10		
C	18669	NUT-HEX LK DT 3/8-16 UNC GR5 AA1J		
D	252421	BOLT-HEX HD M 8X 1.25 X 80-8.8-AA2L		
E	197135	SCREW – HEX SOC HD SHLDR M8 X 10		
F	184709	WASHER – FLAT LARGE M8-200HV		
G	184656	BOLT – HEX HD M8 X 1.25 X 70-8.8-AA1J		
H	136773	NUT – HEX CTR LOC M6 X 1-8-AA1J		
J	136178	BOLT – RHSN M10 X 1.5 X 20-8.8-AA1J		
K	135337	NUT – HEX FLG CTR LK M8 X 1.25-8-AA1J		
L	320218	NUT – HEX THIN M16 X 2-SPCL-5-ZINC		
M	320409	SCREW – HEX SOC HD SHLD R6 X 25-M 5 X0.8 X 9.5-12.9-ZINC		
N	197230	NUT – HEX NYLOC M5 X 0.8-8-AA1J		
P	184706	WASHER – FLAT LARGE M6-200HV		
Q	320410	SCREW – HEX SOC HDM4 X 0.7 X 20-A2SS		
R	320390	NUT – HEX NYLOC M4 X0.7-8-A2-SS		

496. Kits are available through Whole Goods only.

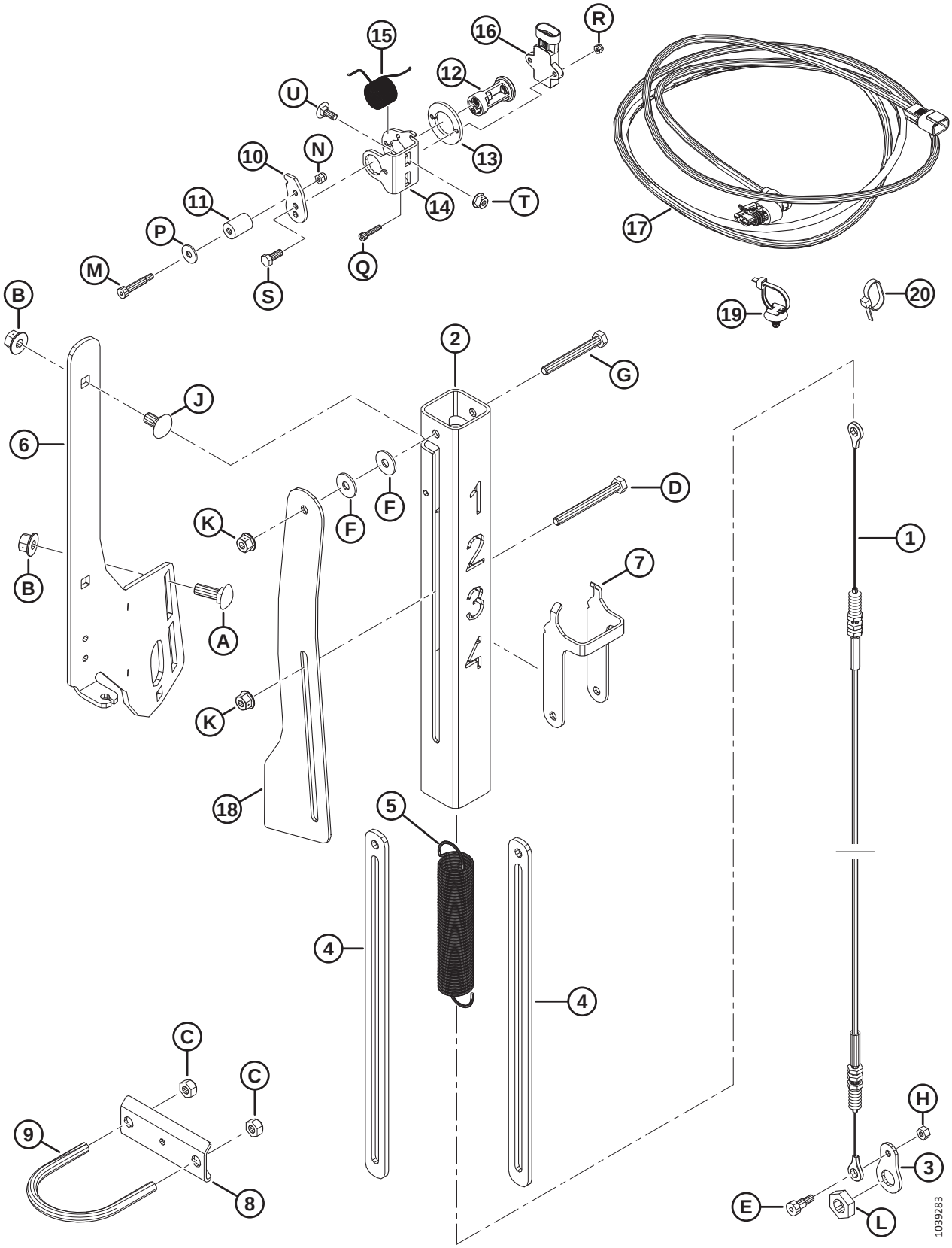
15
16
R
12
U
13
10
N
11
14
T
P
M
S
Q
17
19
20
B
2
G
J
6
D
K
F
F
1
2
3
4
7
B
A
K
18
5
4
4
C
C
9
8
H
3
E
L
1039283

Ref	Part Number	Description	Qty	Serial Number
S	184642	BOLT – HEX HD TFL M6 X 1 X 16-8.8-AA1J		
T	152668	NUT – HEX FLG CTR LOC M6 X 1-8		
U	136748	BOLT – RHSN M6 X 1 X 16-8.8-ZINC		

122 (Option) Crop Lifters and Storage Rack

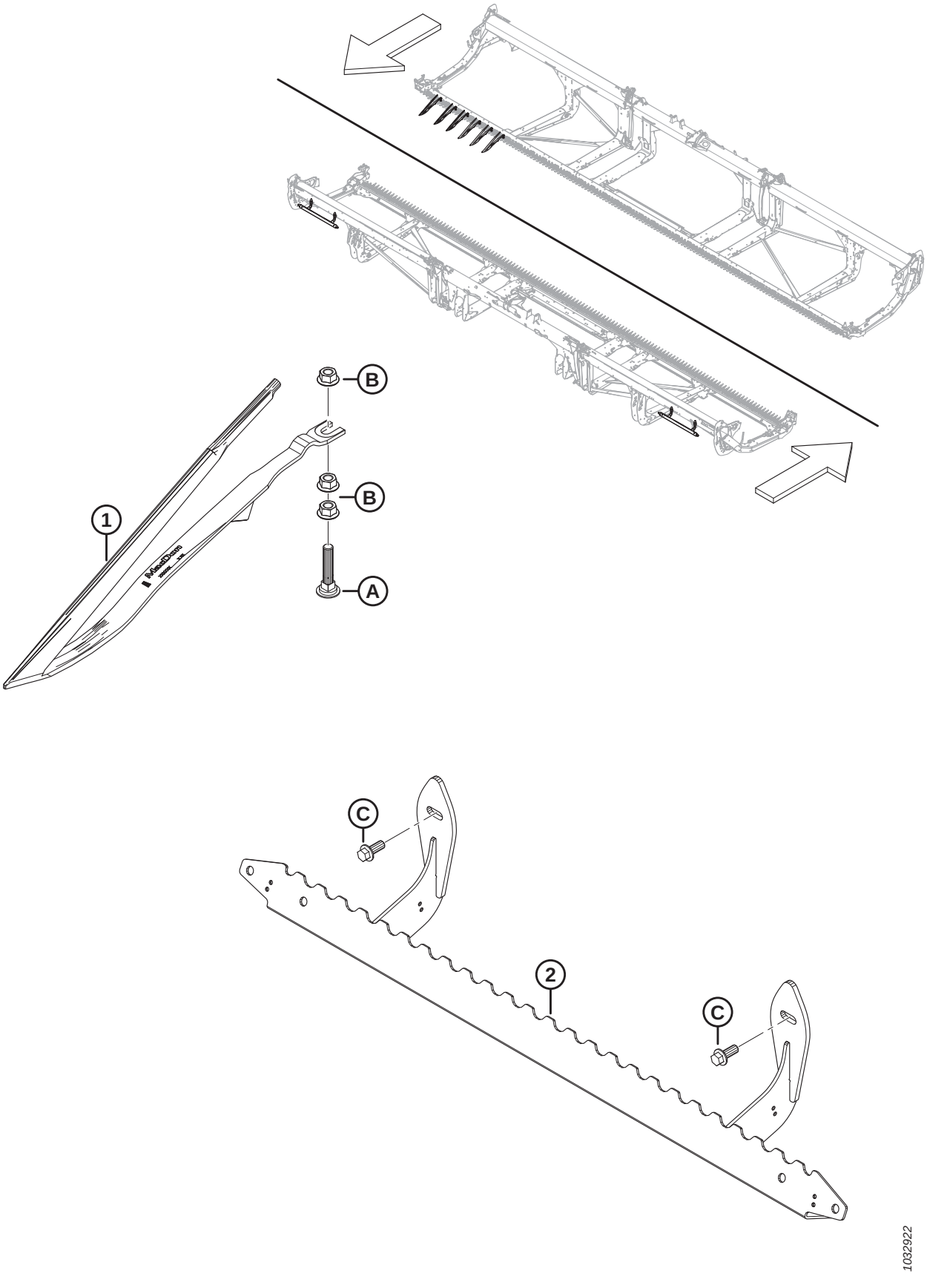

(OPTION) CROP LIFTERS AND STORAGE RACK

Ref	Part Number	Description	Qty	Serial Number
	B7022	KIT – CROP LIFTER [497]		
	B7023	KIT – LIFTER STORAGE RACK [498]		
1	233748	DEFLECTOR – CROP LIFTER	A/R	
2	233770	SUPPORT – LIFTER STORAGE WELDT	1	
A	226280	BOLT – RHSN SPCL M12 X 60-8.8		
B	136036	NUT – HEX SM FLG M12 X 1.75-8-AA1J		
C	136312	BOLT – HEX FLG HD TFL M10 X 1.5 X 25-10.9-AA1J		

497. Crop lifters are recommended for severely lodged cereal crops where the Operator wants maximum possible stubble height. Quantity of kits required varies depending on header size: FD225 and FD230 = 3 kits; FD235, FD240, and FD241 = 4 kits; FD245 and FD250 = 5 kits. Kits are available through Whole Goods only.
498. Quantities of Lifter Storage Rack kits required varies depending on header size. FD225 = 1 kit; FD230, FD235, FD240, FD241, FD245, and FD250 = 2 kits. Kits are available through Whole Goods only.

123 (Option) Divider Storage Bracket

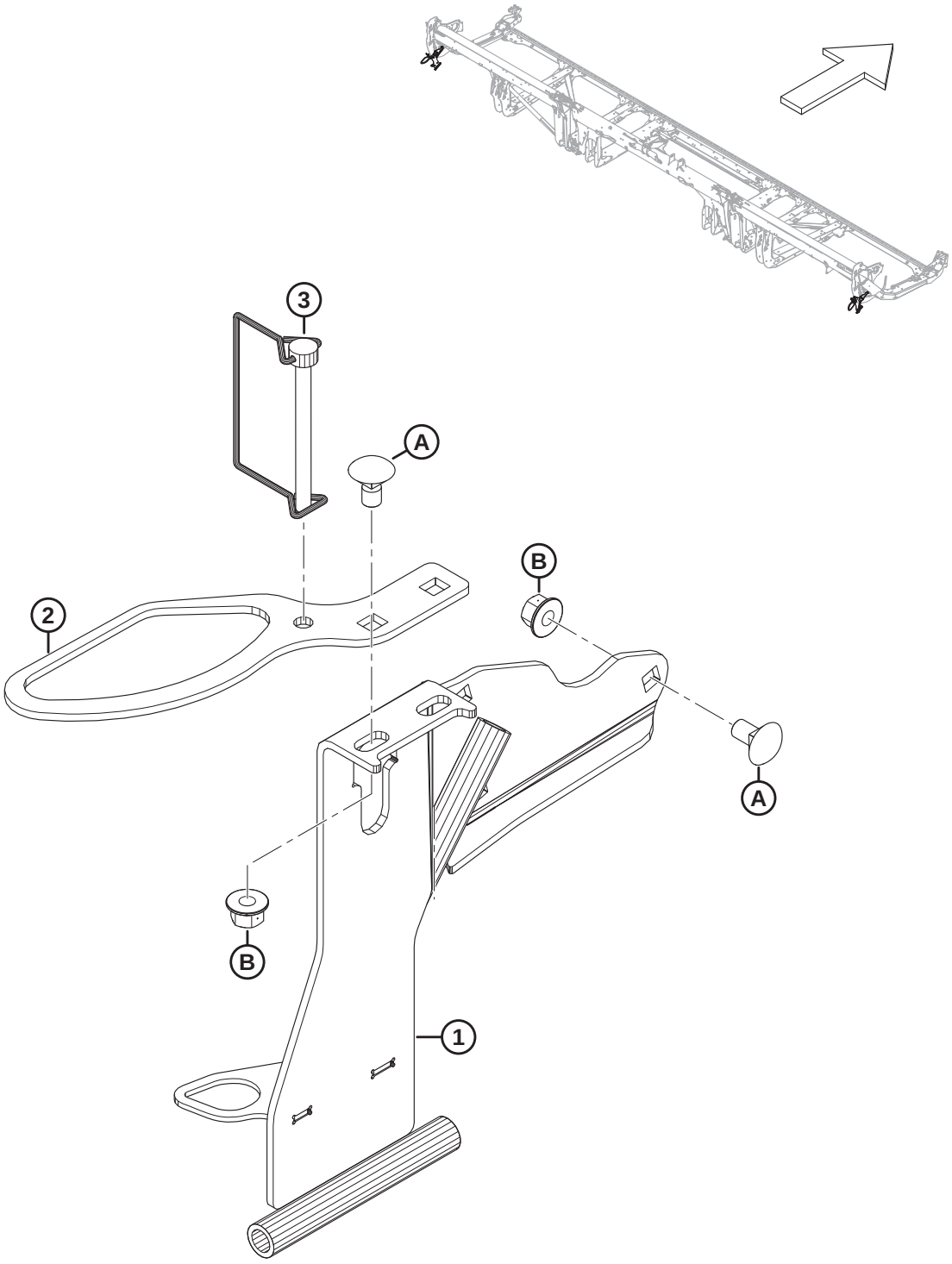

1032910

(OPTION) DIVIDER STORAGE BRACKET

Ref	Part Number	Description	Qty	Serial Number
	B7030	KIT – DIVIDER STORAGE BRACKET [499]		
1	313566	LH DIVIDER STORAGE – WELDT	1	
	313705	RH DIVIDER STORAGE – WELDT	1	
2	311464	SUPPORT – STORAGE RICE RODS	2	
3	136749	PIN – LYNCH	2	
A	136178	BOLT – RHSN M10 X 1.5 X 20-8.8-AA1J		
B	135799	NUT – HEX FLG CTR LOC M10 X 1.5-10		

499. Kits are available through Whole Goods only.

124 (Option) EasyMove™ – Slow Speed Transport, Base Kit and Stabilizer Wheels

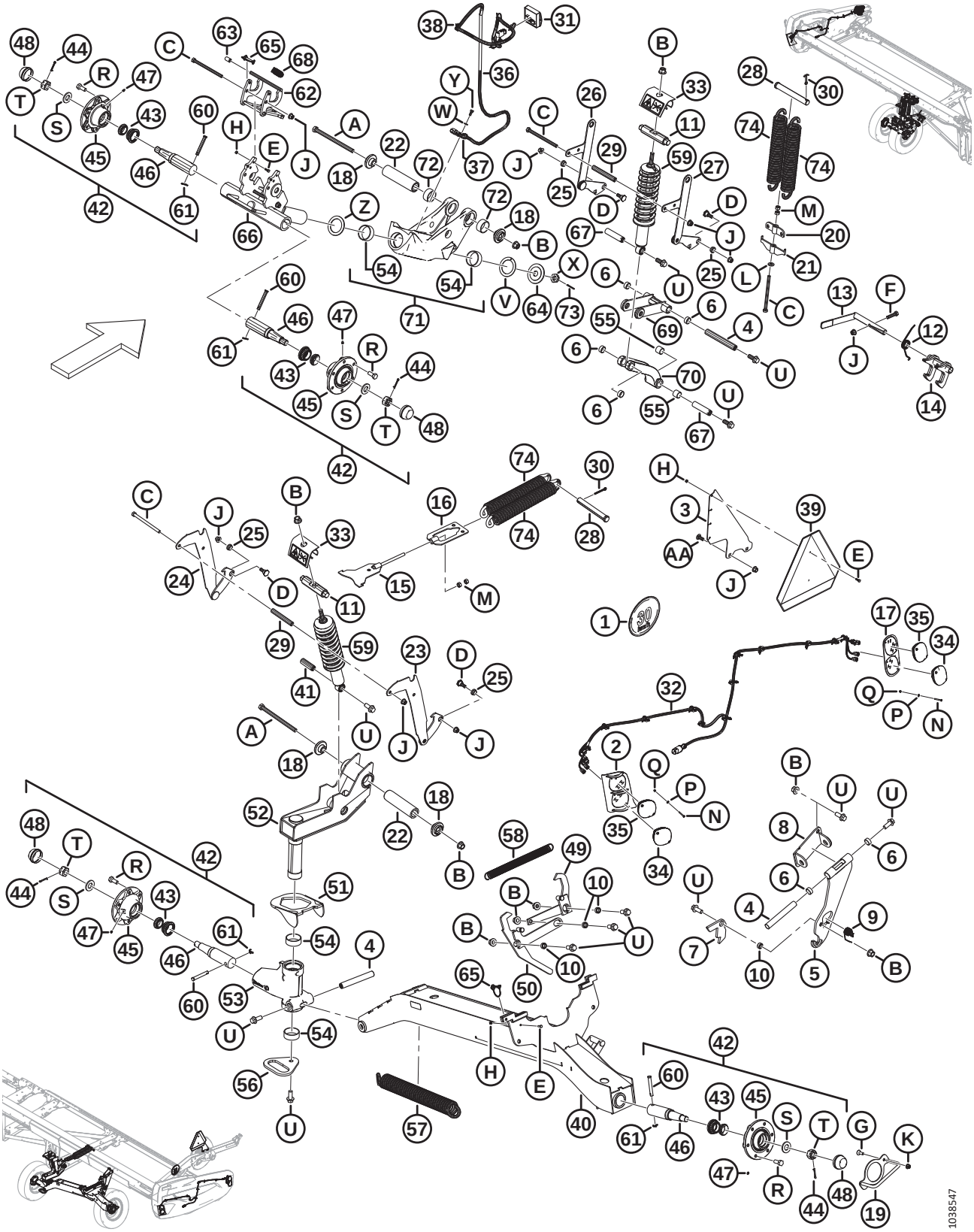

Ref	Part Number	Description	Qty	Serial Number
	B6288	EASYMOVE™ SLOW SPEED TRANSPORT – STABILIZER WHEELS AND BASE KIT [500]		
1	327561	KIT – DECALS, SIS BRACKET	1	
	193243	DECAL – SIS 30 KM/H, SMALL	1	
	193241	DECAL – SIS, 30 KM/H	1	
	193240	DECAL – SIS 20 MILE/H, SMALL	1	
	193242	DECAL – SIS 20 MILE/H	1	
2	327429	LIGHT BEZEL – WELDT, LH [501]	1	
	327179	LIGHT BEZEL – WELDT, RH [501]	1	
3	327428	LUG	1	
4	316794	PIN	3	
5	316358	SUPPORT – ASSY [502]	1	
6	210690	BUSHING – COMPOSITE	6	
7	303961	PLATE – LATCH	1	
8	327704	PIVOT – WELDT	1	
9	303379	SPRING – TORSION	1	
10	252958	SPACER	4	
11	316284	PIN	2	
12	316119	SPRING – TORSION	1	
13	316118	HANDLE – ASSY	1	
	287701	GRIP – HANDLE	1	
14	316110	LATCH – WELDT	1	
15	316096	SUPPORT – WELDT	1	
16	316095	SUPPORT – WELDT	1	
17	313406	BEZEL – LH FRONT [501]	1	
	313425	BEZEL – RH FRONT [501]	1	
18	303839	CASTING – PLATE	4	
19	303766	HANDLE – WELDT	1	
20	303693	SPRING TENSION SUPPORT – WELDT	1	
21	303691	SPRING ADJUST SUPPORT – WELDT	1	
22	303525	PIN – PIVOT	2	
23	327756	SUPPORT, HEIGHT ADJUST – WELDT, RH	1	
24	327755	SUPPORT, HEIGHT ADJUST – WELDT, LH	1	
25	303492	BUSHING – COMPOSITE	4	
26	303491	SUPPORT, HEIGHT ADJUST – WELDT	1	
27	303486	SUPPORT, HEIGHT ADJUST – WELDT	1	
28	292692	PIN – CLEVIS	2	
29	210985	SPACER	2	
30	18609	PIN – COTTER 1/4 DIA X 2 ZP	2	
31	327255	MODULE – TRANSPORT LED W/ TAPE	1	

500. Kits are available through Whole Goods only.
501. The bezels are mounted onto the header endshields with pan head screw (MD #320154), flat washer (MD #18798), and Nyloc hex nut (MD #197320).
502. The support assembly includes support (NSS) and two composite bushings (MD #210690).

(OPTION) EASYMOVE™ – SLOW SPEED TRANSPORT, BASE KIT AND STABILIZER WHEELS

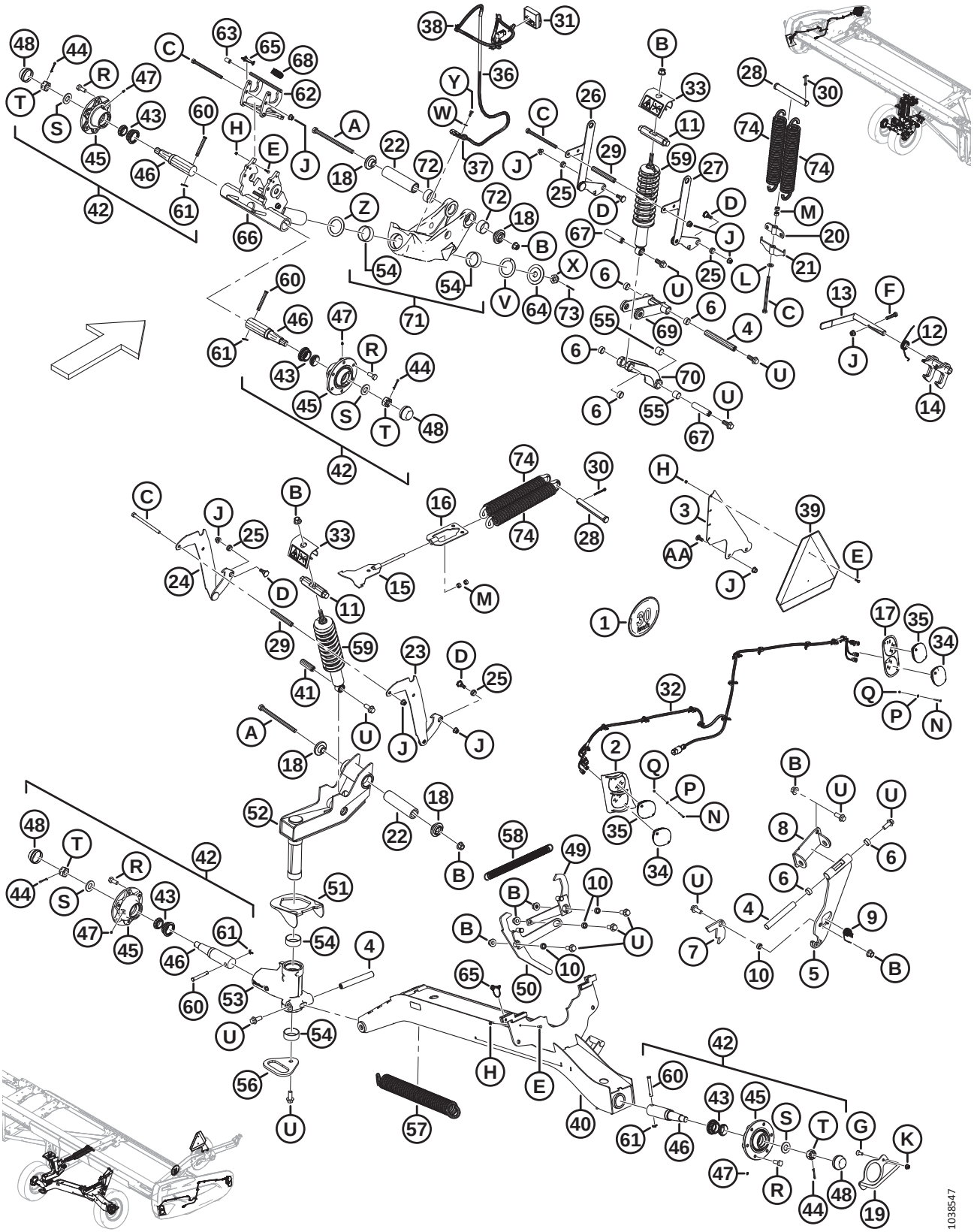

Ref	Part Number	Description	Qty	Serial Number
32	323049	HARNESS – TRANSPORT EXT LTS	2	
33	327089	ANTI PRY – ASSY	2	
34	316044	LIGHT – RED	2	
35	284215	LIGHT – AMBER	4	
36	284548	HARNESS – TRANSPORT EXT LEG	1	
37	135716	CLAMP – INSULATED 5/8 IN.	1	
38	21763	FASTENER – CABLE TIE, BLACK	7	
39	21032	SMV SIGN – METAL AND REFLECTOR	1	
40	327786	SUPPORT, AXLE – WELDT	1	
41	316793	PIN	1	
42	316330	HUB – ASSY [503]	4	
43	316851	KIT – WHEEL BEARING [504]	4	
44	18608	PIN – COTTER 3/16 DIA X 1.5 ZP	4	
45	316847	HUB	4	
46	316848	SPINDLE	4	
47	18671	FITTING – LUBE 1/4 - 28 UNF	4	
48	30520	CAP – DUST	4	
49	327751	ARM – WELDT	1	
50	327749	LEVER – WELDT	1	
51	303832	HOOK – WELDT	1	
52	327672	PIVOT – ASSY	1	
53	303380	ASSY – SUPPORT, PIVOT [505]	1	
54	210661	BUSHING – COMPOSITE	4	
55	133992	BUSHING – COMPOSITE	6	
56	303033	PLATE – HANDLE	1	
57	303021	SPRING – EXTENSION	1	
58	247222	SPRING – EXTENSION	1	
59	327798	DAMPENER – HEADER [506]	2	
60	101007	PIN – CLEVIS	4	
61	18648	PIN – COTTER 3/16 DIA X 1.25 ZP	4	
62	327535	LATCH – ASSY [507]	1	
63	327534	GRIP – HANDLE	1	
64	327745	DISC	1	
65	320205	PIN – LYNCH DIA 5/16 IN. X 1.75 IN. LG W/ TETHER	2	
66	327716	SPINDLE – WELDT	1	
67	316293	PIN	2	
68	303898	SPRING – EXTENSION	1	

503. The hub assembly includes cotter pin (MD #18608), lube fitting (MD #18671), six wheel bolts (MD #18916), dust cap (MD #30520), hub (MD #316847), spindle (MD #316848), wheel bearing kit (MD #316851), slotted nut (MD #316859), and washer (MD #316860).
504. The kit includes bearings (NSS) and seal (NSS).
505. The pivot support assembly includes two composite bushings (MD #210661) and two composite bushings (MD #133992).
506. The dampener includes composite bushing (MD #133992).
507. The latch assembly includes latch (NSS) and handle grip (MD #327534).

(OPTION) EASYMOVE™ – SLOW SPEED TRANSPORT, BASE KIT AND STABILIZER WHEELS

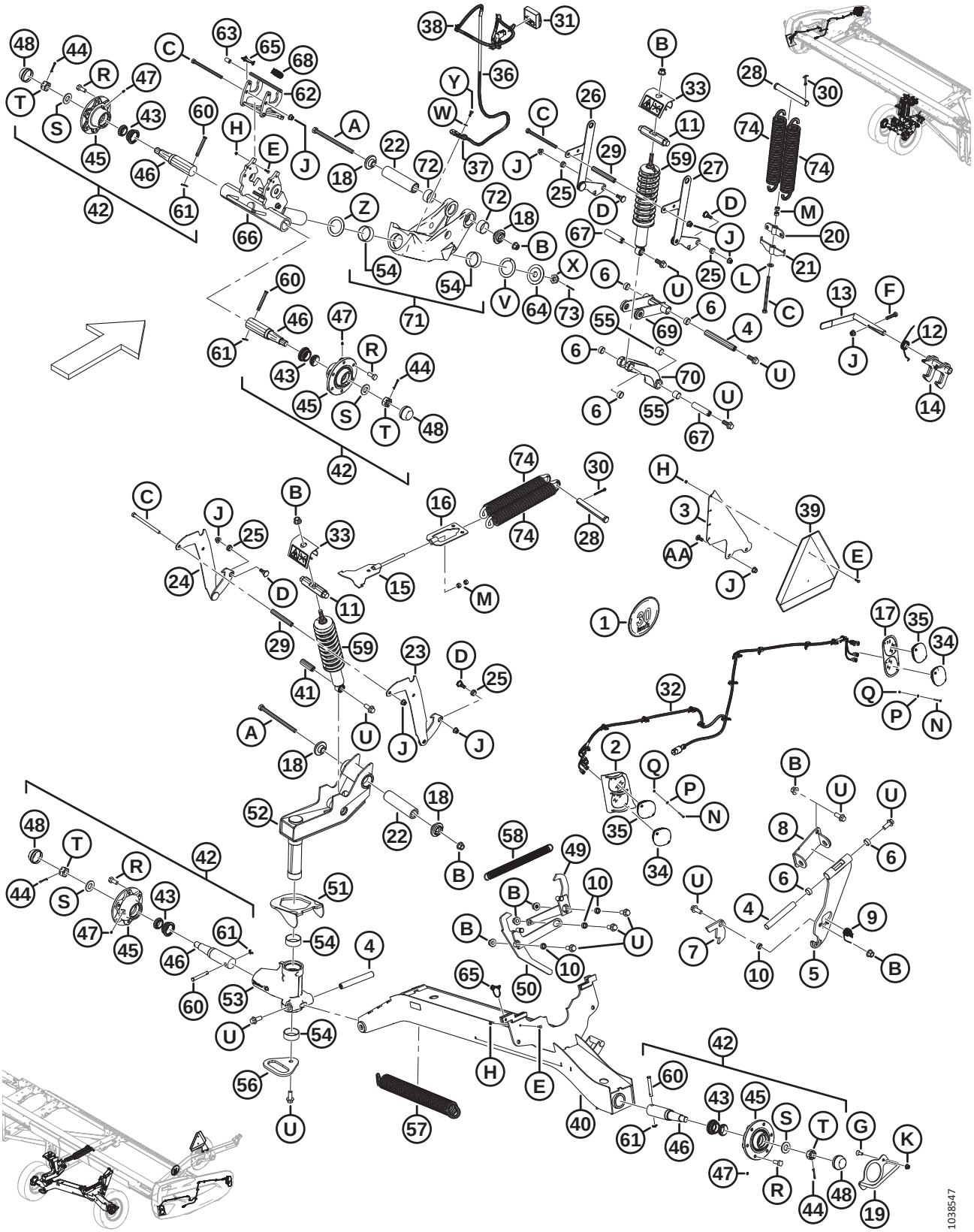

Ref	Part Number	Description	Qty	Serial Number
69	327738	ARM SUPPORT – ASSY [508]	1	
70	303341	CAST SUPPORT – ASSY [509]	1	
71	303283	PIVOT – ASSY [510]	2	
72	327600	BUSHING – COMPOSITE	4	
73	18607	PIN – COTTER 5/32 DIA X 1.5 ZP	1	
74	144724	SPRING – EXTENSION	4	
	316649	DECAL – HEIGHT SETTING, LH	1	
	316639	DECAL – HEIGHT SETTING, RH	1	
	327086	DECAL – ENERGY RELEASE	2	
	165524	REFLECTOR – RED	2	
	302204	DECAL – CA PROPOSITION 65	1	
A	320011	BOLT – HEX HD M16 X 2 X 240-10.9-ZINC		
B	136440	NUT – HEX FLG CTR LK M16 X 2-10-AA1J		
C	252272	BOLT – HEX HD TFL M12 X 1.75 X 180-10.9-ZINC		
D	303251	BOLT – 19 MM SHLDR M12 SPCL		
E	184646	BOLT – HEX HD TFL M6 X 1 X 20-8.8-AA1J		
F	152779	BOLT – HEX HD M12 X 1.75 X 55-8.8-AA1J		
G	136857	SCREW – HEX SOC CSK HD TFL M10 X 1.5 X 30-ZINC		
H	136773	NUT – HEX CTR LOC M6 X 1-8-AA1J		
J	136431	NUT – HEX FLG CTR LOC M12 X 1.75-10		
K	135799	NUT – HEX FLG CTR LOC M10 X 1.5-10		
L	135369	WASHER – HARDENED ASTM F436 1/2		
M	135156	NUT – HEX M12 X 1.75-10-AA1J		
N	320154	SCREW – PAN HD DIN 7985 M4 X 0.7 X 35-4.8-ZINC BLACK		
P	18798	WASHER – FLAT SAE 7/32 ID X 7/16 IN OD AA1J		
Q	197320	NUT – HEX NYLOC M4 X 0.7-8-AA1J		
R	18916	BOLT – 90° WHEEL 9/16 NF X 1.75 OL - AA1J		
S	316860	WASHER		
T	316859	NUT – SLOTTED		
U	320060	BOLT – HEX FLG HD TFL M16 X 2 X 40-10.9-ZINC		
V	210918	WASHER – THRUST		
W	184708	WASHER – FLAT M8-200HV-AA1J		
X	136446	NUT – HEX SLTD FINE M24 X 1.5-SPCL-22HA-ZINC		
Y	30715	BOLT – HEX HD TFL M8 X 1.25 X 20-8.8-AA1J		
Z	327710	WASHER – THRUST		
AA	152702	BOLT – RHSN M12 X 1.75 X 30-8.8-AA1J		

508. The arm support assembly includes arm support (NSS) and two composite bushings (MD #210690).
509. The support assembly includes support (NSS), two composite bushings (MD #133992), and two composite bushings (MD #210690).
510. The pivot assembly includes pivot (NSS), two composite bushings (MD #210661), and two composite bushings (MD #327600).

125 (Option) EasyMove™ – Slow Speed Transport, Wheels, Tires, and Tow Poles

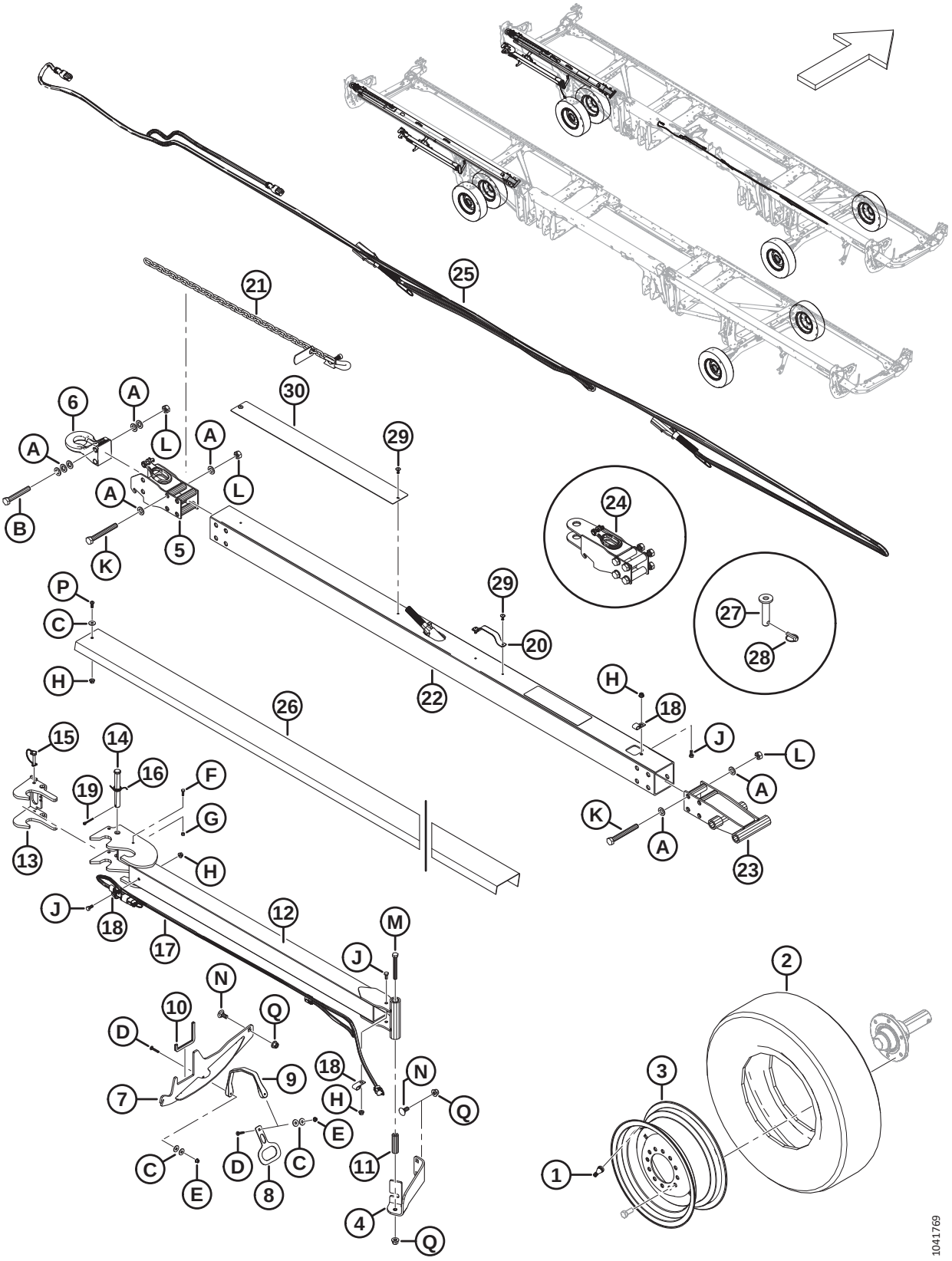

Ref	Part Number	Description	Qty	Serial Number
	B7398	EASYMOVE SLOW SPEED TRANSPORT – WHEELS AND TIRES [511]		
1	230968	STEM – TIRE VALVE ASSY #TR-416	2	
2	327808	TIRE – ST 225/75 R15 LRF	2	
3	327807	WHEEL – 15 X 6 WHITE [512]	2	
	144531	WHEEL – 15 X 6 LB [513]	A/R	
	327802	DECAL – TIRE PRESSURE, 655 KPA (95 PSI) [514]	2	
	327717	DECAL – TIRE PRESSURE, 552 KPA (80 PSI) [515]	A/R	
	C2173	EASYMOVE SLOW SPEED TRANSPORT – LONG TOW POLE [511]		
	B7392	EASYMOVE™ SLOW SPEED TRANSPORT – LONG TOW POLE [516]		
	B7391	EASYMOVE™ SLOW SPEED TRANSPORT – SHORT TOW POLE [516]		
4	327649	ANGLE – SUPPORT	1	
5	327694	HITCH – BASE	1	
6	113566	HITCH – PINTLE	1	
7	327771	WELDMENT – SUPPORT	1	
8	327304	PLATE – HANDLE	1	
9	193187	STRAP – RUBBER	1	
10	141220	SEAL – EDGE TRIM	1	
11	327294	TUBE	1	
12	327740	HITCH, EXTENSION – WELDT	1	
13	327739	LATCH – WELDT	1	
14	320213	PIN – CLEVIS	1	
15	320205	PIN – LYNCH DIA 5/16 IN. X 1.75 IN. LG W/ TETHER	1	
16	303169	SPRING – TORSION	1	
17	284549	HARNESS – TRANSPORT EXT HITCH	1	
18	39272	CLIP – INSULATED	3	
19	18608	PIN – COTTER 3/16 DIA X 1.5 ZP	1	
20	327563	HANDLE [517]	A/R	
21	327532	CHAIN – SAFETY	1	
22	327696	TUBE – HITCH, LONG[518]	1	
	327695	TUBE – HITCH, SHORT [518]	1	

511. Kits are available through Whole Goods only.
512. Wheel (MD #327807) is used with tire (MD #327808).
513. Wheel (MD #144531) remains available as a service part for superseded tire (MD #230483). Wheel (MD #144531) is **NOT** included in Wheels and Tires kit B7398.
514. Tire pressure decal (MD #327802) (655 kPa [95 psi]) is used with tire (MD #327808).
515. Tire pressure decal (MD #327717) (552 kPa [80 psi]) remains available as a service part for superseded tire (MD #230483).
516. The Short Tow-Bar kit is used for FD230 and FD235, Long Tow-Bar kit is used for FD240, FD241, FD245, and FD250. Kits are available through Whole Goods only.
517. Quantities: long tow pole (B7392) = 2, short tow pole (B7391) = 1.
518. The short tube hitch is used for FD230 and FD235, long tube hitch is used for FD240, FD241, FD245, and FD250. Kits are available through Whole Goods only.

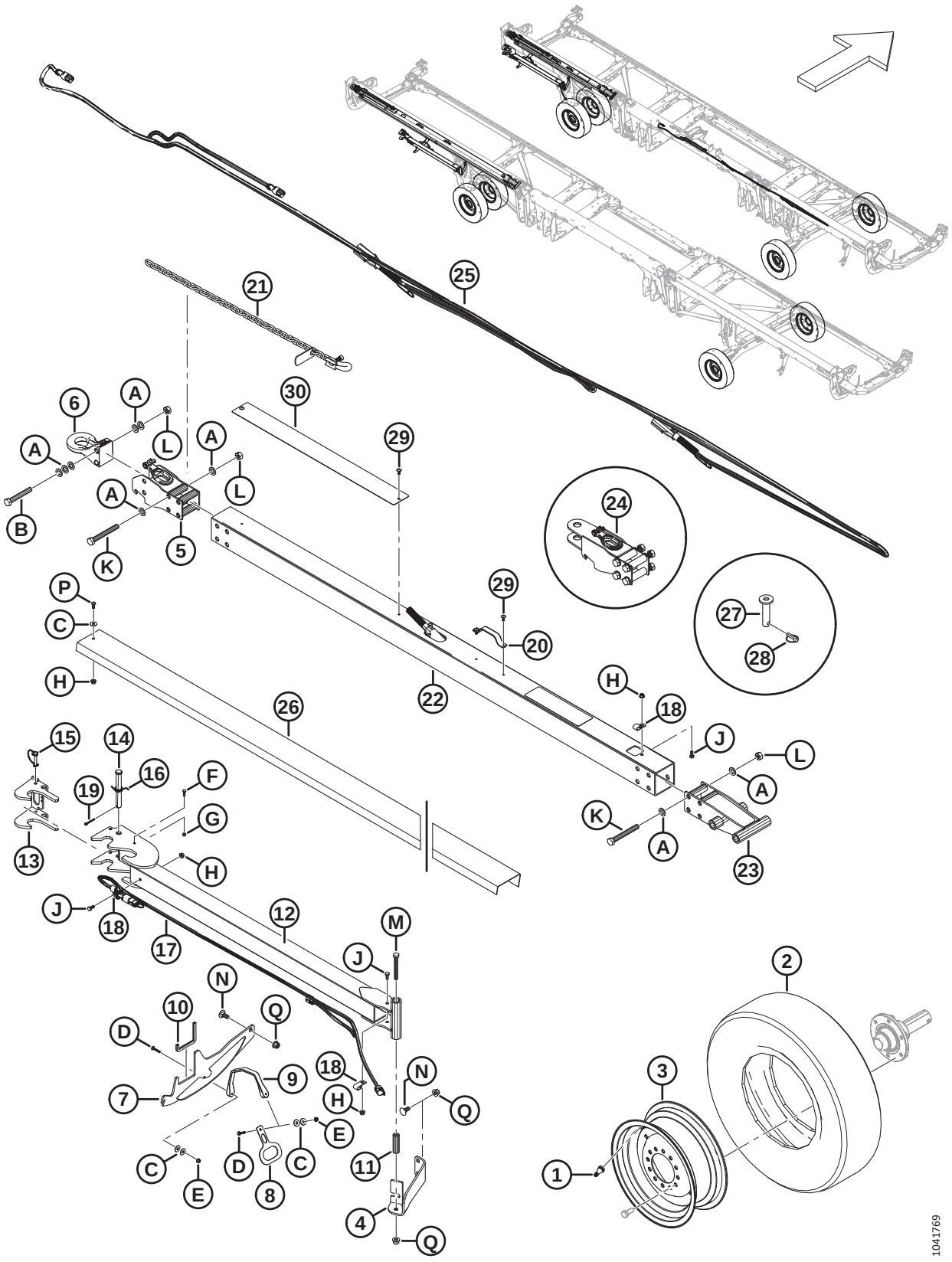
1041769

Ref	Part Number	Description	Qty	Serial Number
23	327692	HITCH, END – WELDT	1	
24	327664	ASSY – CLEVIS HITCH	1	
25	284550	HARNESS – TRANSPORT LIGHTS	1	
26	327817	SUPPORT – CHANNEL, LONG [519]	1	
	327680	SUPPORT – CHANNEL, SHORT [519]	1	
27	118239	PIN – HITCH	1	
28	113561	PIN – LYNCH	1	
29	320039	RIVET – POP 4.8 MM X 27.2 MM [520]	A/R	
30	327659	PLATE – WEAR	1	
	327588	DECAL – HITCH DAMAGE HAZARD	1	
A	184717	WASHER – FLAT REG M16-200HV-AA1J		
B	184679	BOLT – HEX HD M16 X 2 X 110-10.9-AA1J		
C	184709	WASHER – FLAT LARGE M8-200HV		
D	184643	BOLT – RHSSN M6 X 1.0 X 35-8.8-AA1J		
E	152668	NUT – HEX FLG CTR LOC M6 X 1-8		
F	184646	BOLT – HEX HD TFL M6 X 1 X 20-8.8-AA1J		
G	136773	NUT – HEX CTR LOC M6 X 1-8-AA1J		
H	135337	NUT – HEX FLG CTR LK M8 X 1.25-8-AA1J		
J	30715	BOLT – HEX HD TFL M8 X 1.25 X 20-8.8-AA1J		
K	320219	BOLT – HEX HD M16 X 2 X 130-12.9-ZINC		
L	320208	NUT – HEX TOP LOCK M16 X 2-12-ZINC		
M	184672	BOLT – HEX HD M12 X 1.75 X 100-10.9-AA1J		
N	184667	BOLT – RHSN M12 X 1.75 X 30-8.8-ZINC		
P	320176	SCREW – HEX SOC BTN HD M8 X 1.25 X 20-10.9-AA1J		
Q	136431	NUT – HEX FLG CTR LOC M12 X 1.75-10		

519. The short support channel is used for FD230 and FD235, long support channel is used for FD240, FD241, FD245, and FD250. Kits are available through Whole Goods only.
520. Quantities: long tow pole (B7392) = 6, short tow pole (B7391) = 4.

126 (Option) Endshield Conversion Kits

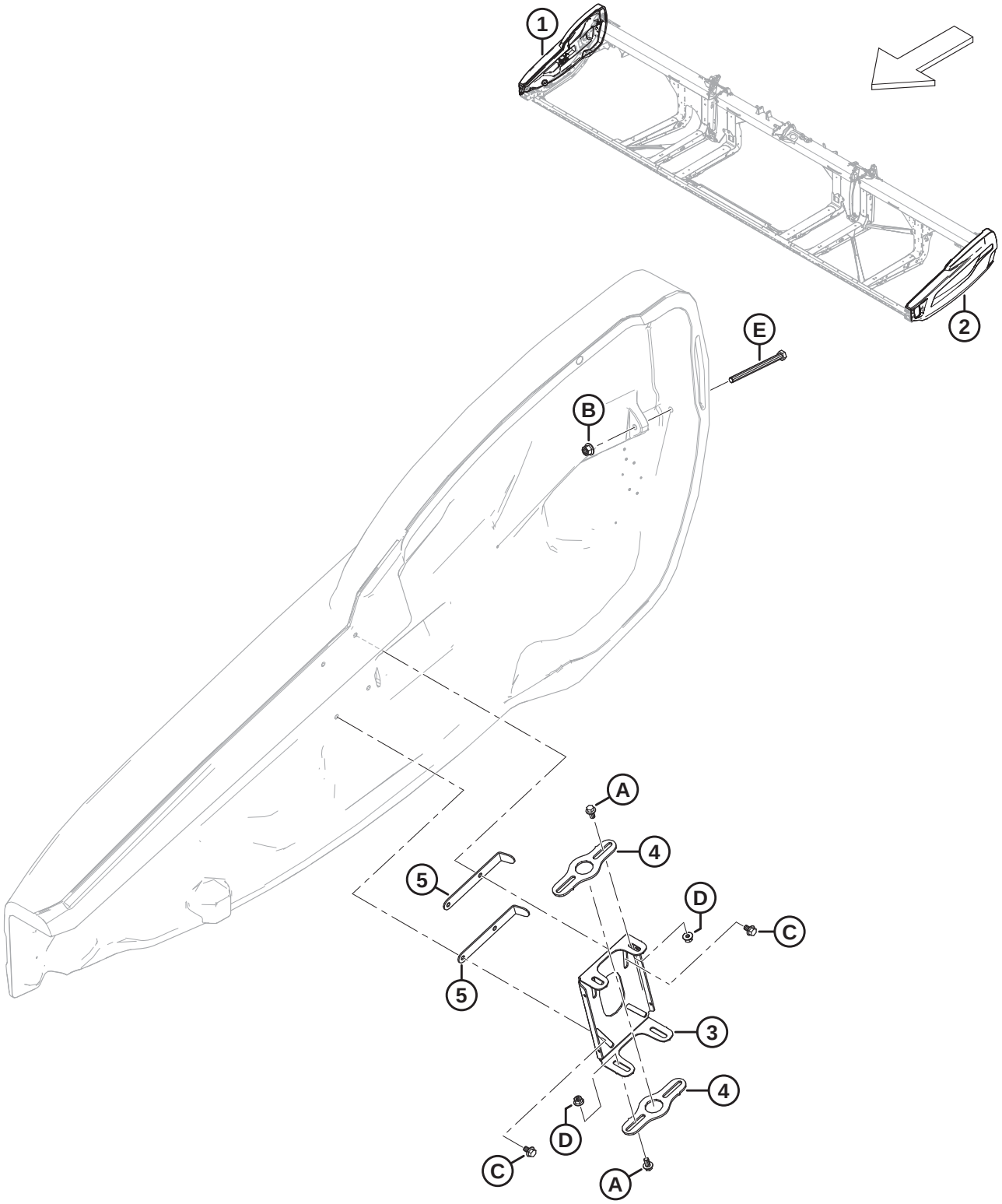

1039667

(OPTION) ENDSHIELD CONVERSION KITS

NOTE:

The endshields in these conversion kits are shipped with common decals only. To order individual product identification decals, refer to the sections specified in the footnotes for each endshield. To order reflectors for the right endshields, refer to Section *108 Decals and Reflectors – FD2 Series, page 259*.

Ref	Part Number	Description	Qty	Serial Number
	B7401	KIT – BLACK ENDSHIELD CONV [521]		
	B7402	KIT – RED ENDSHIELD CONV [521]		
	B7403	KIT – YELLOW ENDSHIELD CONV [521]		
1	360555	SHIELD ASSY – BLACK, RH [522]	1	
	360448	SHIELD ASSY – CIH AG RED, RH [523]	1	
	360449	SHIELD ASSY – NH YELLOW, RH [524]	1	
2	360554	SHIELD ASSY – BLACK, LH [522]	1	
	360552	SHIELD ASSY – CIH AG RED, LH [523]	1	
	360553	SHIELD ASSY – NH YELLOW, LH [524]	1	
3	313432	PIVOT – SHIELD RH	1	
	313303	PIVOT – SHIELD LH	1	
4	313304	PIVOT	4	
5	313783	RETAINER	4	
A	152655	BOLT – HEX FLG HD M10 X 1.5 X 20-8.8-AA1J		
B	136431	NUT – HEX FLG CTR LOC M12 X 1.75-10		
C	136231	BOLT – HEX SER FLG HD M10 X 1.5 X 16 X SPCL-8.8		
D	135799	NUT – HEX FLG CTR LOC M10 X 1.5-10		
E	135696	BOLT – HEX HD M12 X 1.75 X 150-8.8-AA1J		

521. Kits are available through Whole Goods only.
522. Refer to Section *109 Decals – Product Identification, page 261* for MacDon product identification decals.
523. Refer to Section *110 Decals – Product Identification, Case, page 263* for Case product identification decals.
524. Refer to Section *111 Decals – Product Identification, New Holland, page 267* for New Holland product identification decals.

127 (Option) Flex Linkage Stop Repair

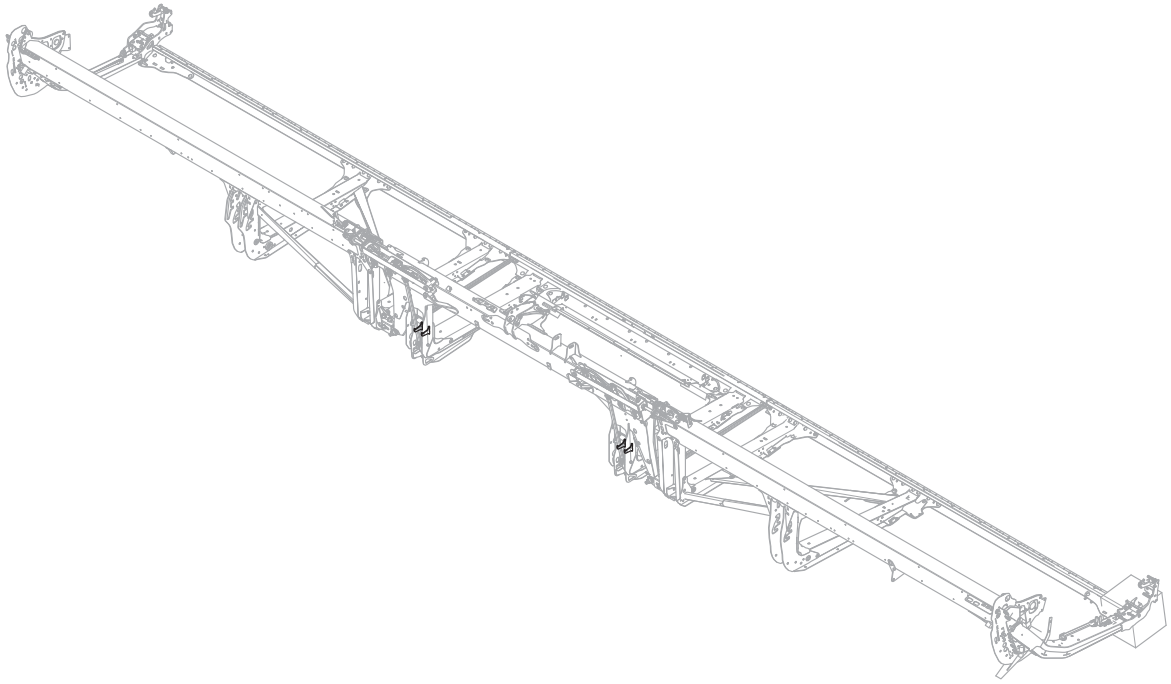

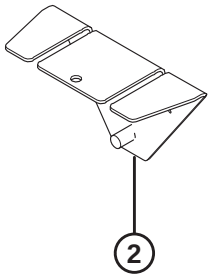

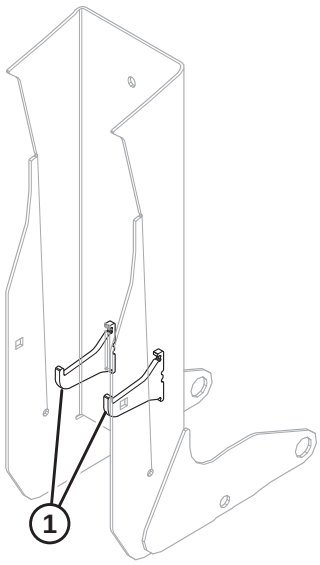

1042461

(OPTION) FLEX LINKAGE STOP REPAIR

IMPORTANT:

By receiving and installing this part, you assume all risk and liability of any nature arising out of the installation of this part. MacDon Industries Ltd. and its affiliates disclaim any and all liability arising from the installation of this part. Weld template (MD #360871) is available to simplify locating the stops. Welding should be performed by an individual certified by an accredited institute in your jurisdiction with the necessary welding qualifications and/or certifications.

Ref	Part Number	Description	Qty	Serial Number
1	360869	KIT – FLEX LINKAGE STOP REPAIR	1	
2	360871	TOOL – WELDT TEMPLATE	1	

128 (Option) Floating Crop Dividers

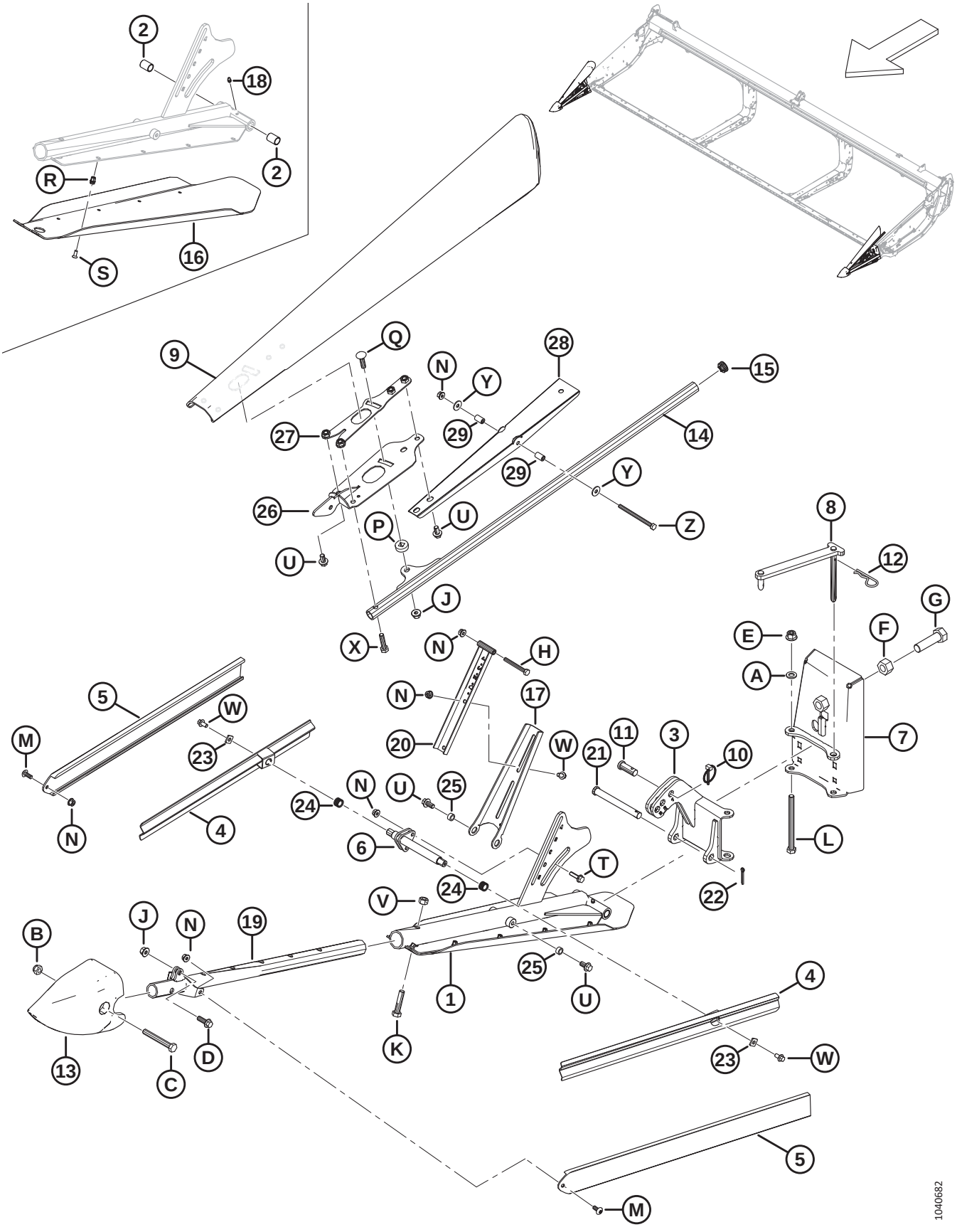

(OPTION) FLOATING CROP DIVIDERS

Ref	Part Number	Description	Qty	Serial Number
	B7346	KIT – FLOATING END DIVIDERS [525]		
1	360072	ASSY – LH SHOE SUPPORT [526]	1	
	360114	ASSY – RH SHOE SUPPORT [527]	1	
2	258391	BUSHING	4	
3	360079	HINGE WELDT – LH	1	
	360119	HINGE WELDT – RH	1	
4	360077	RAIL – DEFLECTOR WELDT	4	
5	360122	DEFLECTOR – EXTRUDED	4	
6	360106	WELDT – SIDE SUPPORT	2	
7	360069	REAR PLATE WELDT – LH	1	
	360134	REAR PLATE WELDT – RH	1	
8	360004	LINK WELDT – LH	1	
	360168	LINK WELDT – RH	1	
9	360723	DEFLECTOR – LH	1	
	360939	KIT – DEFLECTOR, LH [528]	A/R	
	360848	DEFLECTOR – RH	1	
	360940	KIT – DEFLECTOR, RH [529]	A/R	
10	102264	PIN – LYNCH 3/16 X 1 9/16 IN.	2	
11	18619	PIN – CLEVIS	2	
12	13125	PIN – HAIR	2	
13	313461	CONE – DIVIDER	2	
14	360103	TUBE – WELDMENT	2	
15	335301	PLUG – PLASTIC, SNAP-IN	2	
16	340212	SHOE – LH	1	
	340210	SHOE – RH	1	
17	360110	SUPPORT – LH TOP DEFLECTOR	1	
	360120	SUPPORT – RH TOP DEFLECTOR	1	
18	18671	FITTING – LUBE 1/4-28 UNF	2	
19	360076	SUPPORT WELDT – FRONT	2	
20	360108	DEFLECTOR SUPPORT	2	
21	49378	PIN – CLEVIS	2	
22	18648	PIN – COTTER 3/16 DIA X 1.25 ZP	2	
23	233841	SUPPORT – DEFLECTOR	4	
24	26429	SPRING – COMPRESSION	4	

525. Kits are available through Whole Goods only.
526. The assembly includes LH support weldment (NSS), LH shoe (MD #340212), grease fitting (MD #18671), two bushings (MD #258391), ten screws (MD #320220), and ten rivnuts (MD #320404).
527. The assembly includes RH support weldment (NSS), RH shoe (MD #340210), grease fitting (MD #18671), two bushings (MD #258391), ten screws (MD #320220), and ten rivnuts (MD #320404).
528. The LH Deflector kit is used to service superseded LH deflector (MD #360095). The kit Includes deflector channel (MD #360850), left retainer (MD #360734), left deflector (MD #360723), left support (MD #360720), two pivot tubes (MD #360847), hardware, and instructions.
529. The RH Deflector kit is used to service superseded RH deflector (MD #360081). The kit includes deflector channel (MD #360850), right retainer (MD #360863), right deflector (MD #360848), right support (MD #360862), two pivot tubes (MD #360847), hardware, and instructions.

(OPTION) FLOATING CROP DIVIDERS

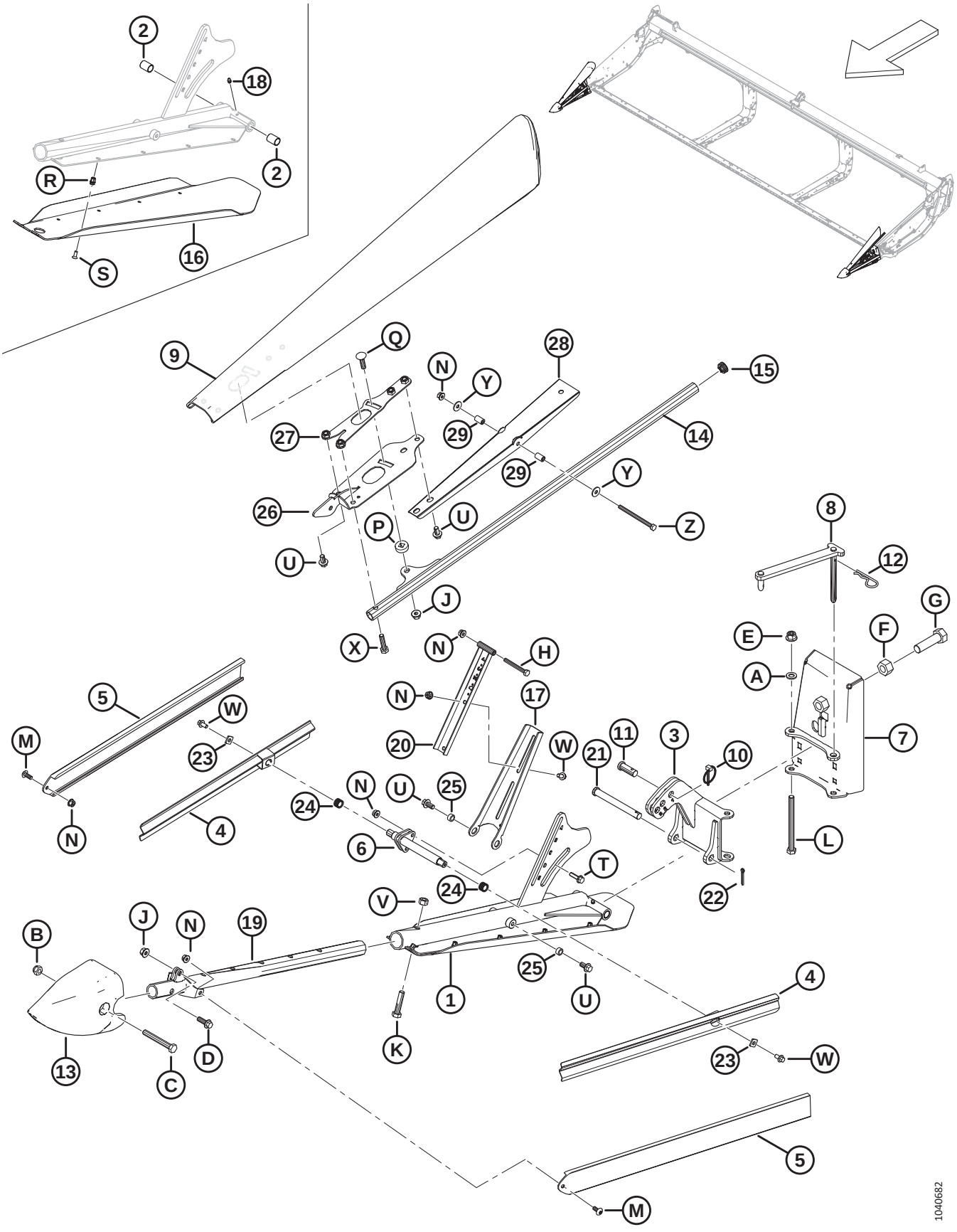

Ref	Part Number	Description	Qty	Serial Number
25	19542	SPACER	4	
26	360720	SUPPORT – LH WELDMENT	1	
	360862	SUPPORT – RH WELDMENT	1	
27	360734	RETAINER – LH WELDMENT	1	
	360863	RETAINER – RH WELDMENT	1	
28	360850	CHANNEL – TOP DEFLECTOR	2	
29	360847	TUBE – PIVOT	4	
A	184714	WASHER – FLAT REG M12-300HV		
B	184695	NUT – HEX NYLOC M12 X 1.75-8-AA1J		
C	184673	BOLT – HEX HD M12 X 1.75 X 90-10.9-AA1J		
D	184665	BOLT – HEX FLG HD M10 X 1.5 X 30-10.9-AA1J		
E	136431	NUT – HEX FLG CTR LOC M12 X 1.75-10		
F	136342	NUT – HEX FINE M20 X 1.5 X 10-AA3L		
G	136339	BOLT – HEX HD FINE TFL M20 X 1.5 X 70 X 8.8-ZINC		
H	184656	BOLT – HEX HD M8 X 1.25 X 70-8.8-AA1J		
J	135799	NUT – HEX FLG CTR LOC M10 X 1.5-10		
K	152779	BOLT – HEX HD M12 X 1.75 X 55-8.8-AA1J		
L	135696	BOLT – HEX HD M12 X 1.75 X 150-8.8-AA1J		
M	320190	SCREW – TORX TRUSS HD M8 X 1.25 X 20-SPCL-8.8-ZINC		
N	135337	NUT – HEX FLG CTR LK M8 X 1.25-8-AA1J		
P	360105	WASHER – SPECIAL		
Q	152732	BOLT – RHSN M10 X 1.5 X 40-8.8-AA1J		
R	320404	RIVNUT – M6 X 1.0 HEX 1.0-3.5		
S	320220	SCREW – TORX CSK HD TFL M6 X 1 X 16-SPCL-8.8-ZINC		
T	252655	BOLT – HEX FLG HD TFL M8 X 1.25 X 30-8.8-AA1J		
U	152655	BOLT – HEX FLG HD M10 X 1.5 X 20-8.8-AA1J		
V	136759	NUT – HEX CTR LOC M12 X 1.75-8-AA1J		
W	136485	BOLT – HEX FLG HD TFL M8 X 1.25 X 16-8.8-AA1J		
X	135319	BOLT – HEX HD M10 X 1.5 X 40-8.8-AA1J		
Y	184709	WASHER – FLAT LARGE M8-200HV		
Z	135523	BOLT – HEX HD M8 X 1.25 X 110-8.8-AA1J		

129 (Option) Four-Point Guard Kits, Single Knife

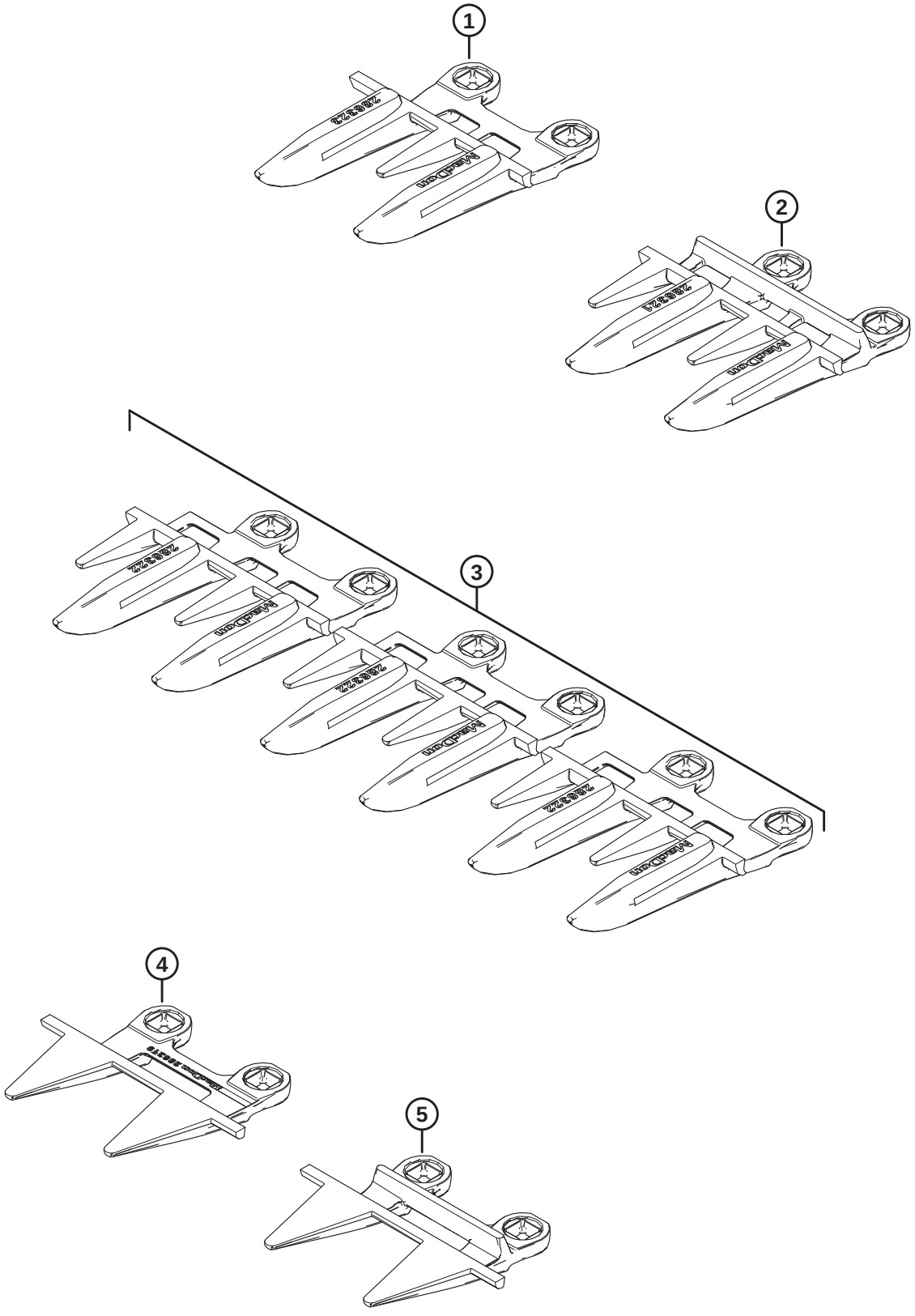

1039619

(OPTION) FOUR-POINT GUARD KITS, SINGLE KNIFE

Ref	Part Number	Description	Qty	Serial Number
	286690	KIT – 4 POINT GUARDS 25 FT SK		
	286691	KIT – 4 POINT GUARDS 30 FT SK		
	286692	KIT – 4 POINT GUARDS 35 FT SK		
	286693	KIT – 4 POINT GUARDS 40 FT SK		
1	286323	KNIFE GUARD – 4-POINT SPECIAL [530]	1	
2	286321	KNIFE GUARD – 4-POINT [531]		
3	286322	KNIFE GUARD – 4-POINT END [532]	3	
4	286319	KNIFE GUARD – PLUGFREE END [532]	1	
5	286318	KNIFE GUARD – PLUGFREE [530]	1	

530. Used at the right end of the header.
531. Quantities: FD225 = 44, FD230 = 54, FD235 = 64, FD240 = 74.
532. Used at the drive end of the header.

130 (Option) Four-Point Guard Kits, Double Knife

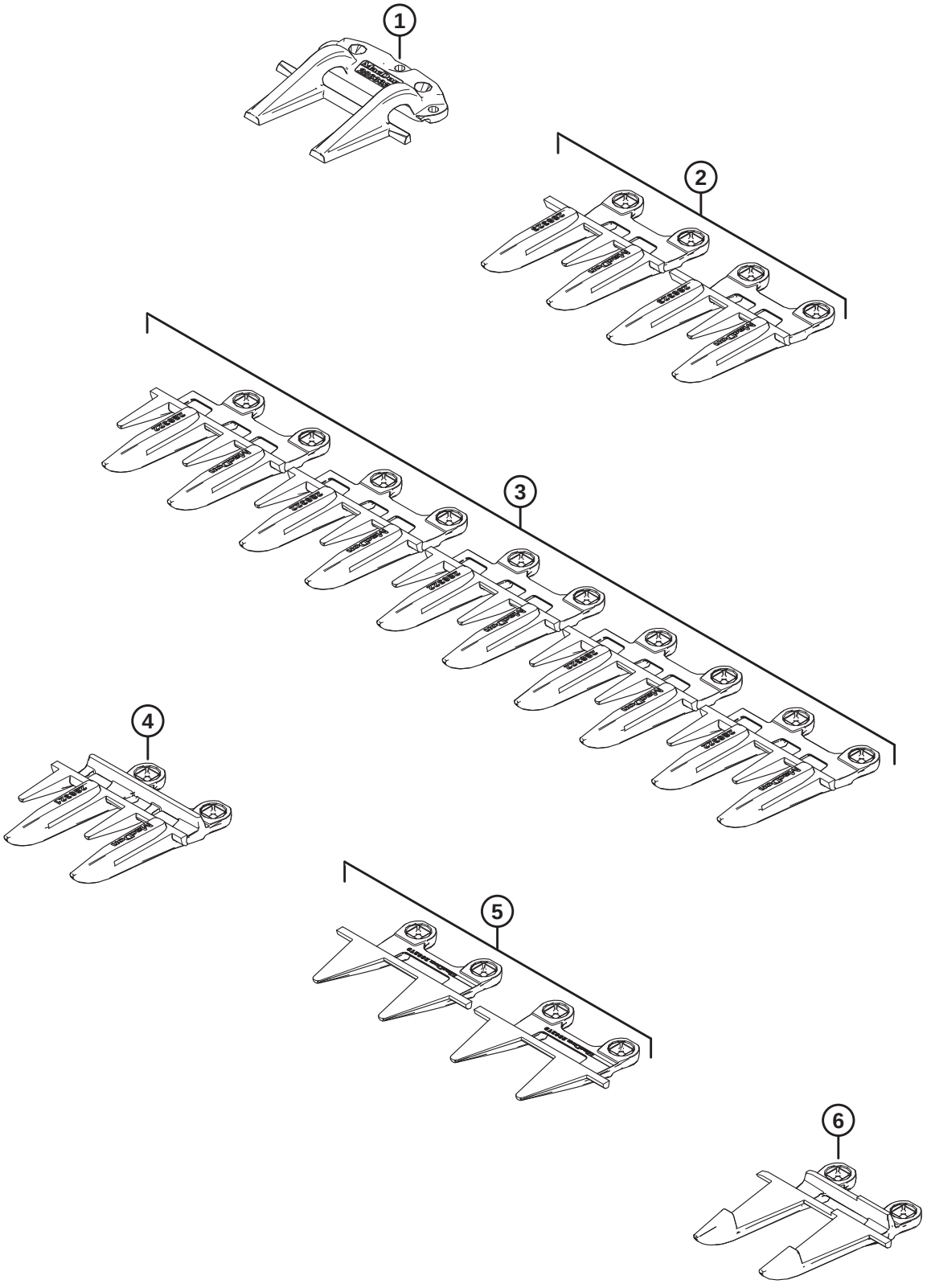

1039618

(OPTION) FOUR-POINT GUARD KITS, DOUBLE KNIFE

Ref	Part Number	Description	Qty	Serial Number
	286683	KIT – 4 POINT GUARDS 25 FT DK		
	286684	KIT – 4 POINT GUARDS 30 FT DK		
	286685	KIT – 4 POINT GUARDS 35 FT DK		
	286686	KIT – 4 POINT GUARDS 40 FT DK		
	286687	KIT – 4 POINT GUARDS 41 FT DK		
	286688	KIT – 4 POINT GUARDS 45 FT DK		
	286689	KIT – 4 POINT GUARDS 50 FT DK		
1	286332	HOLD-DOWN – POINTED CENTER [533]	1	
2	286323	KNIFE GUARD – 4-POINT SPECIAL [534]	2	
3	286322	KNIFE GUARD – 4-POINT END [535]	5	
4	286321	KNIFE GUARD – 4-POINT [536]		
5	286319	KNIFE GUARD – PLUGFREE END [537]	2	
6	286317	KNIFE GUARD – POINTED CENTER [533]	1	

533. Used near the center of the header.
534. One 4-point special knife guard is used at the right end of the header, and to the left of the pointed center knife guard and pointed center hold-down.
535. Three 4-point end knife guards are used at the drive end of the header, and two 4-point end knife guards are used at the right end of the header.
536. Quantities: FD225 = 40, FD230 = 50, FD235 = 60, FD240 = 70, FD241 = 72, FD245 = 80, FD250 = 90.
537. One PlugFree™ end knife guard is used at each end of the header.

131 (Option) Header Tilt Foot Switch

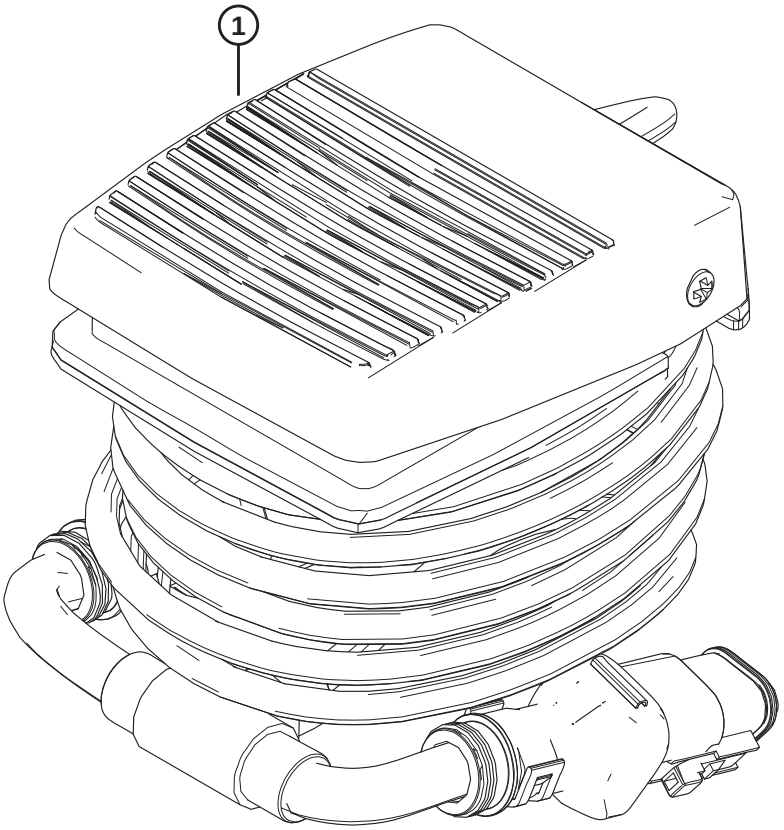

1035065

(OPTION) HEADER TILT FOOT SWITCH

Ref	Part Number	Description	Qty	Serial Number
	B7040	KIT – FOOTSWITCH TILT/FOREAFT [538]		
1	314581	HARNESS – FOOT PEDAL	1	
	335563	DECAL – CONTOUR WHL FT SWITCH	1	
	335564	DECAL – TILT CONTROL FOOT SW	1	

538. Optional in-cab foot switch is used to activate header tilt for John Deere and Challenger®, Gleaner®, IDEAL™, and Massey Ferguson® combines. Kits are available through Whole Goods only.

132 (Option) High Wear Skid Shoes

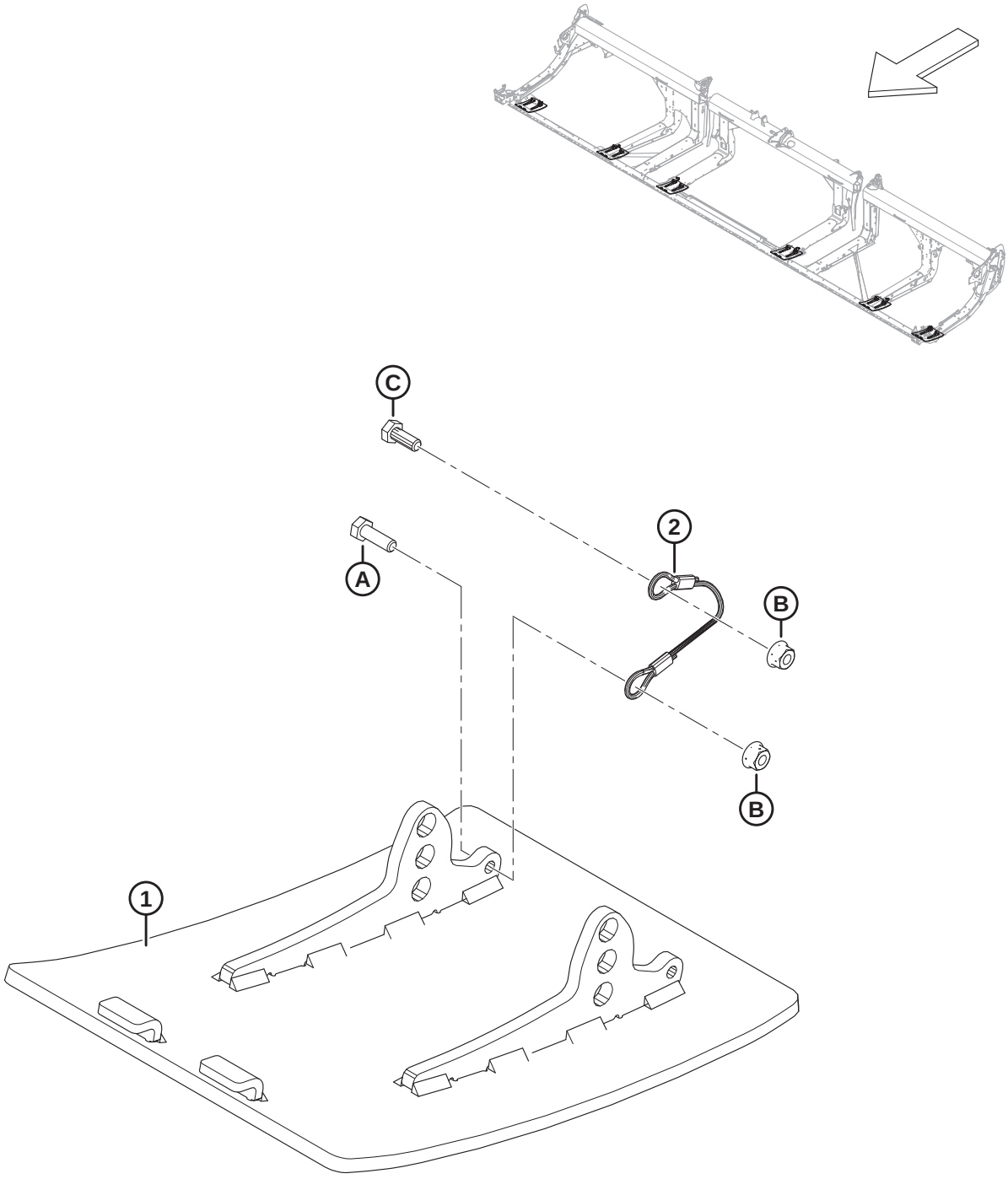

1034768

(OPTION) HIGH WEAR SKID SHOES

Ref	Part Number	Description	Qty	Serial Number
	B6801	KIT – HIGH WEAR, ABRASION RESISTANT STEEL SKID SHOES [539]		
1	313374	WELDT – HIGH WEAR SHOE	2	
2	312673	CABLE – STOP	2	
A	184652	BOLT – HEX HD TFL M8 X 1.25 X 25-8.8-AA1J		
B	135337	NUT – HEX FLG CTR LK M8 X 1.25-8-AA1J		
C	30715	BOLT – HEX HD TFL		

539. The kit includes two high wear steel skid shoes, two cable stops, hardware, and instructions. Two kits are required for FD225 headers. Three kits are required for FD230 and larger headers. Kits are available through Whole Goods only.

133 (Option) Lodged Crop Reel Fingers

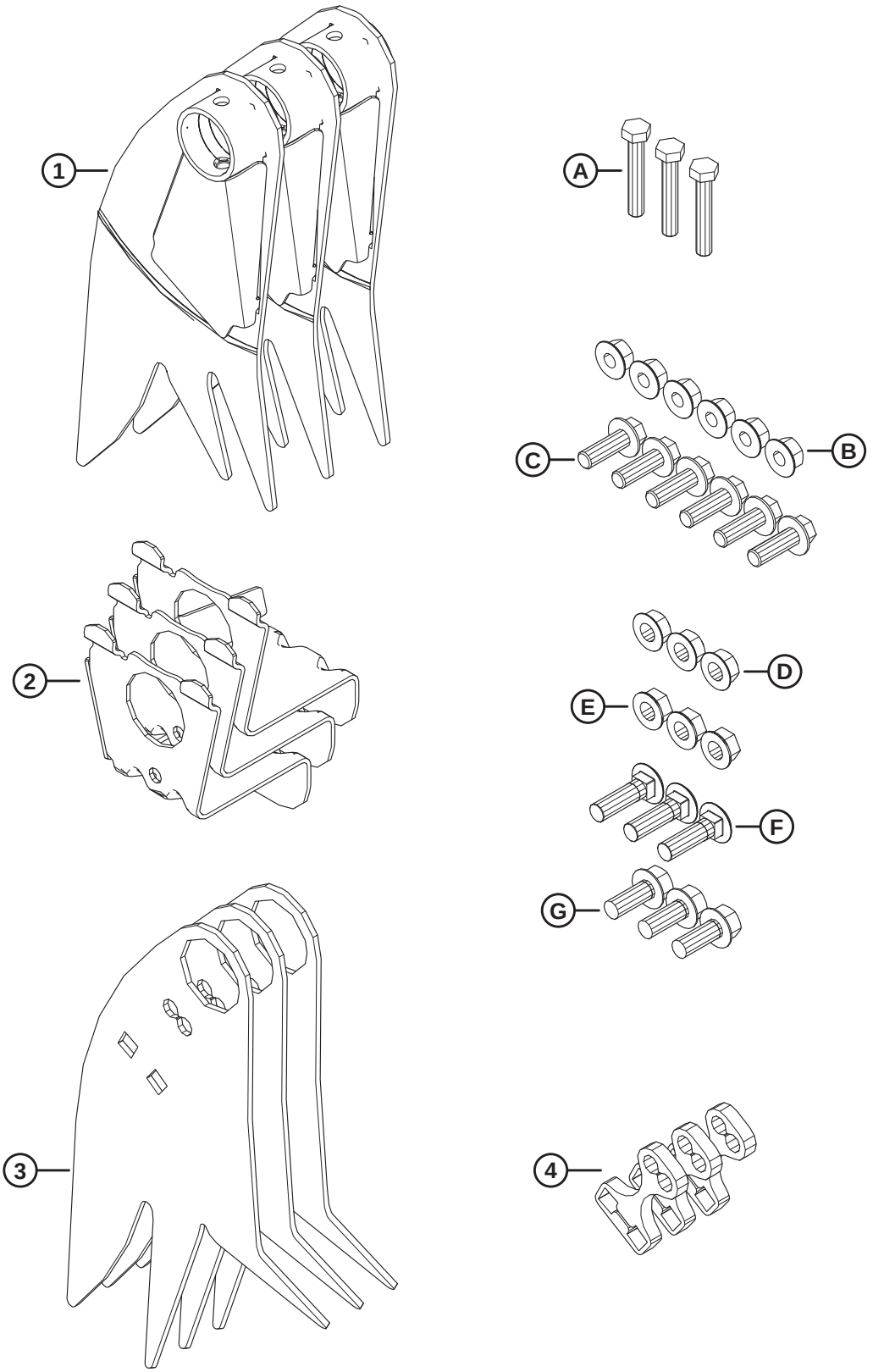

1041518

(OPTION) LODGED CROP REEL FINGERS

Ref	Part Number	Description	Qty	Serial Number
	B7230	KIT – LODGED CROP FINGER [540]		
1	360045	WELDT – TAIL END RIGID FINGER	3	
2	340091	SUPPORT – WELDT	3	
3	360044	FINGER – RIGID	3	
4	273615	SHIM	3	
A	184664	BOLT – HEX HD M10 X 1.5 X 60-8.8-AA1J		
B	184697	NUT – HEX SER FLG M12 X 1.75-8-AA1J		
C	152731	BOLT – HEX FLG HD TFL M12 X 1.75 X 35-10.9-AA1J		
D	21383	NUT – FLG SER FACE 1/2-13 UNC GR5 AA1J		
E	50186	NUT – FLG LK DT 1/2-13 UNC GR5 AA1J		
F	30515	BOLT – RHSN 1/2-13 X 1.75-GR5-AA1J		
G	30368	BOLT – HH FLG SER 1/2-13 X 1.25-GR5-AA1J		

540. The Lodged Crop Reel Fingers kit includes three fingers for the cam end of the reel, three fingers for the tail end of the reel, three supports, three shims, all listed hardware, and instructions. Lodged crop reel fingers are **NOT** compatible with the Wide Draper Deflector kit. Kits are available through Whole Goods only.

134 (Option) Reel Tine Tube Conversion Kits – Double Reel, 5 Bat to 6 Bat

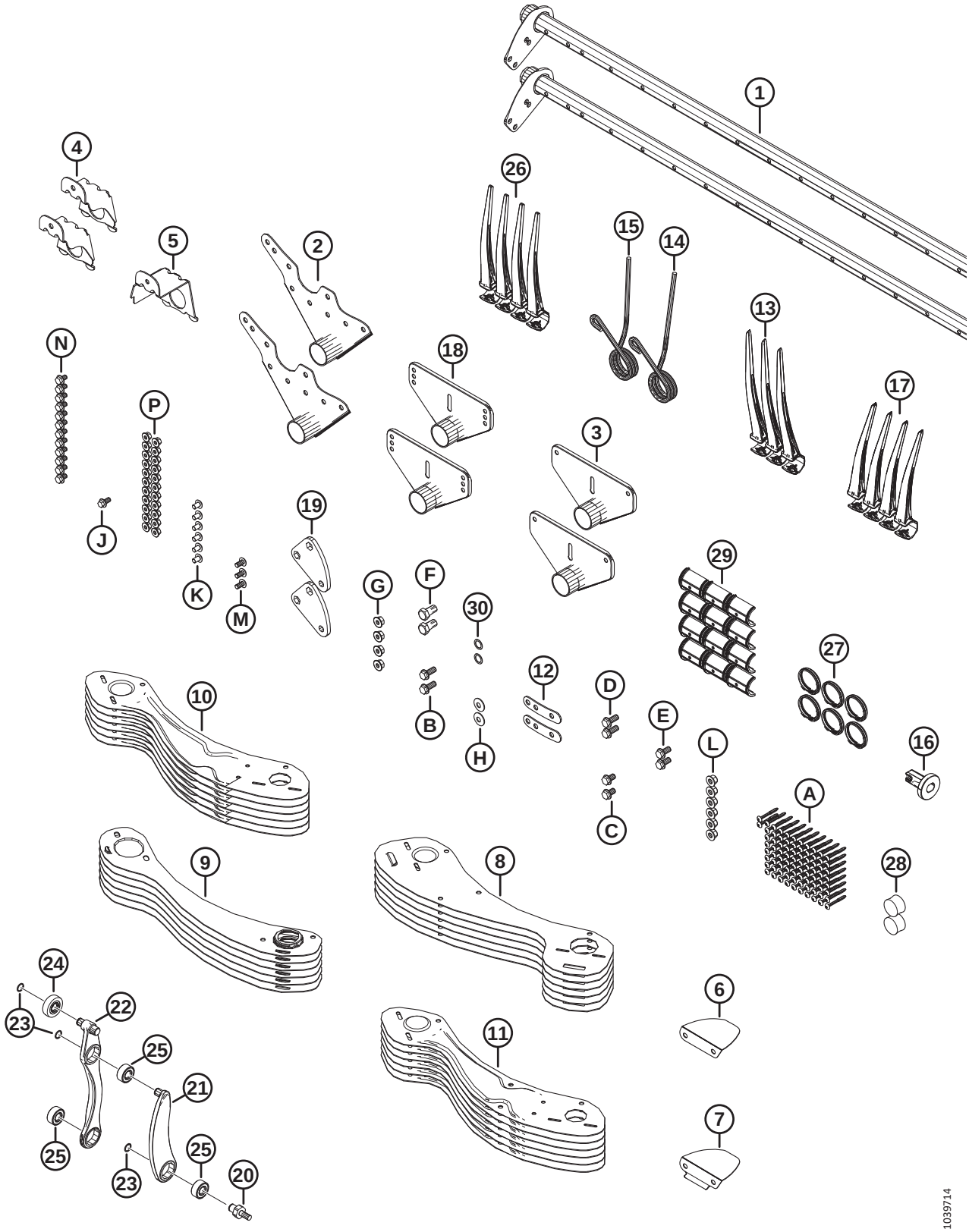

(OPTION) REEL TINE TUBE CONVERSION KITS – DOUBLE REEL, 5 BAT TO 6 BAT

Ref	Part Number	Description	Qty	Serial Number
	B7357	KIT – 30FT DR 5B TO 6B CONV. [541]		
	B7358	KIT – 35FT DR 5B TO 6B CONV. [541]		
	B7359	KIT – 41FT DR 5B TO 6B CONV. [541]		
1	311365	TINE TUBE – 30FT DR WIDE	2	
	311210	TINE TUBE – 35FT DR WIDE	2	
	311306	TINE TUBE – 41FT DR WIDE	2	
2	335924	ARM WELDT – CAM END	2	
3	311347	ARM WELDT – TAIL END	2	
4	311964	SUPPORT – WELDT CAM END	2	
5	311965	SUPPORT – WELDT TAIL END [542]	1	
6	311906	DEFLECTOR – CAM INBOARD	1	
7	311729	DEFLECTOR – CAM OUTBOARD	1	
8	273813	SHIELD – 6 BAT LH REEL CAM END	6	
9	311822	SHIELD – 6 BAT RH REEL TAIL END	6	
10	311753	SHIELD – OUTBOARD LH 6 BAT	6	
11	311752	SHIELD – OUTBOARD RH 6 BAT	6	
12	311672	STRAP	2	
13	360540	FINGER – PLASTIC, LH ANGLED, 45 MM (PKG OF 10) [543]		
14	311327	FINGER – CAM END BENT	1	
15	311325	FINGER – CAM END OUTBOARD	1	
16	273968	BUSHING – ENDSHIELD	1	
17	311523	FINGER – PLASTIC, RH ANGLED, 52 MM (PKG OF 10)	4	
18	273523	ARM WELDT – MID SPAN [544]		
19	228319	ARM – CRANK MACHINING	2	
20	340146	STUD	2	
21	311615	ARM – ASSEMBLY [545]	2	
22	311617	ARM – TINE CONTROL ASSY [546]	2	
23	273536	RING – RETAINING	6	
24	273524	BEARING – CAM FOLLOWER	2	
25	273347	BEARING	6	
26	174849	FINGER – PLASTIC HEAVY DUTY (PKG OF 10) [547]		
27	220941	CLAMP – TINE TUBE BUSHING-CENTER RIB (BOX OF 5) [548]		
28	137980	PLUG – TINE TUBE [549]		
29	220939	TINE TUBE BUSHING (BOX OF 25) [550]		

541. Kits are available through Whole Goods only.
542. FD230 only.
543. Quantities: FD230 = 3, FD235 = 2, FD241 = 2.
544. Quantities: FD230 = 2, FD235 = 4, FD241 = 4.
545. The arm assembly includes one retaining ring (MD #273536) and one bearing (MD #273347).
546. The tine control arm assembly includes two retaining rings (MD #273536), one cam follower bearing (MD #273524), and two bearings (MD #273347).
547. Quantities: FD230 = 76, FD235 = 89, FD241 = 106.
548. Quantities: FD230 = 6, FD235 = 8, FD241 = 8
549. Quantities: FD230 = 2, FD235 = 3, FD241 = 3.
550. Quantities: FD230 = 12, FD235 = 16, FD241 = 16.

(OPTION) REEL TINE TUBE CONVERSION KITS – DOUBLE REEL, 5 BAT TO 6 BAT

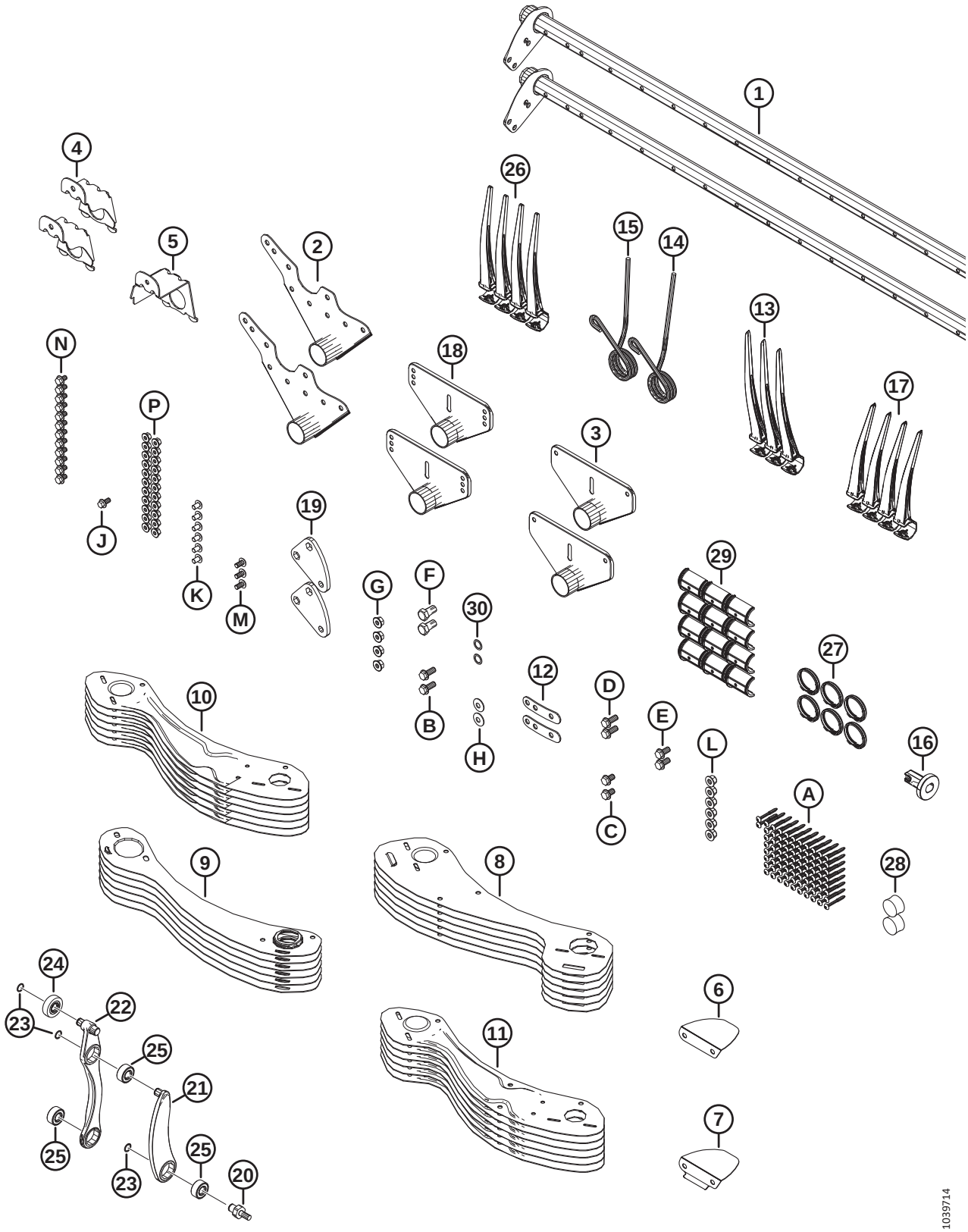

(OPTION) REEL TINE TUBE CONVERSION KITS – DOUBLE REEL, 5 BAT TO 6 BAT

Ref	Part Number	Description	Qty	Serial Number
30	137529	SHIM – CRANK BEARING	2	
A	252687	SCREW – 48° PLASTITE TWIN HELIX		
B	320192	BOLT – HEX FLG HD M12 X 1.75 X 30-SPCL-8.8-ZINC		
C	320187	BOLT – HEX FLG HD M12 X 1.75 X 20-SPCL-8.8-ZINC		
D	320180	BOLT – HEX FLG HD M12 X 1.75 X 30-SPCL-8.8-ZINC		
E	320175	BOLT – HEX FLG HD TFLM12 X 1.75 X 25-SPCL-8.8-ZINC		
F	228316	BOLT – HEX HD M16 X 1.5 X 30-SPCL-8.8-ZINC		
G	184697	NUT – HEX SER FLG M12 X 1.75-8-AA1J		
H	184597	WASHER – CON SPRING M12-ZINC		
J	152655	BOLT – HEX FLG HD M10 X 1.5 X 20-8.8-AA1J		
K	136640	SCREW – TORX TRUSS HD M10 X 1.5 X 16 X SPCL-8.8-AA1J		
L	136431	NUT – HEX FLG CTR LOC M12 X 1.75-10		
M	136395	SCREW – TORX TRUSS HD M10 X 1.5 X 20 X SPCL-8.8-A3L		
N	136151	BOLT – HEX FLG HD TFL M10 X 1.5 X 16-8.8-AA1J		
P	135799	NUT – HEX FLG CTR LOC M10 X 1.5-10		

135 (Option) Reel Tine Tube Conversion Kits – Double Reel, 6 Bat to 9 Bat

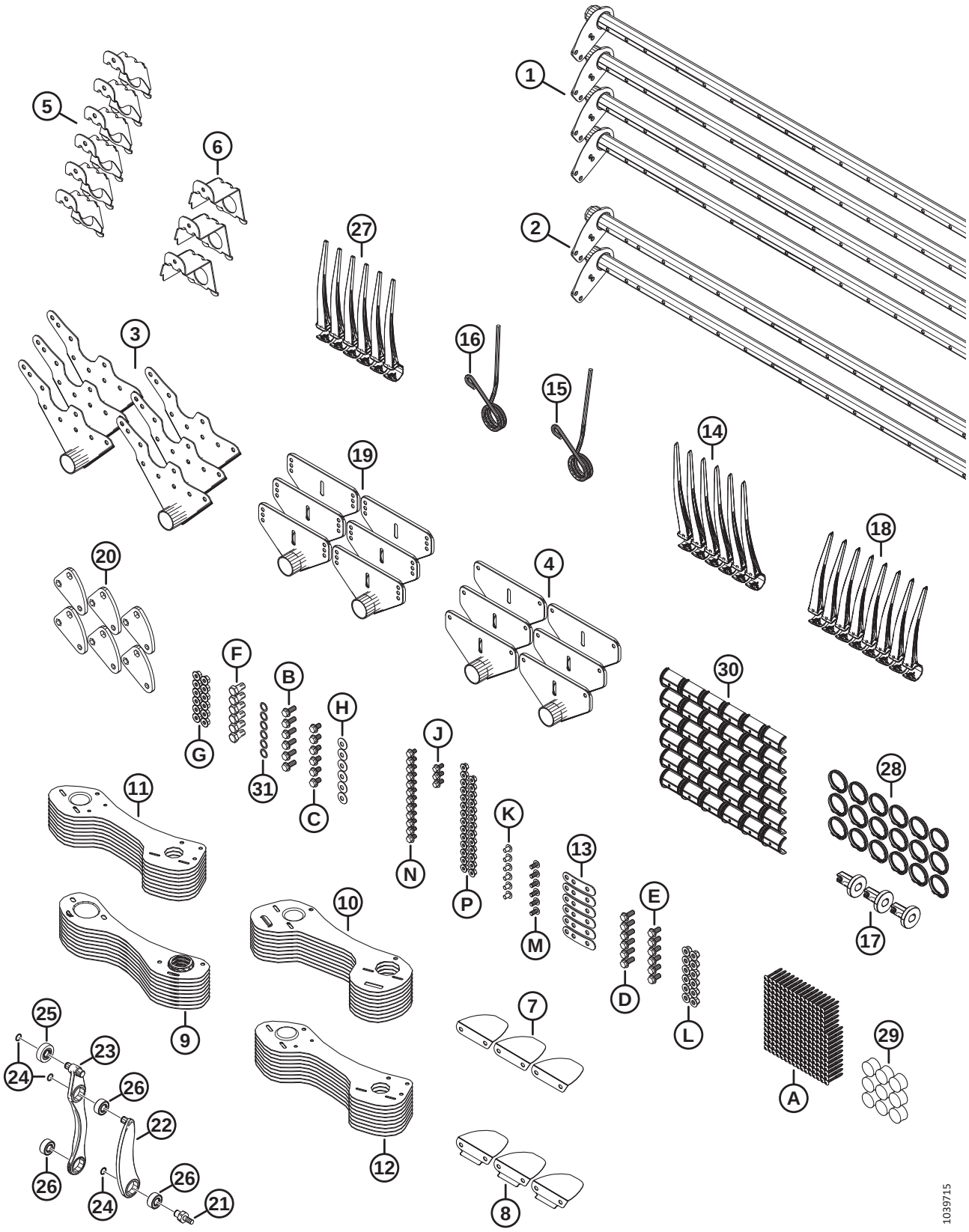

(OPTION) REEL TINE TUBE CONVERSION KITS – DOUBLE REEL, 6 BAT TO 9 BAT

Ref	Part Number	Description	Qty	Serial Number
	B7362	KIT – 30FT DR 6B TO 9B CONV. [551]		
1	311368	TINE TUBE – 30FT DR NARROW	4	
2	311365	TINE TUBE – 30FT DR WIDE	2	
3	335924	ARM WELDT – CAM END	6	
4	311347	ARM WELDT – TAIL END	6	
5	311964	SUPPORT – WELDT CAM END	6	
6	311965	SUPPORT – WELDT TAIL END	3	
7	311906	DEFLECTOR – CAM INBOARD	3	
8	311729	DEFLECTOR – CAM OUTBOARD	3	
9	311870	SHIELD – 9 BAT RH REEL, TAIL END	9	
10	311868	SHIELD – 9 BAT LH REEL, CAM END	9	
11	311864	SHIELD – OUTBOARD LH 9 BAT	9	
12	311863	SHIELD – OUTBOARD RH 9 BAT	9	
13	311672	STRAP	6	
14	360540	FINGER – PLASTIC, LH ANGLED, 45 MM (PKG OF 10)	6	
15	311327	FINGER – CAM END BENT	3	
16	311325	FINGER – CAM END OUTBOARD	3	
17	273968	BUSHING – ENDSHIELD	3	
18	311523	FINGER – PLASTIC, RH ANGLED, 52 MM (PKG OF 10)	8	
19	273523	ARM WELDT – MID SPAN	6	
20	228319	ARM – CRANK MACHINING	6	
21	340146	STUD	6	
22	311615	ARM – ASSEMBLY [552]	6	
23	311617	ARM – TINE CONTROL ASSY [553]	6	
24	273536	RING – RETAINING	18	
25	273524	BEARING – CAM FOLLOWER	6	
26	273347	BEARING	18	
27	174849	FINGER – PLASTIC HEAVY DUTY (PKG OF 10)	237	
28	220941	CLAMP – TINE TUBE BUSHING, CENTER RIB (BOX OF 5)	18	
29	137980	PLUG – TINE TUBE	9	
30	220939	TINE TUBE BUSHING (BOX OF 25)	36	
31	137529	SHIM – CRANK BEARING	6	
A	252687	SCREW – 48° PLASTITE TWIN HELIX		
B	320192	BOLT – HEX FLG HD M12 X 1.75 X 30-SPCL-8.8-ZINC		
C	320187	BOLT – HEX FLG HD M12 X 1.75 X 20-SPCL-8.8-ZINC		
D	320180	BOLT – HEX FLG HD M12 X 1.75 X 30-SPCL-8.8-ZINC		
E	320175	BOLT – HEX FLG HD TFL M12 X 1.75 X 25-SPCL-8.8-ZINC		
F	228316	BOLT – HEX HD M16 X 1.5 X 30-SPCL-8.8-ZINC		
G	184697	NUT – HEX SER FLG M12 X 1.75-8-AA1J		

551. Kits are available through Whole Goods only.
552. The arm assembly includes one retaining ring (MD #273536) and one bearing (MD #273347).
553. The tine control arm assembly includes two retaining rings (MD #273536), one cam follower bearing (MD #273524), and two bearings (MD #273347).

(OPTION) REEL TINE TUBE CONVERSION KITS – DOUBLE REEL, 6 BAT TO 9 BAT

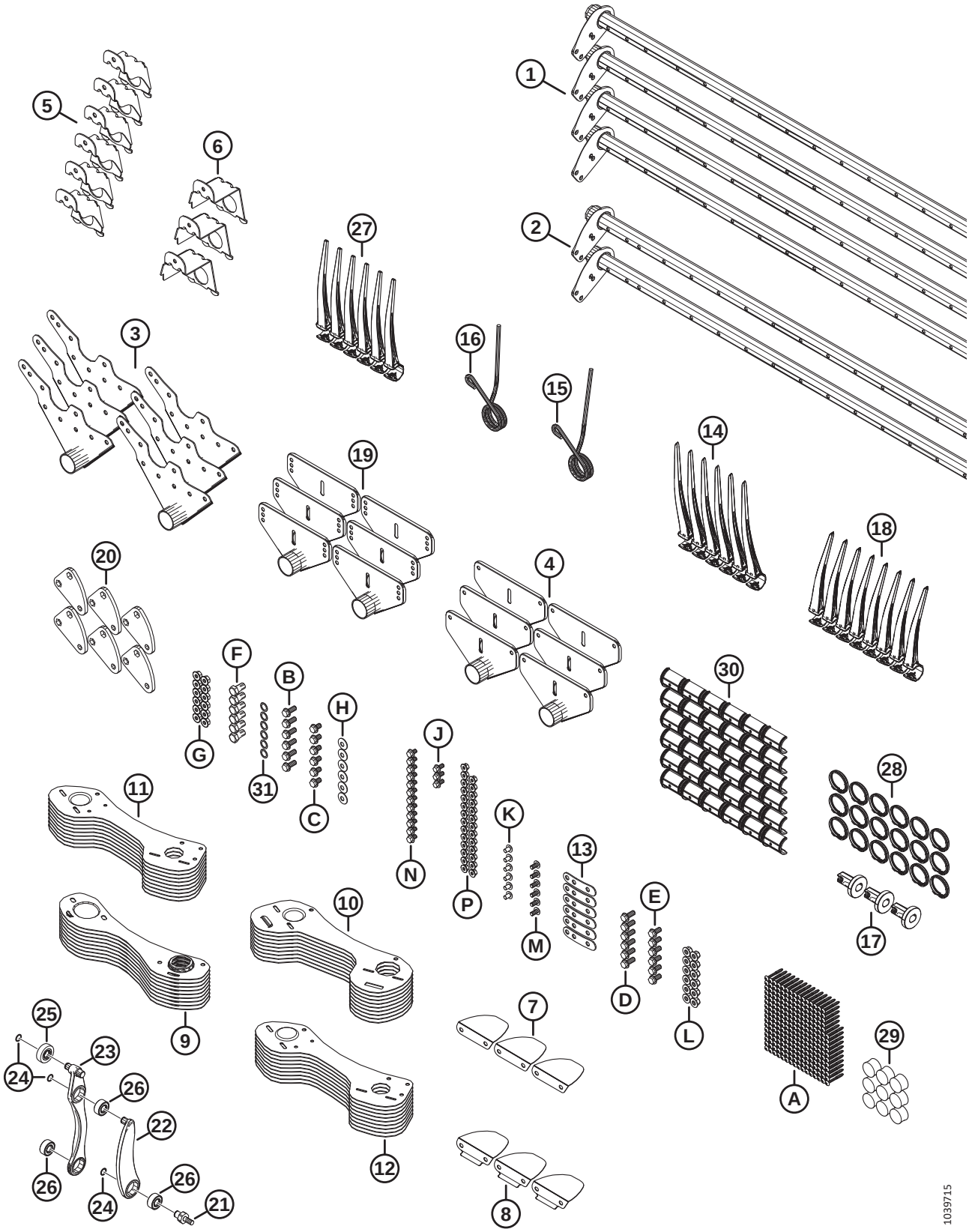

(OPTION) REEL TINE TUBE CONVERSION KITS – DOUBLE REEL, 6 BAT TO 9 BAT

Ref	Part Number	Description	Qty	Serial Number
H	184597	WASHER – CON SPRING M12-ZINC		
J	152655	BOLT – HEX FLG HD M10 X 1.5 X 20-8.8-AA1J		
K	136640	SCREW – TORX TRUSS HD M10 X 1.5 X 16 X SPCL-8.8-AA1J		
L	136431	NUT – HEX FLG CTR LOC M12 X 1.75-10		
M	136395	SCREW – TORX TRUSS HD M10 X 1.5 X 20 X SPCL-8.8-A3L		
N	136151	BOLT – HEX FLG HD TFL M10 X 1.5 X 16-8.8-AA1J		
P	135799	NUT – HEX FLG CTR LOC M10 X 1.5-10		

136 (Option) Reel – Two Speed

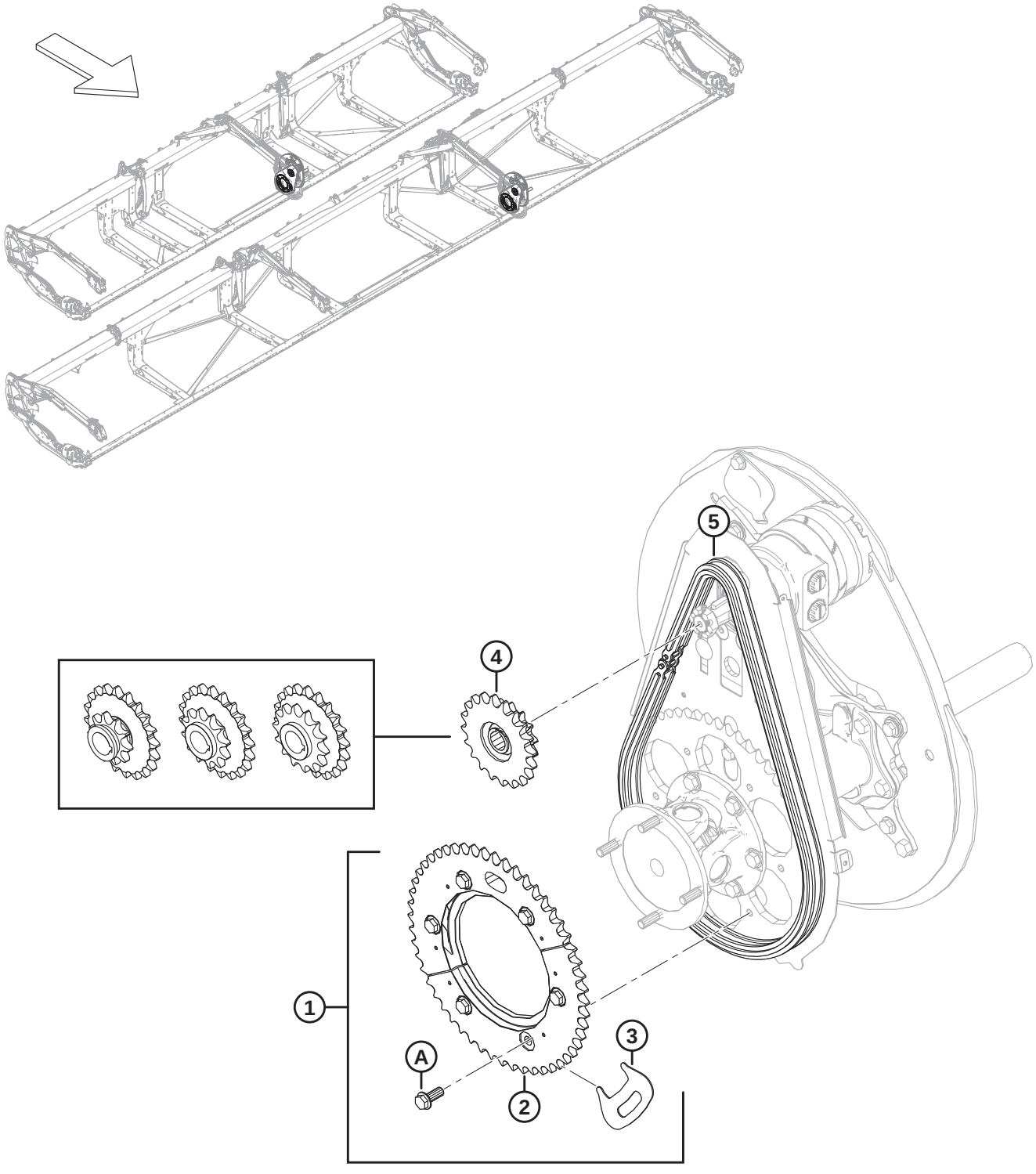

1032643

Ref	Part Number	Description	Qty	Serial Number
1	311882	KIT – 2 SPEED [554]	1	
2	273689	SPROCKET – MACHINED 52 T	1	
3	273594	TOOL – SPROCKET	1	
4	273451	SPROCKET – DUAL 10-20 (CASE IH, CLAAS 700, 5000, 6000, 7000, AND 8000 SERIES, AND JOHN DEERE 50, 60, 70 STS) [555]	1	
	273452	SPROCKET – DUAL 12-20 (CLAAS 500 SERIES, GLEANER, IDEAL, MASSEY FERGUSON, AND JOHN DEERE S670/S770 AND SMALLER) [556]	1	
	273453	SPROCKET – DUAL 14-20 (NEW HOLLAND AND JOHN DEERE S680/ S780 AND LARGER) [557]	1	
5	273907	CHAIN – RC 60 ENDLESS 76 LINKS [558]	OPT	
	273963	CHAIN – RC C/W CONNECTOR 76 LINKS [558]	OPT	
A	320192	BOLT – HEX FLG HD M12 X 1.75 X 30-SPCL-8.8-AA1J		

554. The kit includes 52-tooth machined sprocket (MD #273689), sprocket tool (MD #273594), six bolts (MD #320180), and instructions.
555. Used for Case IH, CLAAS 700, 5000, 6000, 7000 and 8700 Series, and John Deere 50, 60 and 70 STS combines. 2000 psi reel drive circuit pressure.
556. Used for CLAAS 500 Series, Gleaner®, IDEAL™, Massey Ferguson®, and John Deere S670/S770 and smaller combines. 2500 psi reel drive circuit pressure.
557. Used for New Holland and John Deere S680/S780 and larger combines. 3000 psi reel drive circuit pressure.
558. The chain is **NOT** included in kit (MD #311882). A new chain is recommended if the kit is being installed on a unit with hours and it is not a new header. A worn chain will affect the register of the sprocket halves to one another.

137 (Option) Rice Divider Rods

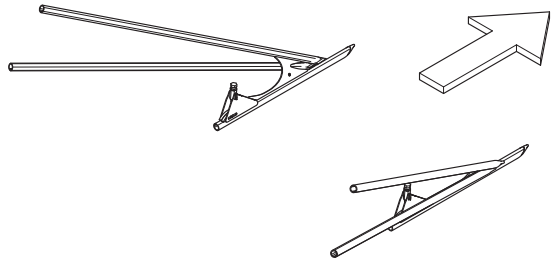

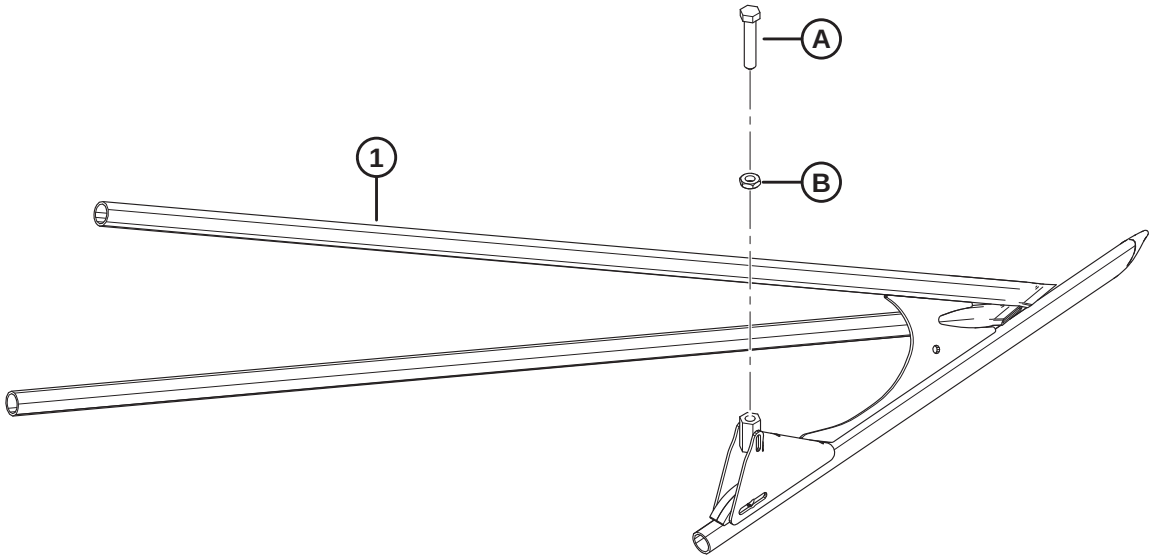

1034744

(OPTION) RICE DIVIDER RODS

Ref	Part Number	Description	Qty	Serial Number
	B7238	RICE DIVIDER RODS [559]		
1	340095	DIVIDER – RICE LH TUBE WELDT	1	
	340096	DIVIDER – RICE RH TUBE WELDT	1	
A	232762	SET SCREW – MACHINED		
B	184696	NUT – HEX THIN M12 X 1.75-05-AA1J		

559. Kits are available through Whole Goods only.

138 (Option) Rock Retarder Kit

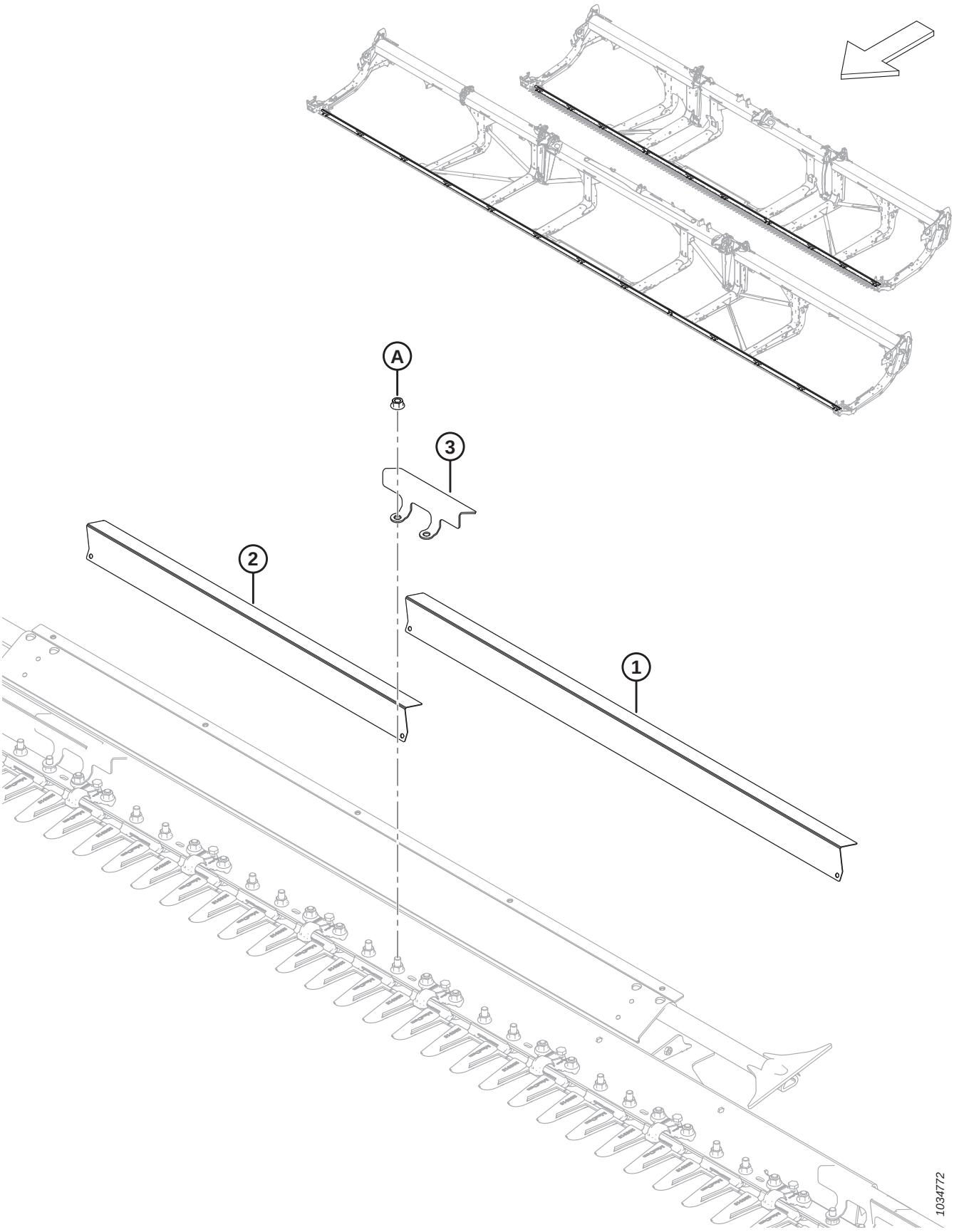

(OPTION) ROCK RETARDER KIT

Ref	Part Number	Description	Qty	Serial Number
	B7122	KIT – ROCK RETARDER, FD225, FD230, FD235, AND FD241 [560]		
	B7123	KIT – ROCK RETARDER KIT, FD240, FD245, AND FD250 [560]		
1	233800	DEFLECTOR – ROCK GUARD LONG [561]		
2	233799	DEFLECTOR – ROCK GUARD SHORT [562]		
3	233635	CLAMP – ROCK GUARD [563]		
A	136036	NUT – HEX SM FLG M12 X 1.75-8-AA1J		

560. Kits are available through Whole Goods only.
561. Quantities per kit: B7122 = 4, B7123 = 10.
562. Quantities per kit: B7122 = 9, B7123 = 4.
563. Quantities per kit: B7122 = 14, B7123 = 15.

139 (Option) Service Kit – Pointed Guards, Coarse Knives

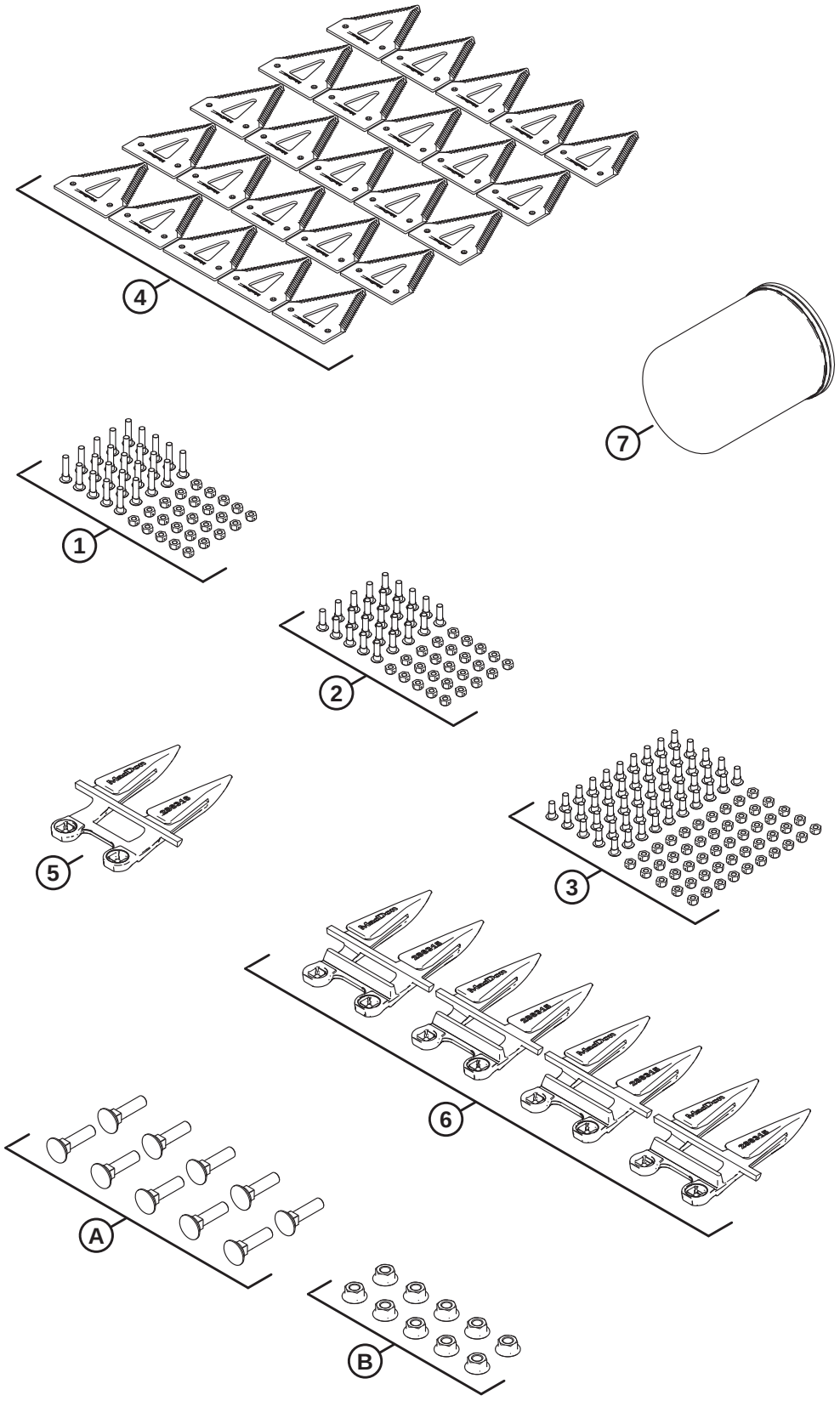

1034897

(OPTION) SERVICE KIT – POINTED GUARDS, COARSE KNIVES

Ref	Part Number	Description	Qty	Serial Number
	B7155	KIT – SERVICE, POINTED, COARSE [564]		
	311789	KIT – FD2 SERVICE PTD CRS [565]		
1	286477	KIT – SCREW M6 X 29 C/W NUT 25PK	1	
2	286476	KIT – SCREW M6 X 22 C/W NUT 25PK	1	
3	286475	KIT – SCREW M6 X 18 C/W NUT 50PK	1	
4	286461	SECTION – CLEARCUT COARSE 25PK	1	
5	286316	KNIFE GUARD – POINTED END	1	
6	286315	KNIFE GUARD – POINTED	4	
7	320360	FILTER – HYD C/W 2X SEALS	1	
A	226295	BOLT – RHSN SPCL M12 X 47-8.8		
B	136036	NUT – HEX SM FLG M12 X 1.75-8-AA1J		

564. Kits are available through Whole Goods only. This is not available for sale in North America.
565. The kit includes all listed parts.

140 (Option) Service Kit – PlugFree™ Guards, Coarse Knives

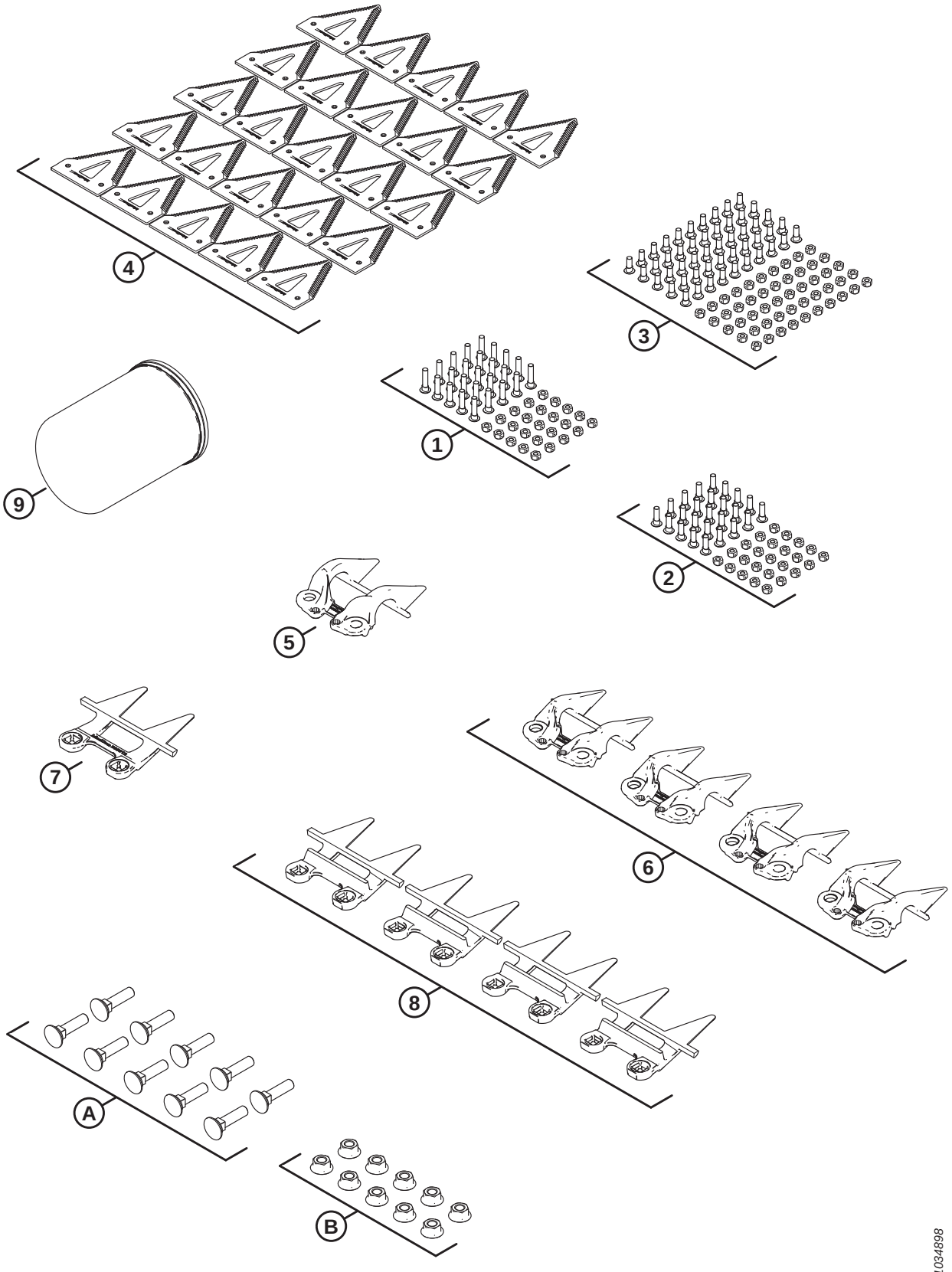

(OPTION) SERVICE KIT – PLUGFREE™ GUARDS, COARSE KNIVES

Ref	Part Number	Description	Qty	Serial Number
	B7156	KIT – SERVICE, PLUGFREE, COARSE [566]		
	311790	KIT – FD2 SERVICE PF CRS [567]		
1	286477	KIT – SCREW M6 X 29 C/W NUT 25PK	1	
2	286476	KIT – SCREW M6 X 22 C/W NUT 25PK	1	
3	286475	KIT – SCREW M6 X 18 C/W NUT 50PK	1	
4	286461	SECTION – CLEARCUT COARSE 25PK	1	
5	286331	HOLD-DOWN – PLUGFREE END	1	
6	286330	HOLD-DOWN – PLUGFREE	4	
7	286319	KNIFE GUARD – PLUGFREE END	1	
8	286318	KNIFE GUARD – PLUGFREE	4	
9	320360	FILTER – HYD C/W 2X SEALS	1	
A	226295	BOLT – RHSN SPCL M12 X 47-8.8		
B	136036	NUT – HEX SM FLG M12 X 1.75-8-AA1J		

566. Kits are available through Whole Goods only.
567. The kit includes all listed parts.

141 (Option) Service Kit Plus – Single Knife

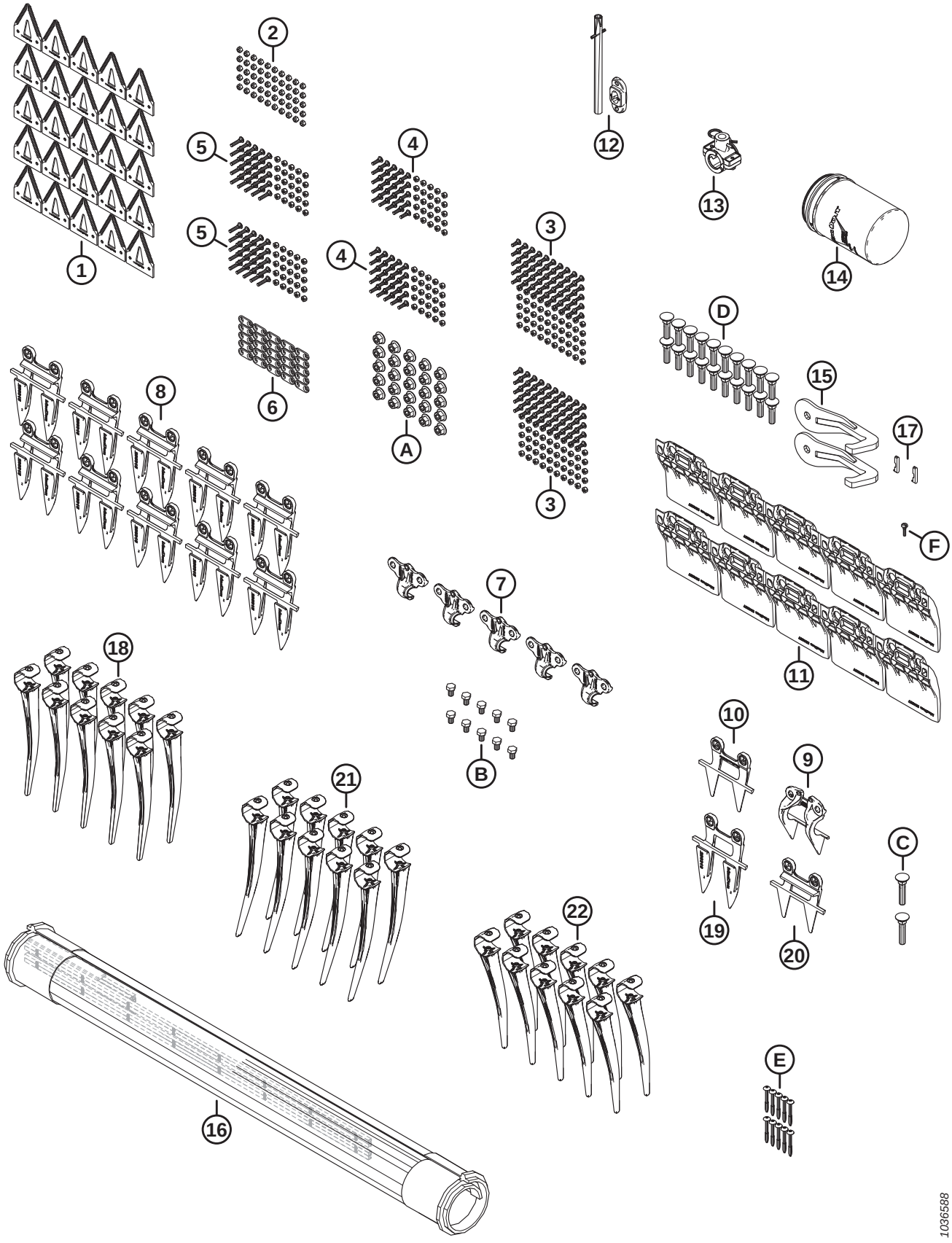

(OPTION) SERVICE KIT PLUS – SINGLE KNIFE

Ref	Part Number	Description	Qty	Serial Number
	B7365	KIT – SERVICE PLUS, SK FD2 [568]		
	340492	KIT – SERVICE PLUS, SK FD2 [569]		
1	286461	SECTION – CLEARCUT COARSE 25PK	1	
2	286479	KIT – NUT CTR LOC CSK M6 X 1 50PK	1	
3	286475	KIT – SCREW M6 X 18 C/W NUT 50PK	2	
4	286476	KIT – SCREW M6 X 22 C/W NUT 25PK	2	
5	286477	KIT – SCREW M6 X 29 C/W NUT 25PK	2	
6	286481	BAR – REINFORCEMENT 25PK	1	
7	286329	HOLD-DOWN – POINTED	5	
8	286315	KNIFE GUARD – POINTED	10	
9	286331	HOLD-DOWN – PLUGFREE END	1	
10	286319	KNIFE GUARD – PLUGFREE END	1	
11	286257	SHOE – WEARPLATE CUTTERBAR	10	
12	337152	KIT – FINGER [570]	1	
13	276839	KIT – FINGER HOLDER SPLIT, 5X [571]	1	
14	320360	FILTER – HYD C/W 2X SEALS	1	
15	258876	WELDT – BREAKAWAY HOOK	2	
16	319105	KIT – DRAPER REPAIR 50 INCH [572]	1	
	NSS	DRAPER – REPAIR-50 IN.-500 MM PIECE		
	319095	KIT – DRAPER CONNECTOR 50 INCH [573]		
17	275864	KEY – DRAPER DRIVE MOTOR	2	
18	174849	FINGER – PLASTIC HEAVY DUTY (PKG OF 10)	1	
19	286316	KNIFE GUARD – POINTED END	1	
20	286318	KNIFE GUARD – PLUGFREE	1	
21	311523	FINGER – PLASTIC, RH ANGLED, 52 MM (PKG OF 10)	1	
22	360540	FINGER – PLASTIC, LH ANGLED, 45 MM (PKG OF 10)	1	
A	136036	NUT – HEX SM FLG M12 X 1.75-8-AA1J		
B	136005	BOLT – HEX HD FINE TFL M10 X 1.25 X 16-8.8-AA1J		
C	226280	BOLT – RHSN SPCL M12 X 60-8.8		
D	226295	BOLT – RHSN SPCL M12 X 47-8.8		
E	252687	SCREW – 48° PLASTITE TWIN HELIX		
F	135630	SCREW – BHRN #12-24 NC X 0.920 IN. LG (QTY 50)		

568. Kits are available through Whole Goods only.
569. The kit includes all listed parts.
570. The kit includes spring pin (MD #7642) and guide (MD #337143).
571. The kit includes 5 split finger holders (NSS), 10 spacers (NSS), 5 hairpins (MD #123180), hardware, and instructions.
572. The kit includes draper repair section (NSS) and two draper connector kits (MD #319095).
573. For service parts, refer to Section *12 Draper, page 25*.

142 (Option) Service Kit Plus – Double Knife

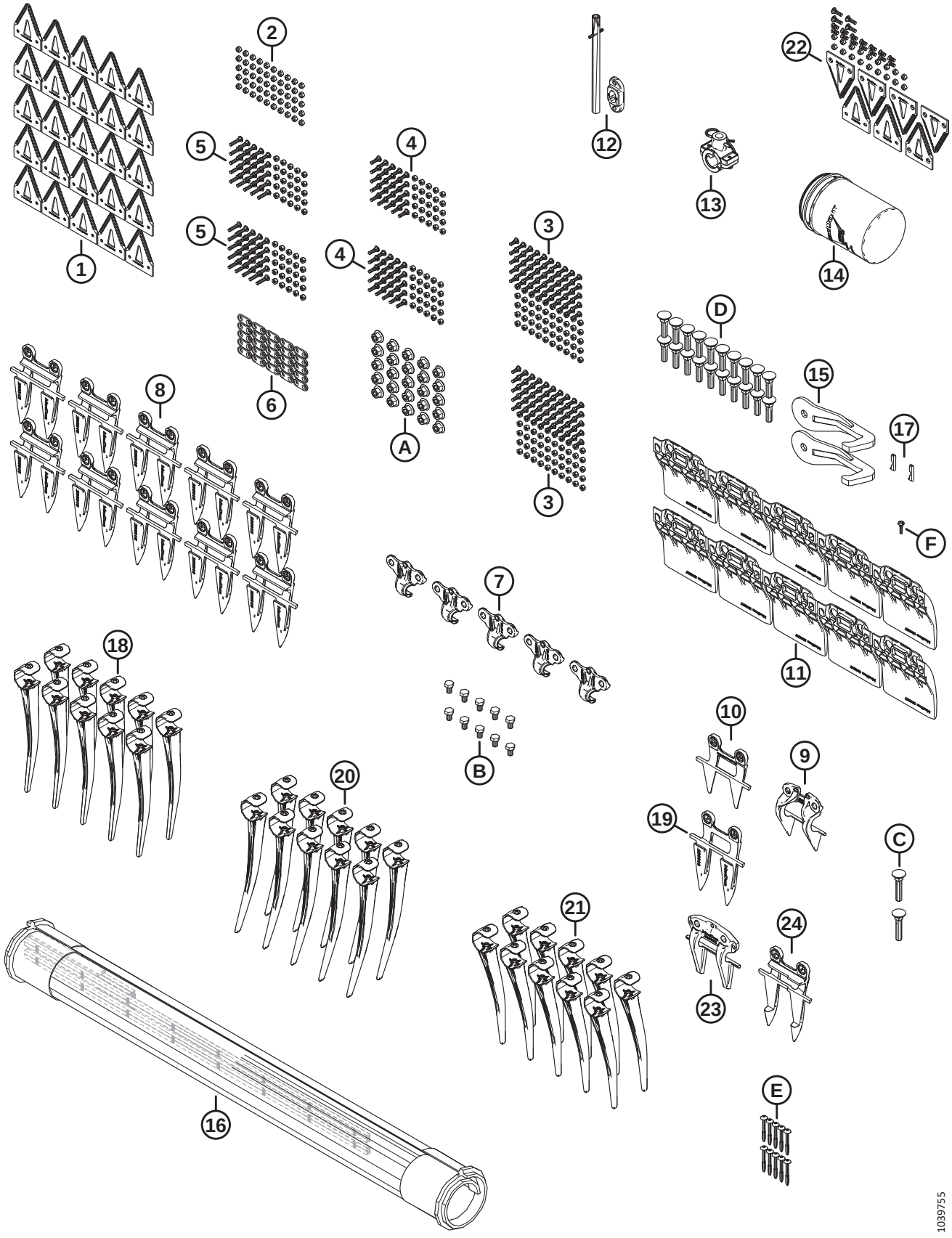

(OPTION) SERVICE KIT PLUS – DOUBLE KNIFE

Ref	Part Number	Description	Qty	Serial Number
	B7366	KIT – SERVICE PLUS, DK FD2 [574]		
	340493	KIT – SERVICE PLUS, DK FD2 [575]		
1	286461	SECTION – CLEARCUT COARSE 25PK	1	
2	286479	KIT – NUT CTR LOC CSK M6 X 1 50PK	1	
3	286475	KIT – SCREW M6 X 18 C/W NUT 50PK	2	
4	286476	KIT – SCREW M6 X 22 C/W NUT 25PK	2	
5	286477	KIT – SCREW M6 X 29 C/W NUT 25PK	2	
6	286481	BAR – REINFORCEMENT 25PK	1	
7	286329	HOLD-DOWN – POINTED	5	
8	286315	KNIFE GUARD – POINTED	10	
9	286331	HOLD-DOWN – PLUGFREE END	1	
10	286319	KNIFE GUARD – PLUGFREE END	1	
11	286257	SHOE – WEARPLATE CUTTERBAR	10	
12	337152	KIT – FINGER [576]	1	
13	276839	KIT – FINGER HOLDER SPLIT, 5X [577]	1	
14	320360	FILTER – HYD C/W 2X SEALS	1	
15	258876	WELDT – BREAKAWAY HOOK	2	
16	319105	KIT – DRAPER REPAIR 50 INCH [578]	1	
	NSS	DRAPER – REPAIR-50 IN.-500 MM PIECE		
	319095	KIT – DRAPER CONNECTOR 50 INCH [579]		
17	275864	KEY – DRAPER DRIVE MOTOR	2	
18	174849	FINGER – PLASTIC HEAVY DUTY (PKG OF 10)	1	
19	286316	KNIFE GUARD – POINTED END	1	
20	311523	FINGER – PLASTIC, RH ANGLED, 52 MM (PKG OF 10)	1	
21	360540	FINGER – PLASTIC, LH ANGLED, 45 MM (PKG OF 10)	1	
22	286861	KIT – CLEARCUT COARSE CENTER [580]	1	
23	286332	HOLD-DOWN – POINTED CENTER	1	
24	286317	KNIFE GUARD – POINTED CENTER	1	
A	136036	NUT – HEX SM FLG M12 X 1.75-8-AA1J		
B	136005	BOLT – HEX HD FINE TFL M10 X 1.25 X 16-8.8-AA1J		
C	226280	BOLT – RHSN SPCL M12 X 60-8.8		
D	226295	BOLT – RHSN SPCL M12 X 47-8.8		
E	252687	SCREW – 48° PLASTITE TWIN HELIX		
F	135630	SCREW – BHRN #12-24 NC X 0.920 IN. LG (QTY 50)		

574. Kits are available through Whole Goods only. This kit is not available for sale in North America.
575. The kit includes all listed parts.
576. The kit includes spring pin (MD #7642) and guide (MD #337143).
577. The kit includes 5 split finger holders (NSS), 10 spacers (NSS), 5 hairpins (MD #123180), hardware, and instructions.
578. The kit includes draper repair section (NSS) and two draper connector kits (MD #319095).
579. For service parts, refer to Section *12 Draper, page 25*.
580. The kit includes five ClearCut™ coarse top sections (NSS), two ClearCut™ coarse bottom sections (NSS), and hardware.

143 (Option) Side Hill Stabilizer Kit

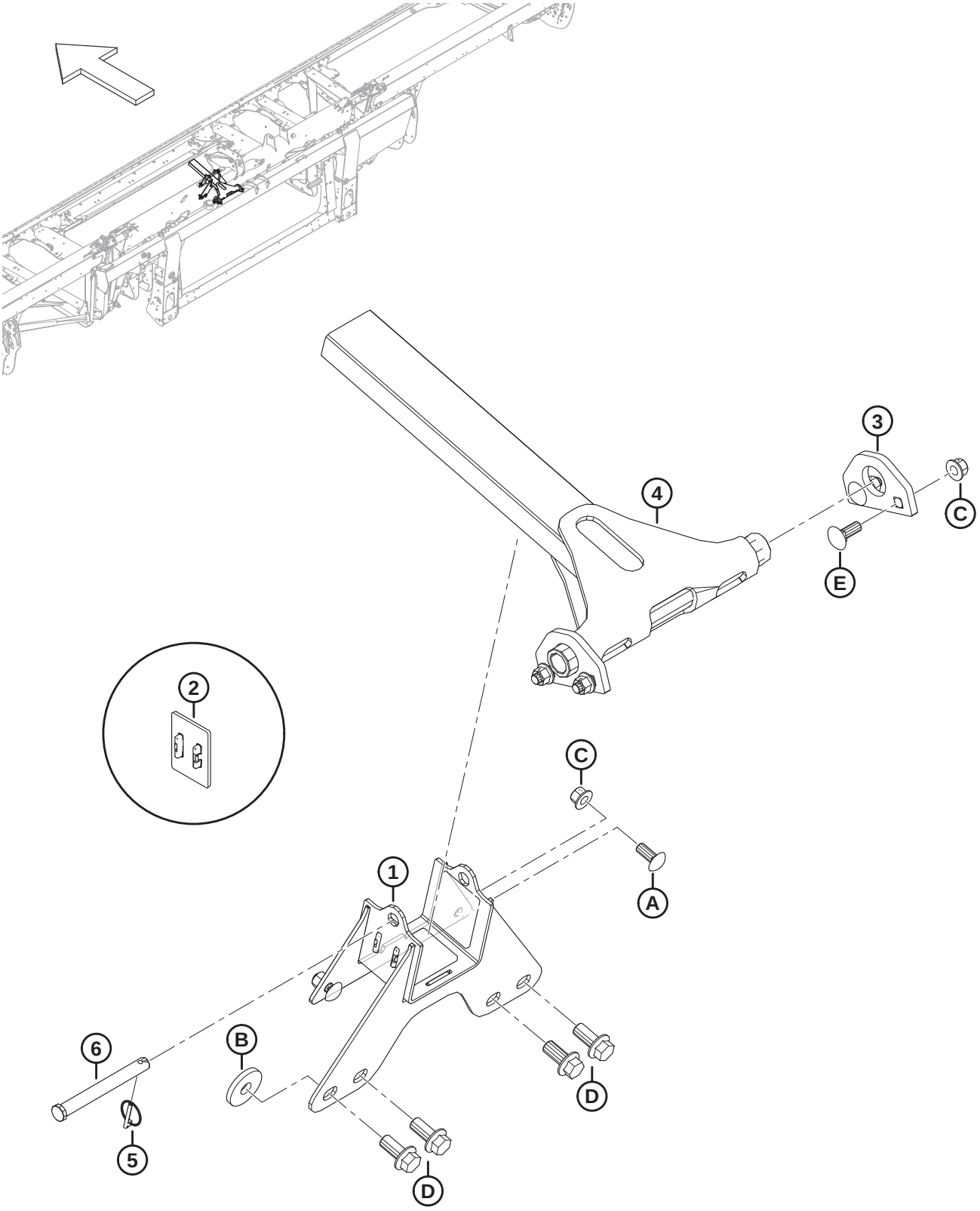

(OPTION) SIDE HILL STABILIZER KIT

Ref	Part Number	Description	Qty	Serial Number
	B7028	KIT – SIDE HILL STABILIZER [581]		
1	258732	ASSY – SIDE HILL STAB. BRACKET [582]	1	
2	273831	PAD – REEL DRIVE WEAR	3	
3	258343	LUG – SIDE HILL STABILIZER	2	
4	258326	WELDT – SIDE HILL STABILIZER	1	
5	50193	PIN – LYNCH	1	
6	49378	PIN – CLEVIS	1	
A	152702	BOLT – RHSSN M12 X 1.75 X 30-8.8-AA1J		
B	152009	WASHER – HARDENED 5/8		
C	136431	NUT – HEX FLG CTR LOC M12 X 1.75-10		
D	136378	BOLT – HEX FLG HD TFL M16 X 2 X 35-10.9		
E	136291	BOLT – RHSN TFL M12 X 1.75 X 35-8.8-ZINC		

581. Kits are available through Whole Goods only.
582. The bracket assembly includes three wear pads (MD #273831).

144 (Option) Stabilizer Wheels

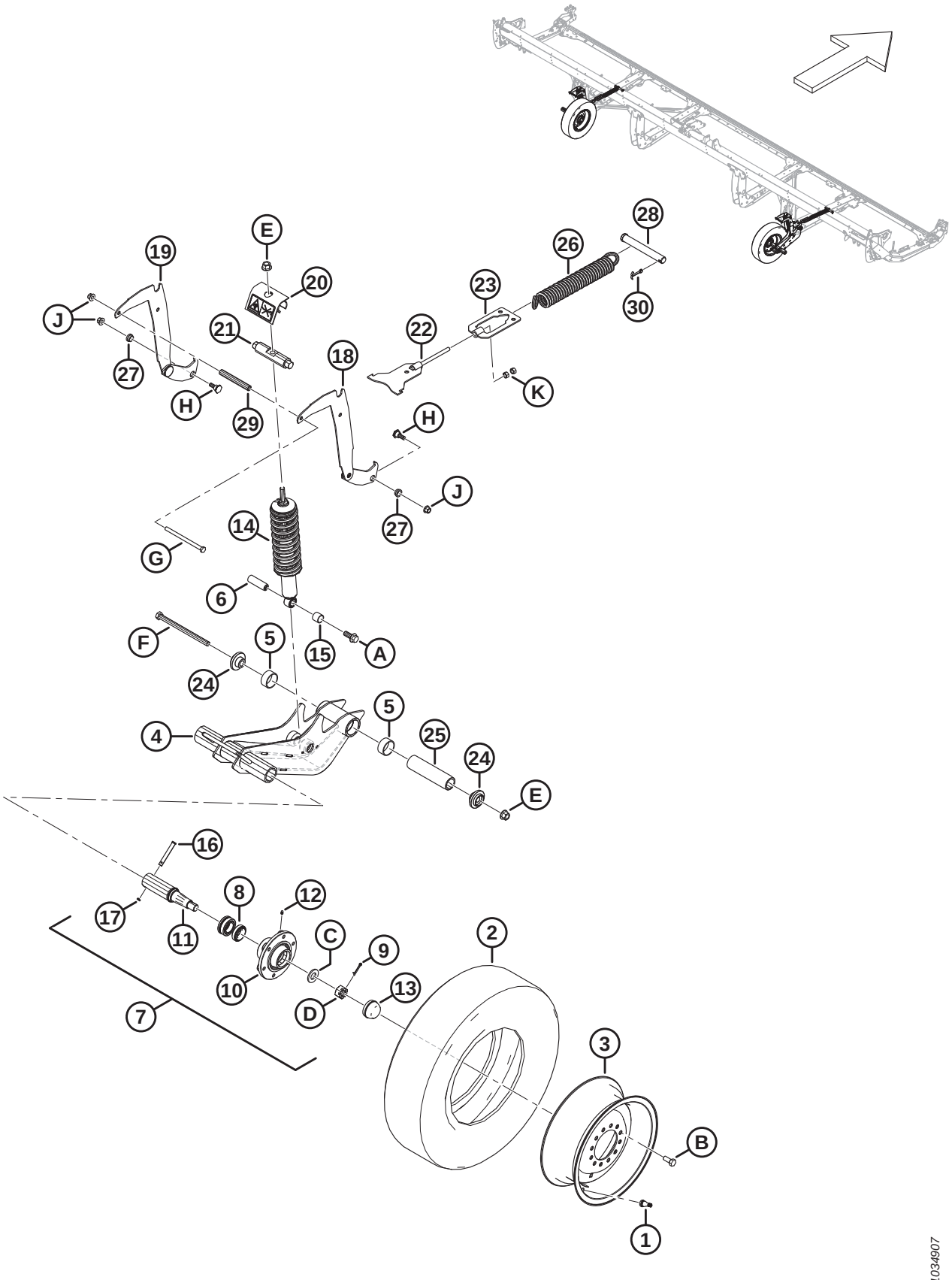

(OPTION) STABILIZER WHEELS

Ref	Part Number	Description	Qty	Serial Number
	C2171	STABILIZER WHEELS – KIT [583]		
	B7398	KIT – TIRES, 225/75R15 LRF [583]		
1	230968	STEM – TIRE VALVE ASSY #TR-416	2	
2	327808	TIRE – ST 225/75 R15 LRF	2	
3	327807	WHEEL – 15 X 6 WHITE [584]	2	
	144531	WHEEL – 15 X 6 LB [585]	A/R	
	327802	DECAL – TIRE PRESSURE, 655 KPA (95 PSI) [586]	2	
	327717	DECAL – TIRE PRESSURE, 552 KPA (80 PSI) [587]	A/R	
	B6460	KIT – STABILIZER WHEELS [583]		
4	327682	ASSY – PIVOT ARM [588]	2	
5	327600	BUSHING – COMPOSITE	4	
6	316793	PIN	2	
7	316330	ASSY – HUB [589]	2	
8	316851	KIT – WHEEL BEARING	2	
9	18608	PIN – COTTER 3/16 DIA X 1.5 ZP	2	
10	316847	HUB	2	
11	316848	SPINDLE	2	
12	18671	FITTING – LUBE 1/4-28 UNF	2	
13	30520	CAP – DUST	2	
14	327798	DAMPENER – HEADER [590]	2	
15	133992	BUSHING – COMPOSITE	2	
16	101007	PIN – CLEVIS	2	
17	18648	PIN – COTTER 3/16 DIA X 1.25 ZP	2	
18	327656	WELDT – SUPPORT, HEIGHT ADJUST	2	
19	327655	WELDT – SUPPORT, HEIGHT ADJUST	2	
20	327089	ASSY – ANTI PRY [591]	2	
21	316284	PIN	2	
22	316096	SUPPORT – WELDT	2	
23	316095	SUPPORT – WELDT	2	

583. Kits are available through Whole Goods only.
584. Wheel (MD #327807) is used with tire (MD #327808).
585. Wheel (MD #144531) remains available as a service part for superseded tire (MD #230483). Wheel (MD #144531) is **NOT** included in Wheels and Tires Kit B7398.
586. Tire pressure decal (MD #327802) (655 kPa [95 psi]) is used with tire (MD #327808).
587. Tire pressure decal (MD #327717) (552 kPa [80 psi]) remains available as a service part for superseded tire (MD #230483).
588. The pivot arm assembly includes two composite bushings (MD #327600).
589. The hub assembly includes pin (MD #18608), fitting (MD #18671), six bolts (MD #18916), dust cap (MD #30520), hub (MD #316847), spindle (MD #316848), wheel bearing kit (MD #316851), nut (MD #316859), and washer (MD #316860).
590. The dampener includes composite bushing (MD #133992).
591. The anti-pry assembly includes energy release decal (MD #327086).

(OPTION) STABILIZER WHEELS

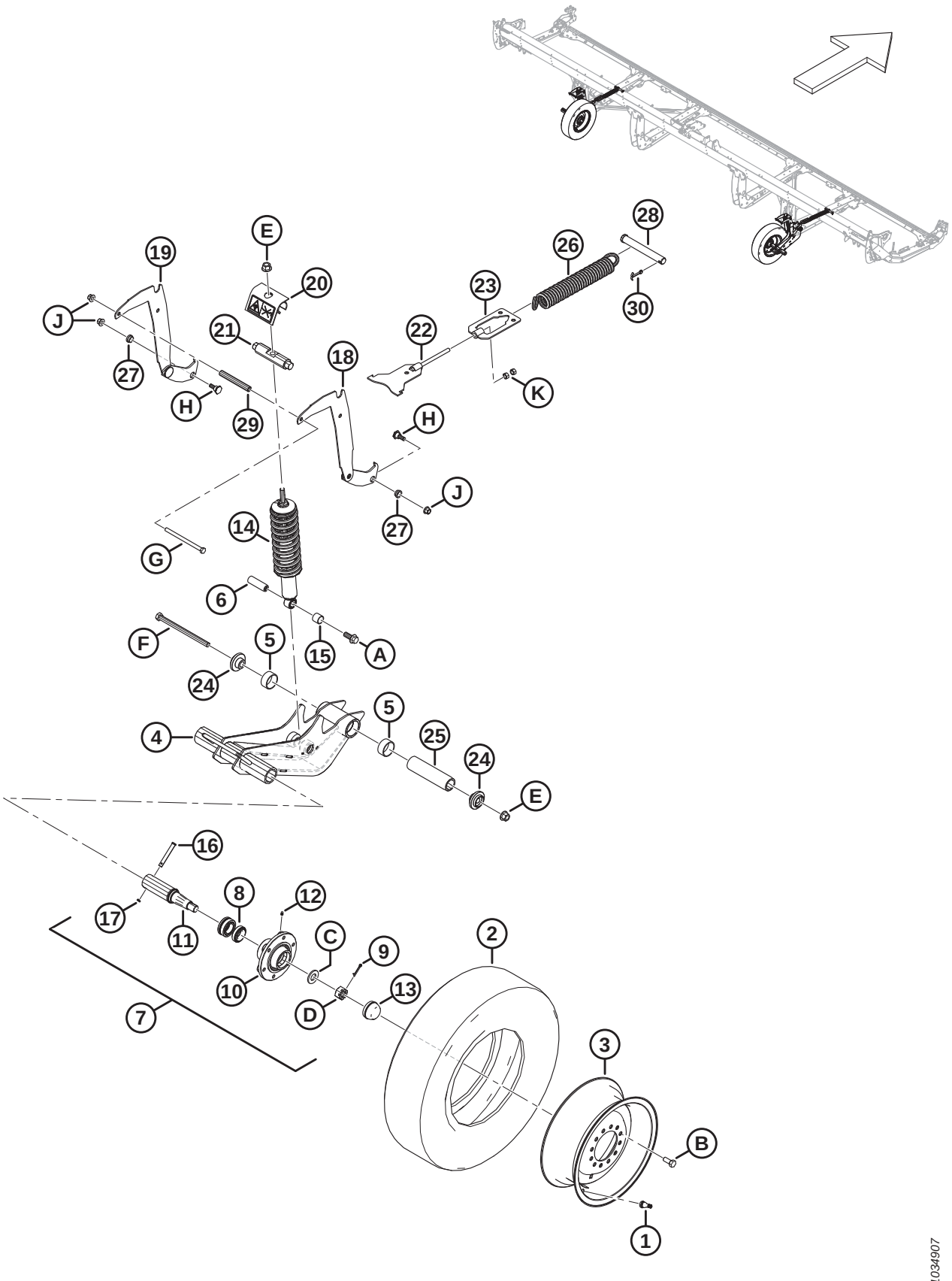

(OPTION) STABILIZER WHEELS

Ref	Part Number	Description	Qty	Serial Number
24	303839	CASTING – PLATE	4	
25	303525	PIN – PIVOT	2	
26	303520	SPRING – EXTENSION	2	
27	303492	BUSHING – COMPOSITE	4	
28	292692	PIN – CLEVIS	2	
29	210985	SPACER	2	
30	18609	PIN – COTTER 1/4 DIA X 2 ZP	2	
	327086	DECAL – ENERGY RELEASE	2	
	316662	DECAL – HEIGHT SETTING	2	
A	320060	BOLT – HEX FLG HD TFL M16 X 2 X 40-10.9-ZINC		
B	18916	BOLT – 90° WHEEL 9/16 NF X 1.75 OL-AA1J		
C	316860	WASHER		
D	316859	NUT – SLOTTED		
E	136440	NUT – HEX FLG CTR LK M16 X 2-10-AA1J		
F	320011	BOLT – HEX HD M16 X 2 X 240-10.9-ZINC		
G	252272	BOLT – HEX HD TFL M12 X 1.75 X 180-10.9-ZINC		
H	303251	BOLT – 19 MM SHLDR M12 SPCL		
J	136431	NUT – HEX FLG CTR LOC M12 X 1.75-10		
K	135156	NUT – HEX M12 X 1.75-10-AA1J		

145 (Option) Steel Finger Kit

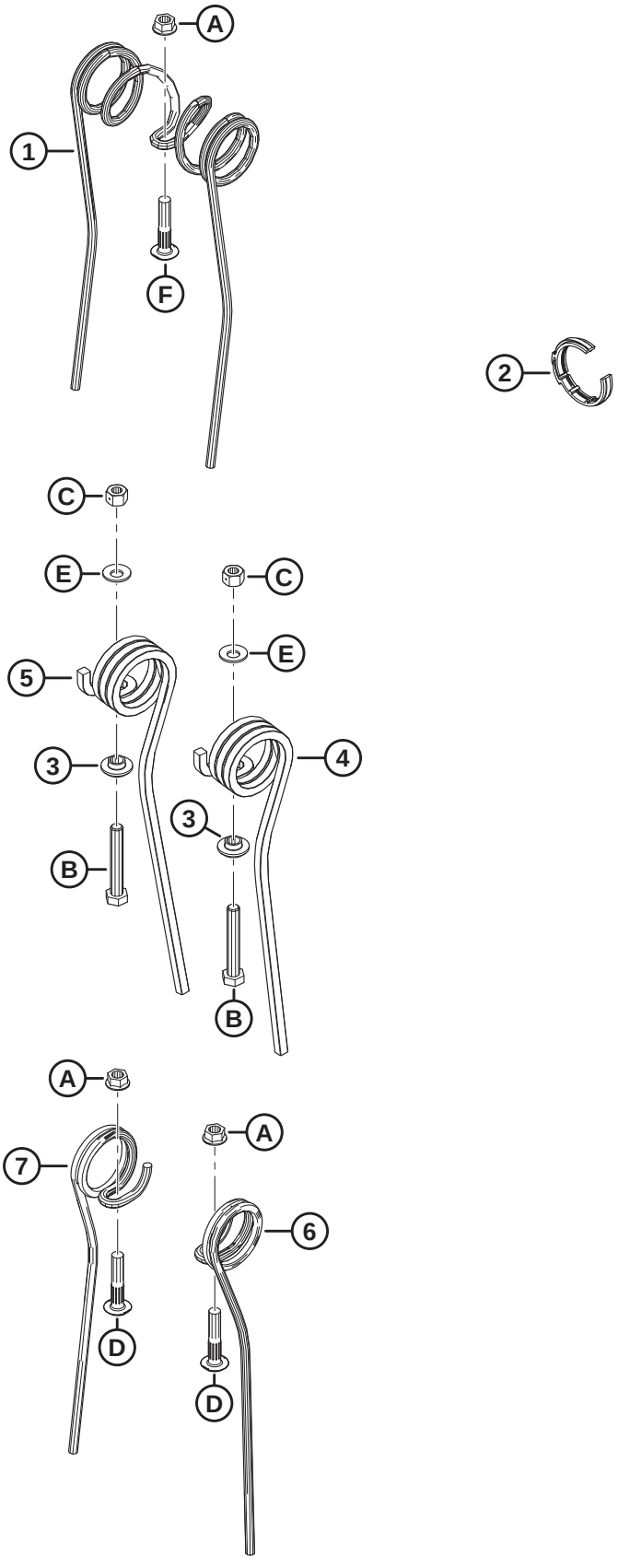

1036678

(OPTION) STEEL FINGER KIT

Ref	Part Number	Description	Qty	Serial Number
	360679	KIT – STEEL FINGER, 25 FT SR, 6 BAT [592]		
	311054	KIT – STEEL FINGER, 30 FT DR, 5 BAT [592]		
	311055	KIT – STEEL FINGER, 30 FT DR, 6 BAT [592]		
	311068	KIT – STEEL FINGER, 35 FT DR, 5 BAT [592]		
	311069	KIT – STEEL FINGER, 35 FT DR, 6 BAT [592]		
1	137092	FINGER [593]		
2	220941	CLAMP – TINE TUBE BUSHING - CENTER RIB (BOX OF 5) [594]		
3	273052	RETAINER – END FINGER [595]		
4	311321	FINGER – TAIL END OUTBOARD [596]		
5	311322	FINGER – TAIL END INBOARD [597]		
6	137754	FINGER – RH SINGLE CONCENTRIC [598]		
7	137519	FINGER – LH SINGLE CONCENTRIC [599]		
A	30228	NUT – FLG DT SM FACE 3/8-16 UNC-GR5-AA1J		
B	108172	BOLT – HEX HD M10 X 1.5 X 65-8.8-AA1J		
C	135800	NUT – HEX CTR LOC SPCL M10 X 1.5-9-AA1J		
D	137118	BOLT –BTN HD RIB NK 3/8 NC		
E	184584	WASHER – CON SPRING M10 STL SAE		

592. The kit includes all listed parts and instructions. Refer to the footnotes on individual service parts for quantities.
593. Quantities: FD225 SR 6 Bat = 135, FD230 DR 5 Bat = 135, FD230 DR 6 Bat = 135, FD235 DR 5 Bat = 143, FD235 DR 6 Bat = 171.
594. Quantities: FD225 SR 6 Bat = 6, FD230 DR 5 Bat = 6, FD230 DR 6 Bat = 8, FD235 DR 5 Bat = 8, FD235 DR 6 Bat = 10.
595. Quantities: FD225 SR 6 Bat = 6, FD230 DR 5 Bat = 10, FD230 DR 6 Bat = 12, FD235 DR 5 Bat = 10, FD235 DR 6 Bat = 12.
596. Quantities: FD225 SR 6 Bat = 6, FD230 DR 5 Bat = 5, FD230 DR 6 Bat = 6, FD235 DR 5 Bat = 5, FD235 DR 6 Bat = 6.
597. Quantities: FD225 SR 6 Bat = 0, FD230 DR 5 Bat = 5, FD230 DR 6 Bat = 6, FD235 DR 5 Bat = 5, FD235 DR 6 Bat = 6.
598. Quantities: FD225 SR 6 Bat = 12, FD230 DR 5 Bat = 4, FD230 DR 6 Bat = 6, FD235 DR 5 Bat = 18, FD235 DR 6 Bat = 24.
599. Quantities: FD225 SR 6 Bat = 9, FD230 DR 5 Bat = 10, FD230 DR 6 Bat = 12, FD235 DR 5 Bat = 30, FD235 DR 6 Bat = 36.

146 (Option) Steel Reel End Finger Kits

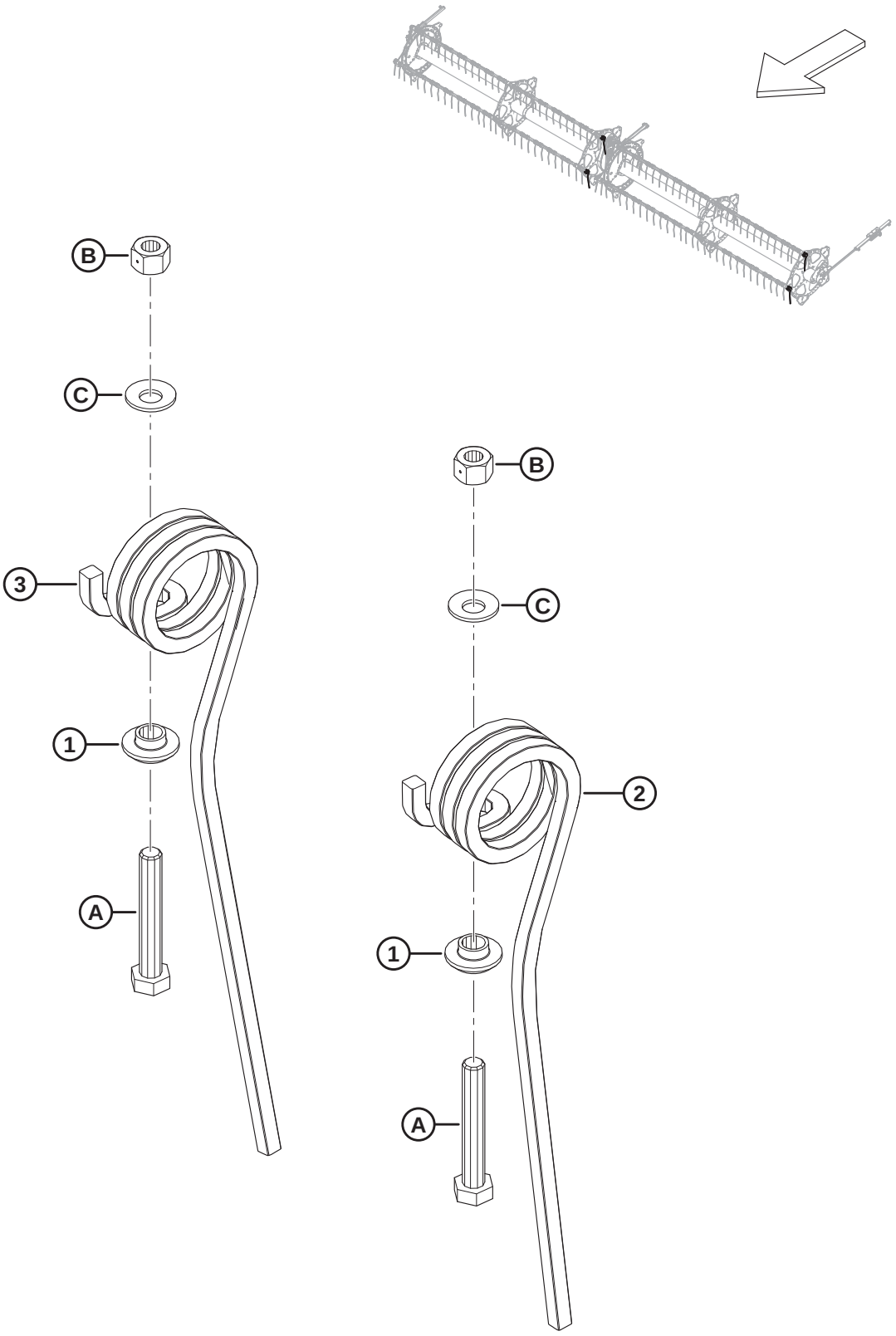

(OPTION) STEEL REEL END FINGER KITS

Ref	Part Number	Description	Qty	Serial Number
	311959	KIT – STEEL END FINGER, OUTBOARD [600]		
	311972	KIT – STEEL END FINGER, INBOARD [601]		
1	273052	RETAINER – END FINGER	1	
2	311321	FINGER – TAIL END OUTBOARD [602]		
3	311322	FINGER – TAIL END INBOARD [603]		
A	108172	BOLT – HEX HD M10 X 1.5 X 65-8.8-AA1J		
B	135800	NUT – HEX CTR LOC SPCL M10 X 1.5-9-AA1J		
C	184584	WASHER – CON SPRING M10 STL SAE		

600. The Outboard Steel End Finger Kit includes one tail end outboard steel finger (MD #311321), all listed hardware, and instructions.
601. The Inboard Steel End Finger Kit includes one tail end inboard steel finger (MD #311322), all listed hardware, and instructions.
602. Quantities: kit MD #311959 = 1, kit MD #311972 = 0.
603. Quantities: kit MD #311959 = 0, kit MD #311972 = 1.

147 (Option) Stubble Lights

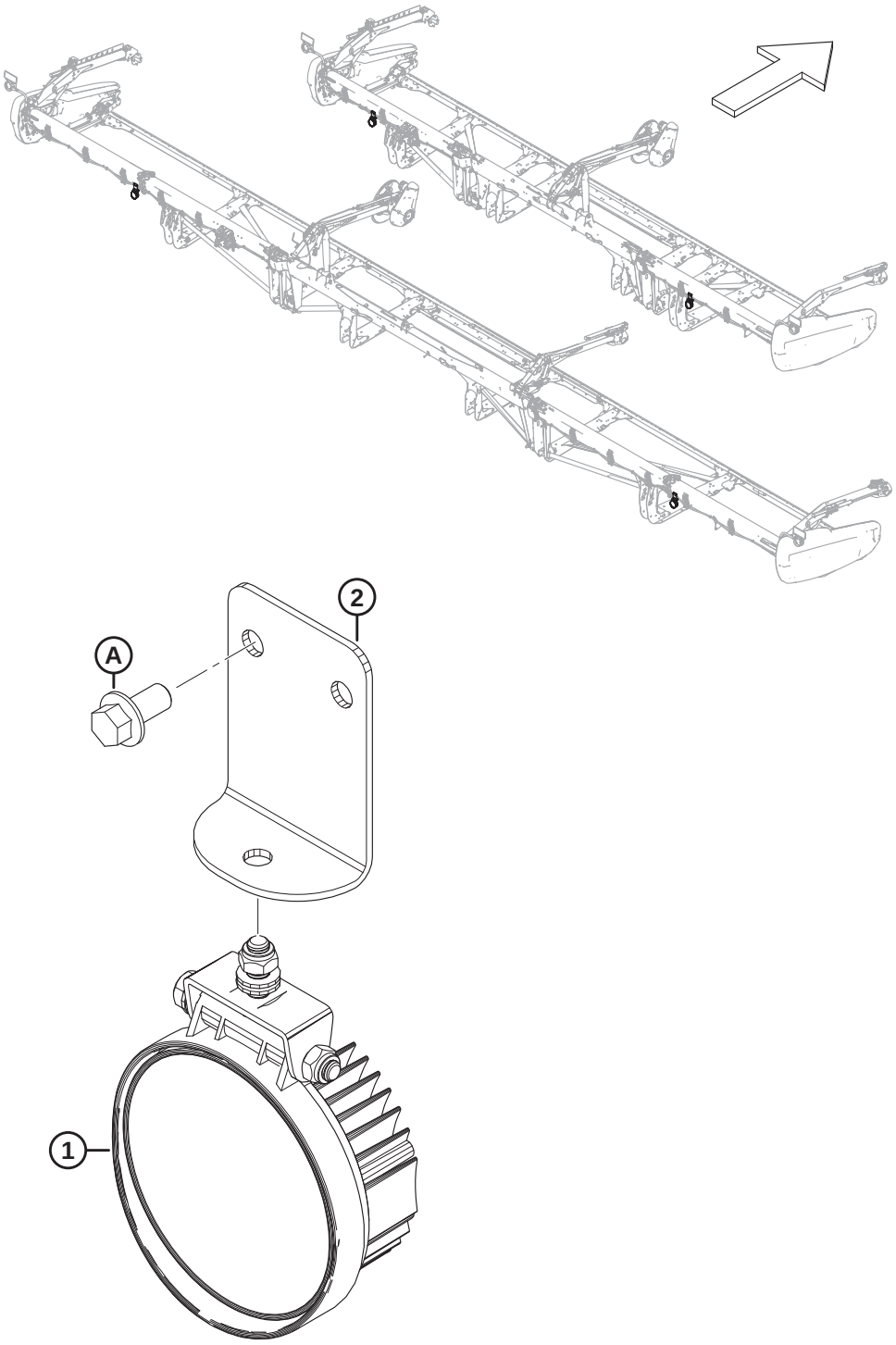

1032898

(OPTION) STUBBLE LIGHTS

NOTE:

The Stubble Lights kit is compatible with all John Deere combines, model year 2019 and later Case combines, and model year 2019 and later New Holland combines only.

Ref	Part Number	Description	Qty	Serial Number
	B7027	KIT – STUBBLE LIGHTS [604]		
1	258458	LIGHT	2	
2	258454	BRACKET – STUBBLE LIGHTS	2	
A	152655	BOLT – HEX FLG HD M10 X 1.5 X 20-8.8-AA1J		

604. Kits are available through Whole Goods only.

148 (Option) Sunflower Attachment – Base Kit – Lean Bar and Deflectors

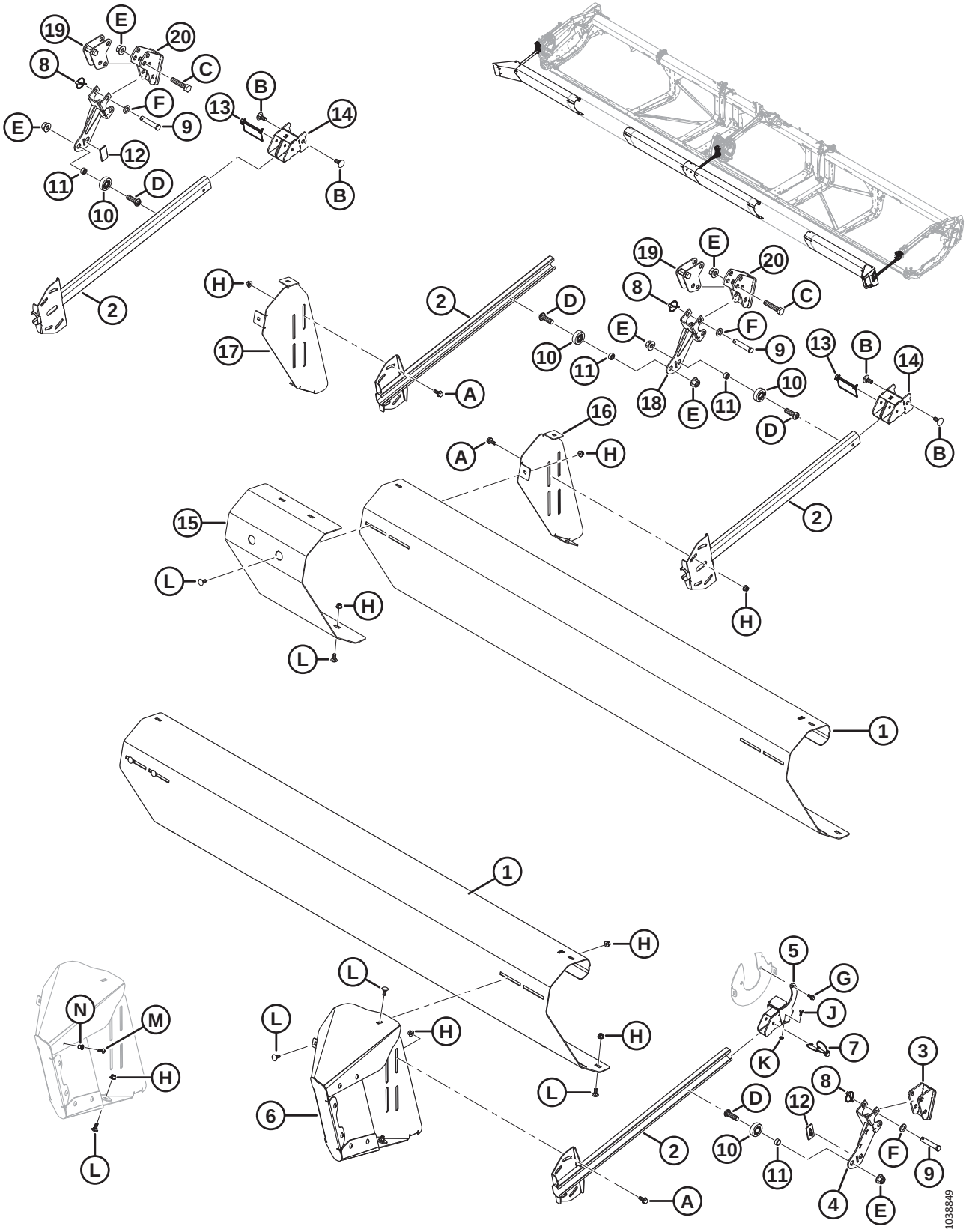

(OPTION) SUNFLOWER ATTACHMENT – BASE KIT – LEAN BAR AND DEFLECTORS

NOTE:

The Sunflower Attachment is compatible with pointed knife guards only.

Ref	Part Number	Description	Qty	Serial Number
	C2086	KIT – 30 FOOT SUNFLOWER ATTACHMENT [605]		
	C2087	KIT – 35 FOOT SUNFLOWER ATTACHMENT [605]		
	C2088	KIT – 40/41 FOOT SUNFLOWER ATTACHMENT (DOUBLE REEL) [605]		
	C2169	KIT – 40 FOOT SUNFLOWER ATTACHMENT (TRIPLE REEL) [605]		
	C2089	KIT – 45 FOOT SUNFLOWER ATTACHMENT [605]		
	C2170	KIT – 50 FOOT SUNFLOWER ATTACHMENT [605]		
	B7302	KIT – SUNFLOWER ATTACHMENT, BASE [606]		
1	119691	DEFLECTOR – LEAN BAR A [607]	4	
2	119757	ARM – PUSH BAR WELDT	4	
3	119593	SUPPORT – LEAN BAR WELDT	1	
4	119667	SUPPORT – LEAN BAR WELDT	1	
5	119666	BRACKET – HANGING WELDT	1	
6	119706	DEFLECTOR-EXTENSION ASSY – LH [608]	1	
	119705	DEFLECTOR-EXTENSION ASSY – RH [608]	1	
7	320205	PIN – LYNCH DIA 5/16 IN. X 1.75 IN. LG W/ TETHER	1	
8	102264	PIN – LYNCH 3/16 X 9/16 IN.	6	
9	18624	PIN – CLEVIS	6	
10	273524	BEARING – CAM FOLLOWER	4	
11	101095	SPACER	4	
12	273777	PAD – REEL DRIVE WEAR	2	
13	136749	PIN – LYNCH	2	
14	119738	BRACKET – WELDT	2	
15	119725	DEFLECTOR – LEAN BAR FILLER	1	
16	119696	BRACKET – LEAN BAR MOUNT, LH	1	
17	119697	BRACKET – LEAN BAR MOUNT, RH	1	
18	119672	SUPPORT – LEAN BAR WELDT	2	
19	119641	ANCHOR – FORE AFT SUBWELDT	2	
20	119623	SUPPORT – FRONT ANCHOR WELDT	2	
A	135783	BOLT – HEX FLG HD TFL M10 X 1.5 X 25-10.9-AA1J		
B	184667	BOLT – RHSN M12 X 1.75 X 30-8.8-ZINC		
C	181475	BOLT – HEX HD M16 X 2 X 75-8.8-BE0R		
D	320441	SCREW – HEX SOC BTN HD M16 X 2.0 X 50-10.9-AA1J		
E	136440	NUT – HEX FLG CTR LK M16 X 2-10-AA1J		

605. Kit contains base kit (B7302), pans kit (B7303), and deflectors kit (B7304, B7305, B7306, B7395, B7307, or B7396). Kits are available through Whole Goods only.
606. Base kit B7302 includes all parts listed in this section and Section *149 (Option) Sunflower Attachment – Base Kit – Pans and Supports, page 365*. Kits are available through Whole Goods only.
607. Four deflectors (MD #119691) are included in the base kit. FD245 and FD250 headers require a total of six.
608. Includes eight Torx screws (MD #320190), eight rivnuts (MD #252179), one bolt (MD #135785), and one nut (MD #135799).

(OPTION) SUNFLOWER ATTACHMENT – BASE KIT – LEAN BAR AND DEFLECTORS

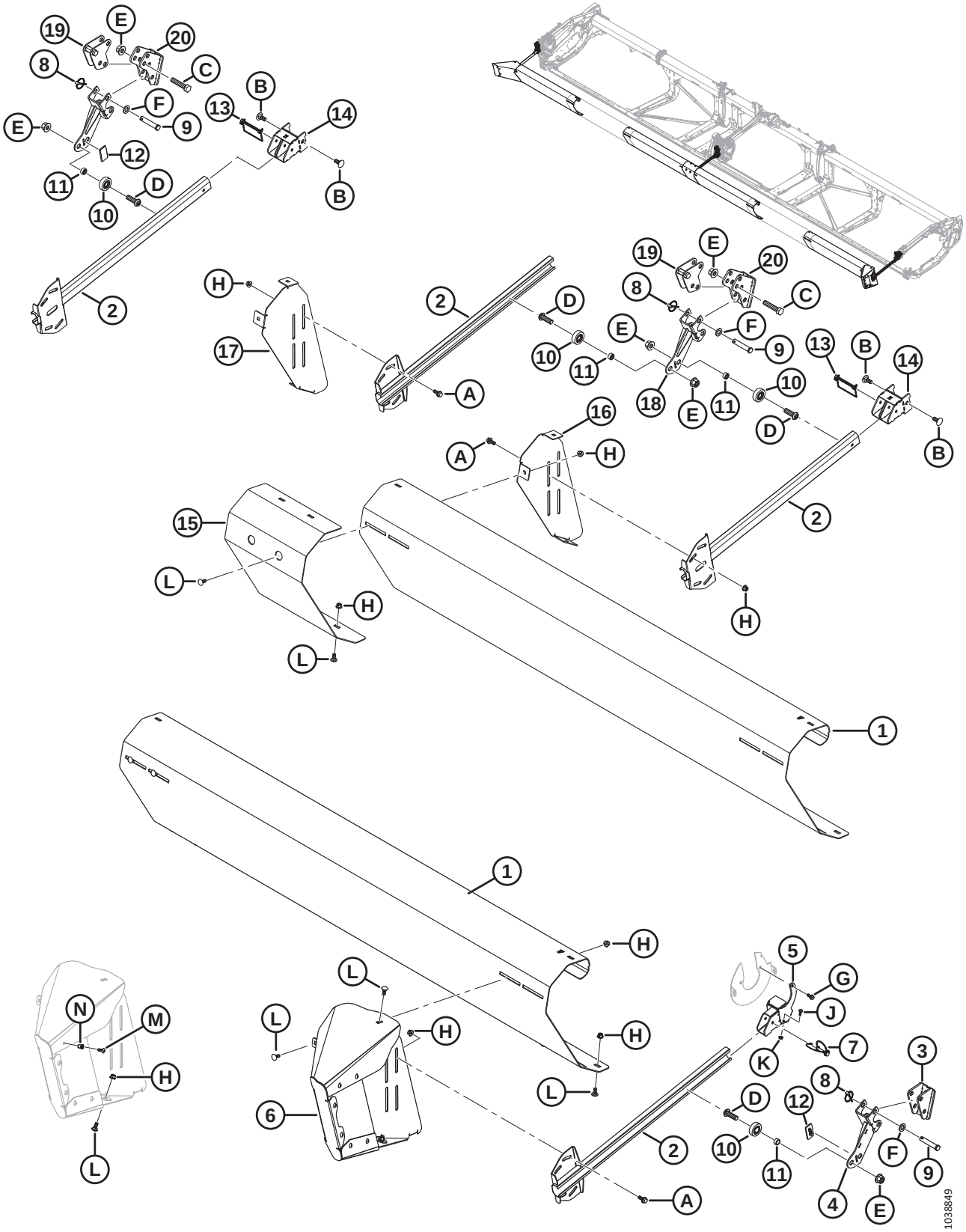

Ref	Part Number	Description	Qty	Serial Number
F	184717	WASHER – FLAT REG M16-200HV-AA1J		
G	136300	BOLT – HEX FLG HD TFL M8 X 1.25 X 20-8.8-AA3L		
H	135799	NUT – HEX FLG CTR LOC M10 X 1.5-10		
J	21572	BOLT – HEX HD 1/4 20 X 0.625 GR5 AA1J		
K	135248	NUT – HEX FLG CTR LOC		
L	135785	BOLT – RHSN M10 X 1.5 X 25-8.8-AA1J		
M	320190	SCREW – TORX TRUSS HD M8 X 1.25 X 20-SPCL-8.8-ZINC		
N	252179	RIVNUT – M8 X 1.25 HEX 0.7-3.8		

149 (Option) Sunflower Attachment – Base Kit – Pans and Supports

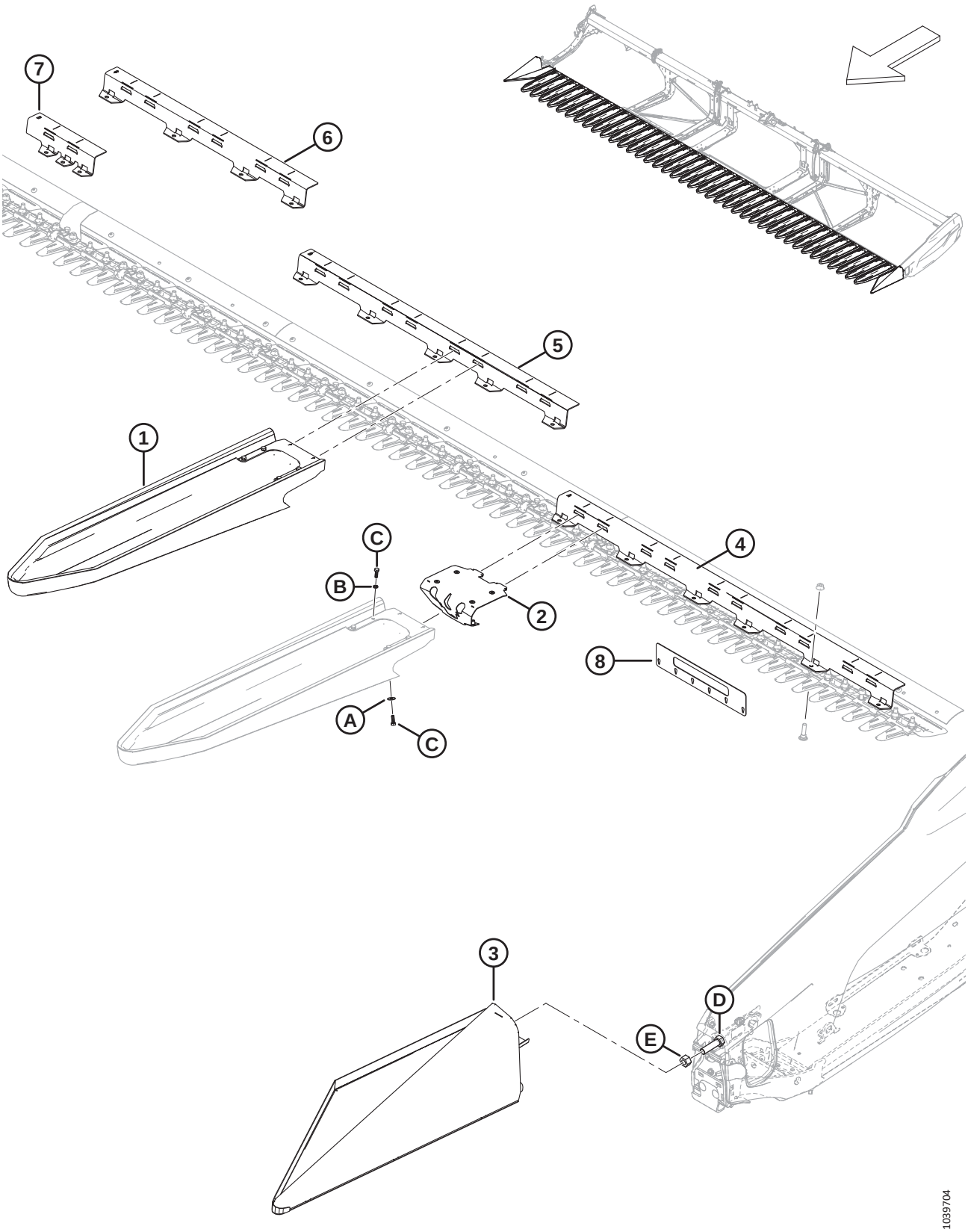

NOTE:

The Sunflower Attachment is compatible with pointed knife guards only.

Ref	Part Number	Description	Qty	Serial Number
	B7302	KIT – SUNFLOWER ATTACHMENT, BASE [609]		
1	119529	PAN – SUNFLOWER QUICK ATTACH [610]	5	
2	119726	ASSEMBLY – PAN LATCH [611]	5	
3	119560	PAN – END LH WELDT	1	
	119565	PAN – END RH WELDT	1	
4	119558	SUPPORT – PAN 5 FT A	2	
5	119653	SUPPORT – PAN 4 FT B	3	
6	119654	SUPPORT – PAN 3 FT C	4	
7	119655	SUPPORT – PAN HINGE D	1	
	119656	SUPPORT – PAN HINGE E	1	
8	119766	TOOL – GUARD TIP CHECK, 2 SERIES	1	
A	184709	WASHER – FLAT LARGE M8-200HV		
B	30716	WASHER – LOCK SPRING M8-CS-1055-1065-AA1J		
C	184652	BOLT – HEX HD TFL M8 X 1.25 X 25-8.8-AA1J		
D	136339	BOLT – HEX HD FINE TFL M20 X 1.5 X 70 X 8.8-ZINC		
E	136342	NUT – HEX FINE M20 X 1.5 X 10-AA3L		

609. Base kit B7302 includes all parts listed in this section and Section *148 (Option) Sunflower Attachment – Base Kit – Lean Bar and Deflectors, page 361*. Kits are available through Whole Goods only.
610. Includes latch assembly (MD #119726), clamp (NSS), six bolts (MD #184652), four lock spring washers (MD #30716), and two flat washers (MD #184709).
611. Includes six rivnuts (MD #252179).

150 (Option) Sunflower Attachment – Deflector Kits (Double Reel)

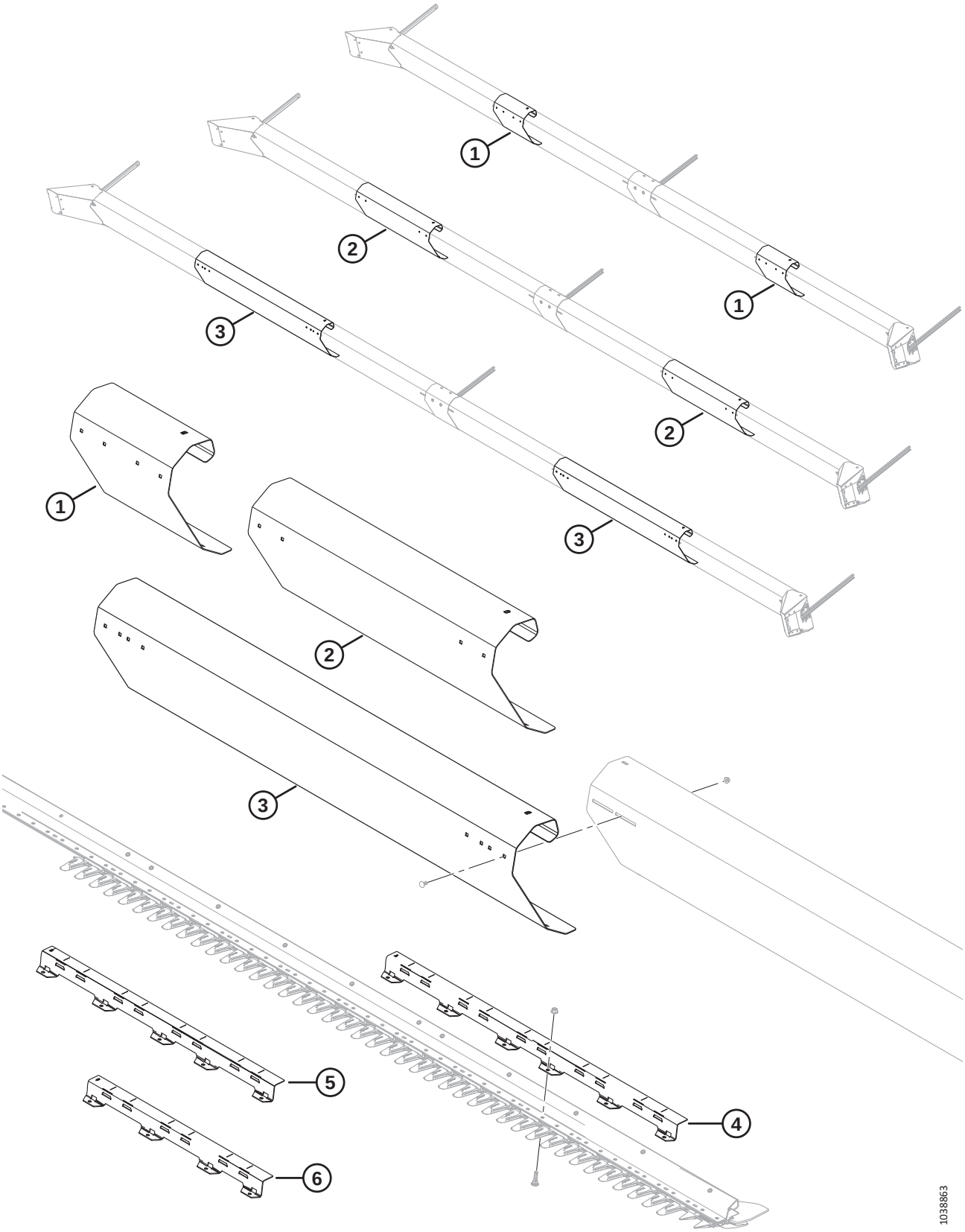

(OPTION) SUNFLOWER ATTACHMENT – DEFLECTOR KITS (DOUBLE REEL)

NOTE:

The Sunflower Attachment is compatible with pointed knife guards only.

Ref	Part Number	Description	Qty	Serial Number
	B7304	KIT – SUNFLOWER DEFLECTOR 30 FT [612]		
	B7305	KIT – SUNFLOWER DEFLECTOR 35 FT [612]		
	B7306	KIT – SUNFLOWER DEFLECTOR 40/41 FT DR [612]		
1	119692	DEFLECTOR – LEAN BAR B [613]	2	
2	119693	DEFLECTOR – LEAN BAR C [614]	2	
3	119694	DEFLECTOR – LEAN BAR D [615]	2	
4	119558	SUPPORT – PAN A (5 FT) [615]	2	
5	119653	SUPPORT – PAN B (4 FT) [615]	1	
6	119654	SUPPORT – PAN C (3 FT) [614]	3	

612. Kits are available through Whole Goods only.
613. Included in B7304 (FD230 headers).
614. Included in B7305 (FD235 headers).
615. Included in B7306 (FD240/FD241 double-reel headers).

151 (Option) Sunflower Attachment – Deflector Kits (Triple Reel)

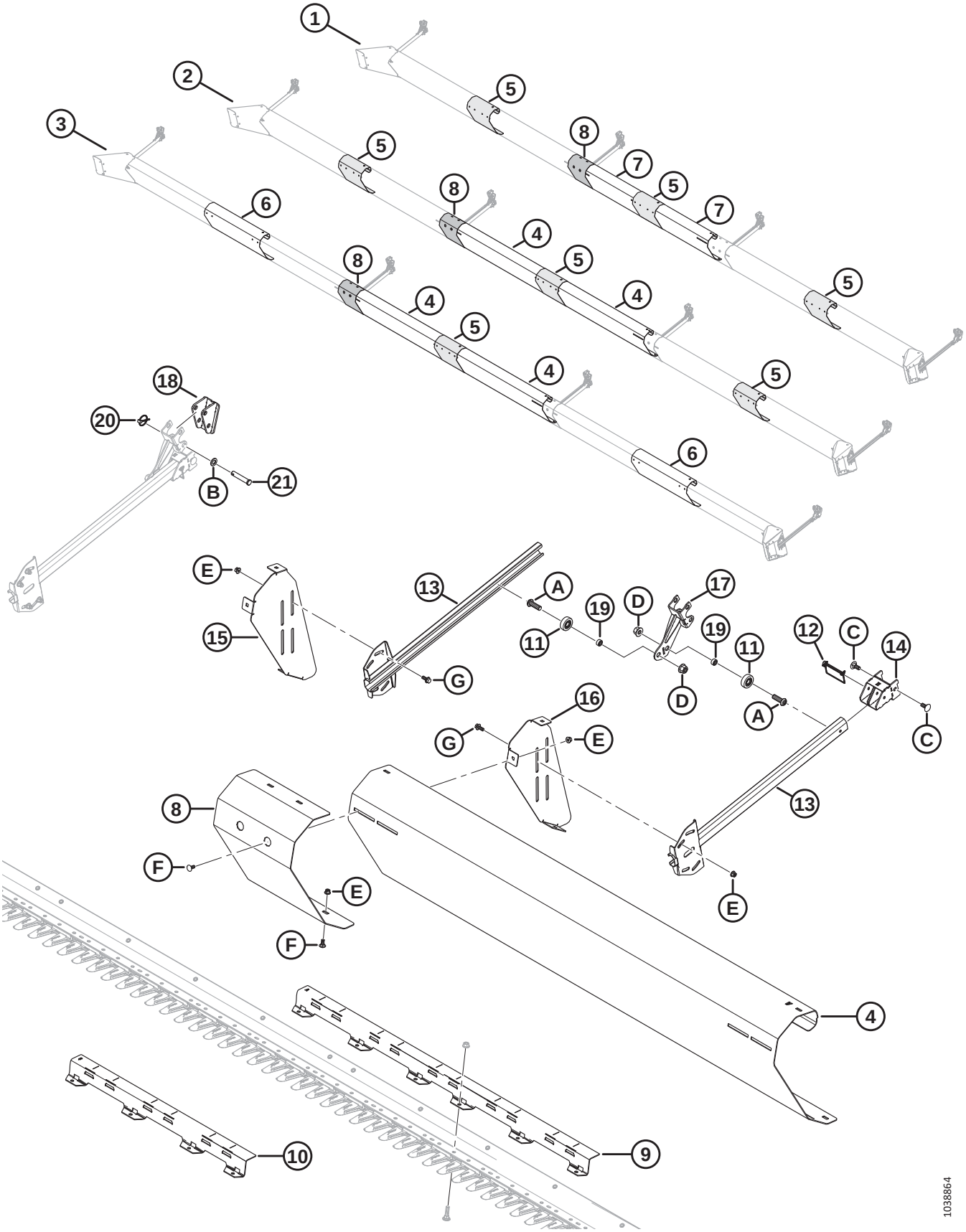

(OPTION) SUNFLOWER ATTACHMENT – DEFLECTOR KITS (TRIPLE REEL)

NOTE:

The Sunflower Attachment is compatible with pointed knife guards only.

Ref	Part Number	Description	Qty	Serial Number
	B7395	KIT – SUNFLOWER DEFLECTOR 40 FT TR [616]		
	B7307	KIT – SUNFLOWER DEFLECTOR 45 FT [616]		
	B7396	KIT – SUNFLOWER DEFLECTOR 50 FT [616]		
1	REF	FD240 TR CONFIGURATION		
2	REF	FD245 TR CONFIGURATION		
3	REF	FD250 TR CONFIGURATION		
4	119691	DEFLECTOR – LEAN BAR A [617]		
5	119692	DEFLECTOR – LEAN BAR B [618]		
6	119693	DEFLECTOR – LEAN BAR C [619]		
7	119745	DEFLECTOR – LEAN BAR E [620]		
8	119725	DEFLECTOR – LEAN BAR FILLER	1	
9	119558	SUPPORT – PAN A (5 FT) [621]		
10	119654	SUPPORT – PAN C (3 FT) [622]	3	
11	273524	BEARING – CAM FOLLOWER	2	
12	136749	PIN – LYNCH	1	
13	119757	ARM – PUSH BAR WELDT	2	
14	119738	BRACKET – WELDT	1	
15	119697	BRACKET – LEAN BAR MOUNT RH	1	
16	119696	BRACKET – LEAN BAR MOUNT LH	1	
17	119672	SUPPORT – LEAN BAR WELDT	1	
18	119593	SUPPORT – LEAN BAR WELDT	1	
19	101095	SPACER	2	
20	102264	PIN – LYNCH 3/16 X 1 9/16 IN.	2	
21	18624	PIN – CLEVIS	2	
A	320441	SCREW – HEX SOC BTN HD M16 X 2.0 X 50-10.9-AA1J		
B	184717	WASHER – FLAT REG M16-200HV-AA1J		
C	184667	BOLT – RHSN M12 X 1.75 X 30-8.8-ZINC		
D	136440	NUT – HEX FLG CTR LK M16 X 2-10-AA1J		
E	135799	NUT – HEX FLG CTR LOC M10 X 1.5-10		
F	135785	BOLT – RHSN M10 X 1.5 X 25-8.8-AA1J		
G	135783	BOLT – HEX FLG HD TFL M10 X 1.5 X 25-10.9-AA1J		

616. Kits are available through Whole Goods only.
617. Quantities: B7307 (FD245 headers) = 2; B7396 (FD250 headers) = 2.
618. Quantities: B7395 (FD240 headers) = 3; B7307 (FD245 headers) = 3; B7396 (FD250 headers) = 1.
619. Quantities: B7396 (FD250 headers) = 2.
620. Quantities: B7395 (FD240 headers) = 2.
621. Quantities: B7395 (FD240 headers) = 2; B7307 (FD245 headers) = 2; B7396 (FD250 headers) = 4.
622. Quantities: B7307 (FD245 headers) = 3.

152 (Option) Sunflower Attachment – Pans

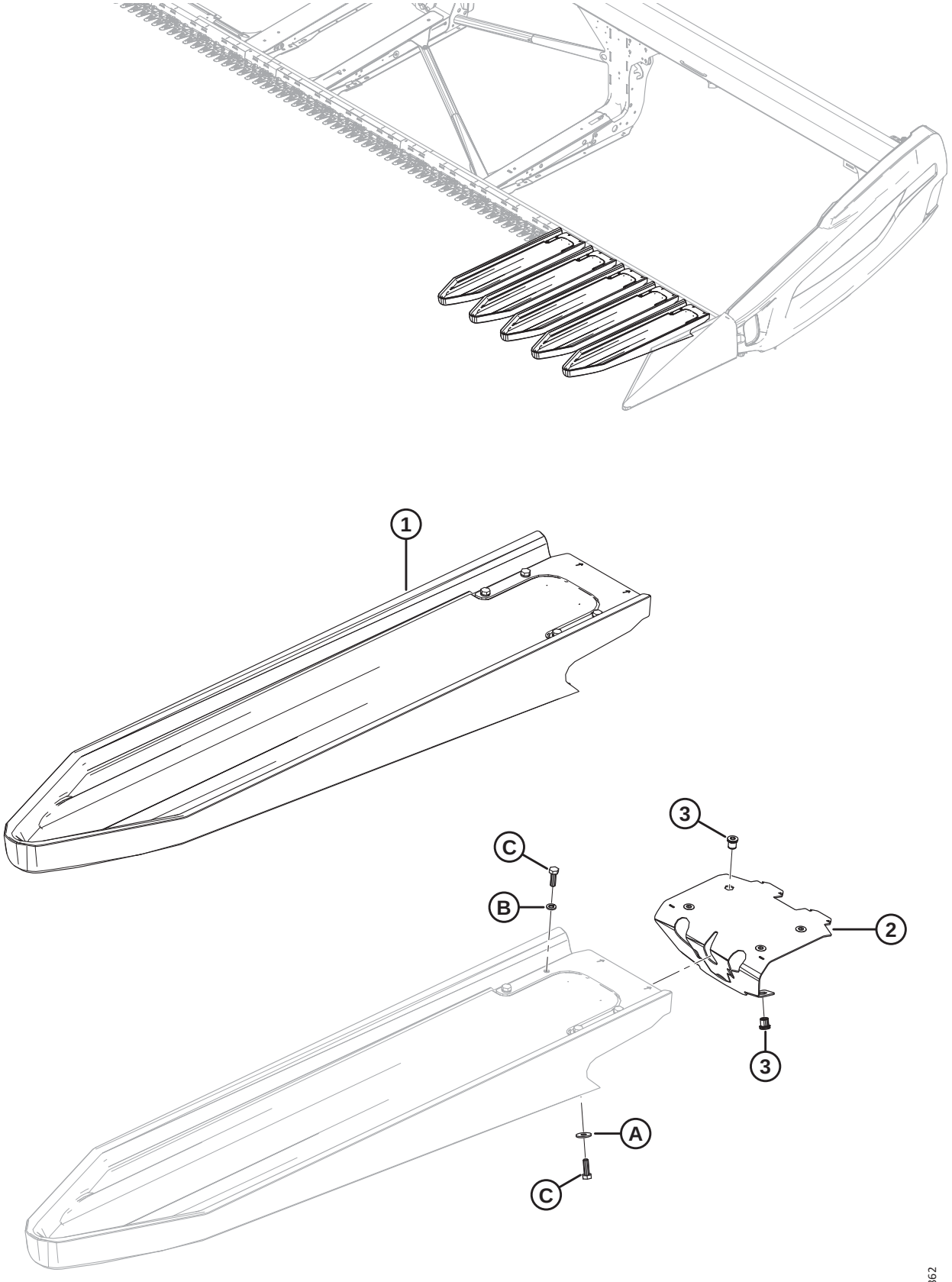

(OPTION) SUNFLOWER ATTACHMENT – PANS

NOTE:

The Sunflower Attachment is compatible with pointed knife guards only.

Ref	Part Number	Description	Qty	Serial Number
	B7303	KIT – 2 SERIES SUNFLOWER PAN (5 PANS) [623]		
	119737	KIT – 2 SERIES SUNFLOWER PAN (5 PANS)		
1	119529	PAN – SUNFLOWER QUICK ATTACH [624]	5	
2	119726	ASSEMBLY – PAN LATCH [625]	5	
3	252179	RIVNUT – M8 X 1.25 HEX0.7-3.8	30	
A	184709	WASHER – FLAT LARGE M8-200HV		
B	30716	WASHER – LOCK SPRING M8-CS-1055-1065-AA1J		
C	184652	BOLT – HEX HD TFL M8 X 1.25 X 25-8.8-AA1J		

623. Kit contains 5 pans. Base kit (B7302) contains pans for FD230 header. FD235 requires 1 pan kit, FD240/FD241 requires 2 pan kits, FD245 requires 3 pan kits, and FD250 requires 4 pan kits. Kits are available through Whole Goods only.
624. Includes latch assembly (MD #119726), clamp (NSS), six bolts (MD #184652), four lock spring washers (MD #30716), and two flat washers (MD #184709).
625. Includes six rivnuts (MD #252179).

153 (Option) Upper Cross Auger – Two-Piece Auger (FD225, FD230, FD235, and FD241)

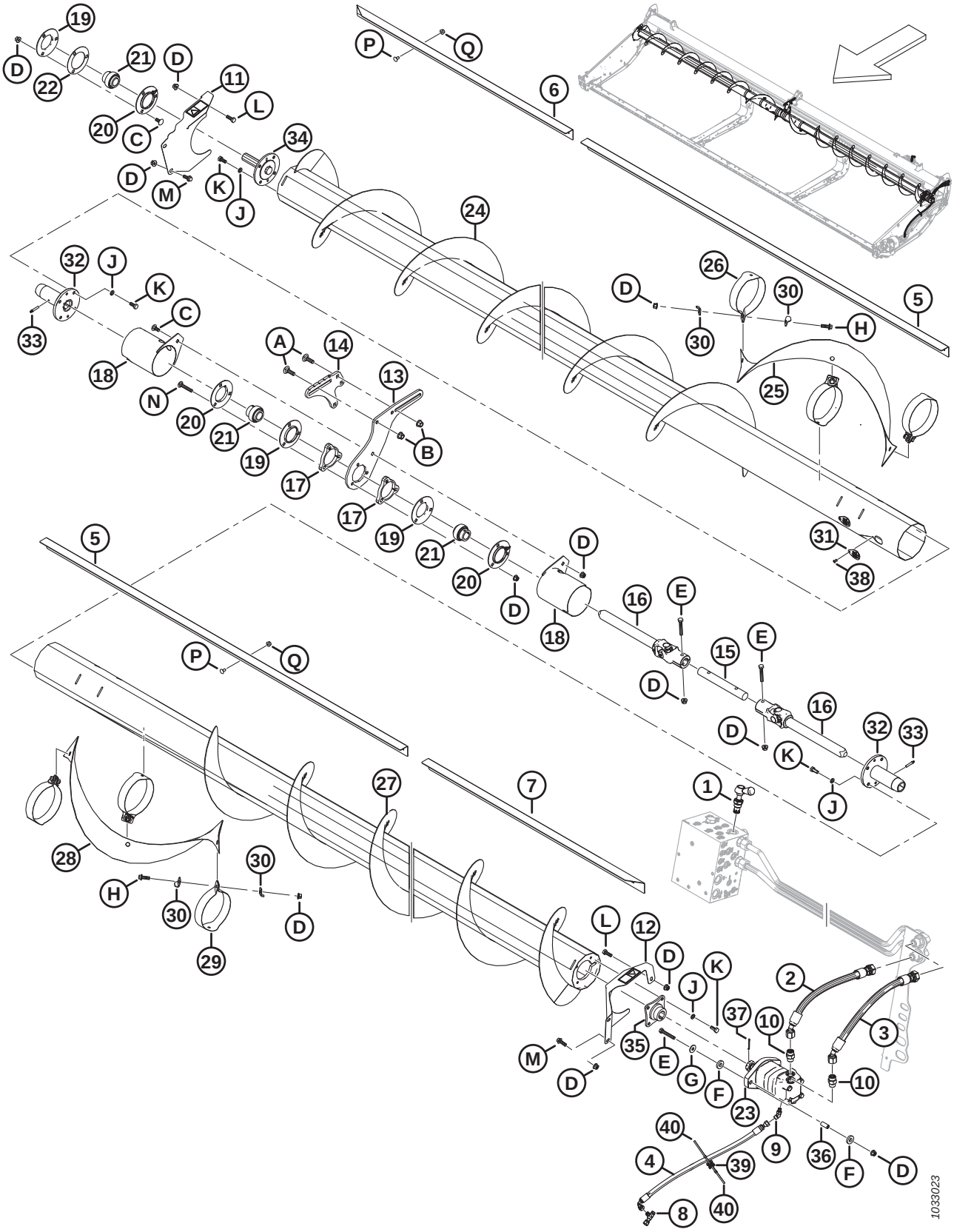

(OPTION) UPPER CROSS AUGER – TWO-PIECE AUGER (FD225, FD230, FD235, AND FD241)

Ref	Part Number	Description	Qty	Serial Number
	B6413	KIT – FD225 UPPER CROSS AUGER [626]		
	B6414	KIT – FD230 UPPER CROSS AUGER [626]		
	B6415	KIT – FD235 UPPER CROSS AUGER [626]		
	B6416	KIT – FD241 UPPER CROSS AUGER [626]		
1	283571	VALVE – BYPASS	1	
	245158	SEAL KIT		
2	283061	HOSE – HYD	1	
3	283062	HOSE – HYD	1	
4	283077	HOSE – HYD	1	
5	275521	DEFLECTOR – INBOARD 30, 35, AND 41 FT [627]	2	
6	275530	DEFLECTOR – 25 FT	1	
	275533	DEFLECTOR – RH OUTBOARD 30 FT	1	
	275543	DEFLECTOR – RH OUTBOARD 35 FT	1	
	275614	DEFLECTOR – RH OUTBOARD 41 FT	1	
7	275530	DEFLECTOR – 25 FT	1	
	275532	DEFLECTOR – LH OUTBOARD 30 FT	1	
	275542	DEFLECTOR – LH OUTBOARD 35 FT	1	
	275524	DEFLECTOR – LH OUTBOARD 41 FT	1	
8	252621	FITTING – TEE HYD	1	
	135957	O-RING – Ø1.78 X Ø7.65		
9	252307	FITTING – ELBOW 45° HYD	1	
	50223	O-RING – Ø1.83 X Ø8.92		
	135957	O-RING – Ø1.78 X Ø7.65		
10	184461	FITTING – ADAPTER HYD	2	
	44210	O-RING – Ø2.46 X Ø19.18		
	135867	O-RING – Ø1.78 X Ø15.60		
11	233725	SHIELD – ASSEMBLY RH C/W DECAL	1	
12	233724	SHIELD – ASSEMBLY LH C/W DECAL	1	
13	233738	PLATE – SUPPORT, CENTER SLIDING	1	
14	233736	PLATE – SUPPORT, CENTER FIXED	1	
15	233519	SHAFT	1	
16	233513	JOINT – UNIVERSAL	2	
17	233450	PLATE – SPACER	2	
18	233371	GUARD – WELDT	2	
19	49306	FLANGE	3	
20	30661	FLANGE	3	
21	21859	BEARING – SPH OD EXT INNER RACE 1 3/16 BORE	3	
22	172340	SHIM	1	
23	283555	MOTOR – HYD-100 CC SAE B	1	
	174304	SEAL KIT – EATON 2000 MOTOR		
	137375	NUT – SLTD JAM 1.0-20 UNEF		

626. Kits are available through Whole Goods only.
627. Inboard deflectors (MD #275521) are not used on FD225 headers.

(OPTION) UPPER CROSS AUGER – TWO-PIECE AUGER (FD225, FD230, FD235, AND FD241)

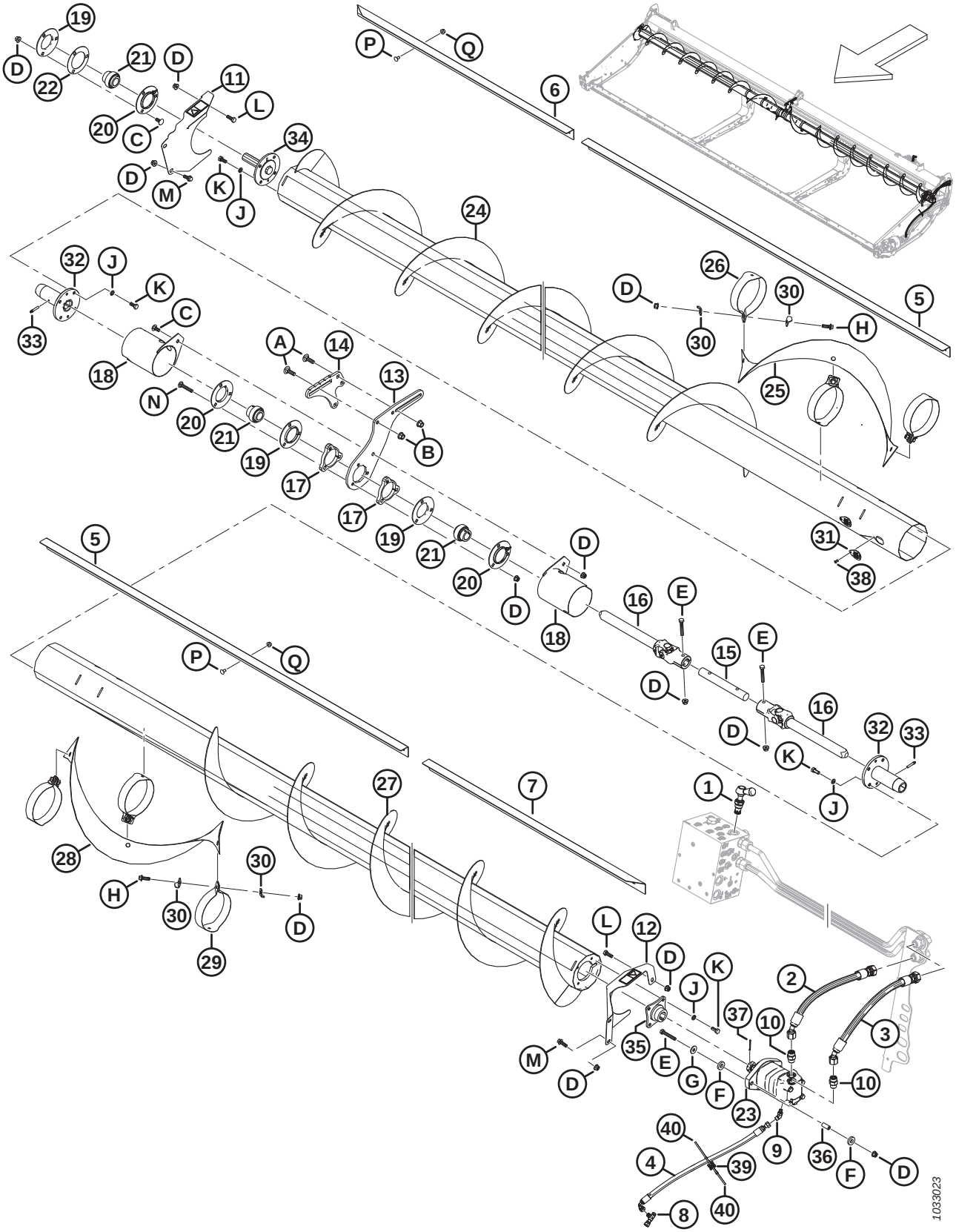

(OPTION) UPPER CROSS AUGER – TWO-PIECE AUGER (FD225, FD230, FD235, AND FD241)

Ref	Part Number	Description	Qty	Serial Number
24	233654	AUGER – WELDT RH (FD225) [628]	1	
	233656	AUGER – WELDT RH (FD230) [629]	1	
	233658	AUGER – WELDT RH (FD235) [630]	1	
	233660	AUGER – WELDT RH (FD241) [631]	1	
25	233705	FLIGHTING – RH	1	
26	233621	STRAP – RH	3	
27	233655	AUGER – WELDT LH (FD225) [628]	1	
	233657	AUGER – WELDT LH (FD230) [629]	1	
	233659	AUGER – WELDT LH (FD235) [630]	1	
	233661	AUGER – WELDT LH (FD241) [631]	1	
28	233706	FLIGHTING – LH	1	
29	233622	STRAP – LH	3	
30	233623	PLATE	12	
31	233625	COVER	4	
32	233514	HUB – WELDT UCA SLIDING	2	
33	30934	FITTING – 1/4-28 TAPER THD (LUBRICATION)	2	
34	233447	HUB – MACHINED	1	
35	233443	HUB – WELDT, UCA 1.25 TAPER SHAFT	1	
36	233445	SPACER	2	
37	18606	PIN – COTTER 1/8 DIA X 1.5 ZP	1	
38	18768	RIVET – BLIND Ø0.188 IN. X 0.251 TO 0.375 GRIP RANGE	4	
39	134442	SPACER – DUAL SWIVEL SADDLE	1	
40	21763	FASTENER – CABLE TIE, BLACK	2	
A	135900	BOLT – RHSN TFL M12 X 1.75 X 40-8.8-ZINC		
B	136431	NUT – HEX FLG CTR LOC M12 X 1.75-10		
C	135785	BOLT – RHSN M10 X 1.5 X 25-8.8-AA1J		
D	135799	NUT – HEX FLG CTR LOC M10 X 1.5-10		
E	108172	BOLT – HEX HD M10 X 1.5 X 65-8.8-AA1J		
F	233446	WASHER – RUBBER		
G	184712	WASHER – FLAT LARGE M10-200HV		
H	184665	BOLT – HEX FLG HD M10 X 1.5 X 30-10.9-AA1J		
J	30632	WASHER – LOCK SPRING M10		
K	30627	BOLT – HEX HD TFL M10 X 1.5 X 25-8.8-A3L		
L	184661	BOLT – HEX HD TFL M10 X 1.5 X 30-8.8-AA1J		
M	184665	BOLT – HEX FLG HD M10 X 1.5 X 30-10.9-AA1J		
N	136113	BOLT – RHSN M10 X 1.5 X 60-8.8-AA1J		
P	191489	BOLT – RHSSN TFL M8 X 1.25 X 16-8.8-AA1J		
Q	135337	NUT – HEX FLG CTR LK M8 X 1.25-8-AA1J		

628. Used for FD225 headers.
629. Used for FD230 headers.
630. Used for FD235 headers.
631. Used for FD241 headers.

154 (Option) Upper Cross Auger – Three-Piece Auger (FD240, FD245, and FD250)

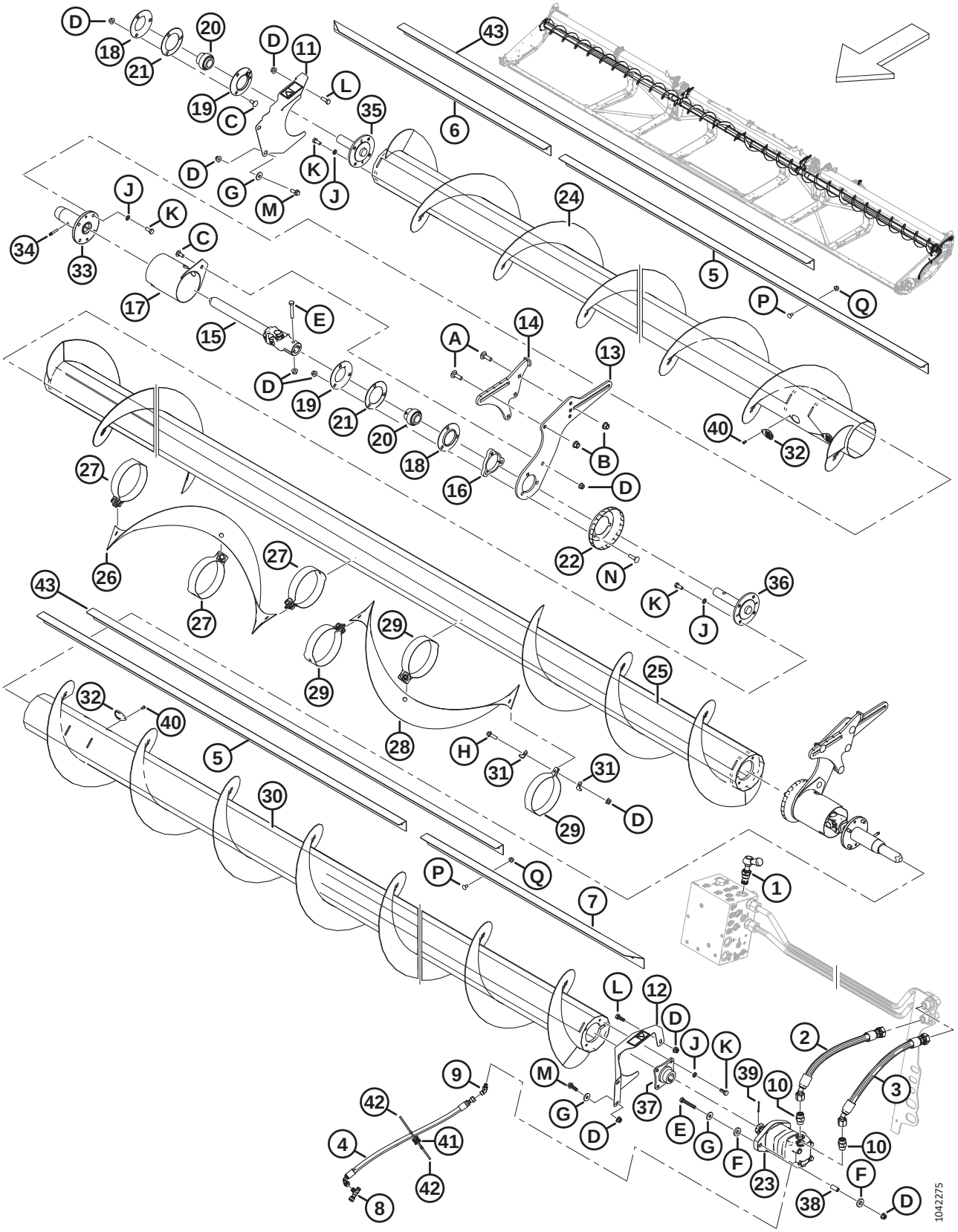

(OPTION) UPPER CROSS AUGER – THREE-PIECE AUGER (FD240, FD245, AND FD250)

Ref	Part Number	Description	Qty	Serial Number
	B6417	KIT – FD240 UPPER CROSS AUGER [632]		
	B6418	KIT – FD245 UPPER CROSS AUGER [632]		
	B6419	KIT – FD250 UPPER CROSS AUGER [632]		
1	283571	VALVE – BYPASS	1	
	245158	SEAL KIT		
2	283061	HOSE – HYD	1	
3	283062	HOSE – HYD	1	
4	283077	HOSE – HYD	1	
5	275521	DEFLECTOR – INBOARD 40 FT	2	
	275692	DEFLECTOR – INBOARD 45 AND 50 FT	2	
6	275625	DEFLECTOR – RH OUTBOARD 40 AND 50 FT	1	
	275543	DEFLECTOR – RH OUTBOARD 45 FT	1	
7	275624	DEFLECTOR – LH OUTBOARD 40 AND 50 FT	1	
	275542	DEFLECTOR – LH OUTBOARD 45 FT	1	
8	252621	FITTING – TEE HYD	1	
	135957	O-RING – Ø1.78 X Ø7.65		
9	252307	FITTING – ELBOW 45° HYD	1	
	50223	O-RING – Ø1.83 X Ø8.92		
	135957	O-RING – Ø1.78 X Ø7.65		
10	184461	FITTING – ADAPTER HYD	2	
	44210	O-RING – Ø2.46 X Ø19.18		
	135867	O-RING – Ø1.78 X Ø15.60		
11	233725	SHIELD – ASSEMBLY RH C/W DECAL	1	
12	233724	SHIELD – ASSEMBLY LH C/W DECAL	1	
13	233741	PLATE – SUPPORT, CENTER SLIDING	2	
14	233740	SUPPORT – WELDMENT, CENTER FIXED	2	
15	233513	JOINT – UNIVERSAL	2	
16	233450	PLATE – SPACER	2	
17	233371	GUARD – WELDT	2	
18	49306	FLANGE	2	
19	30661	FLANGE	2	
20	21859	BEARING – SPH OD EXT INNER RACE 1 3/16 BORE	3	
21	172340	SHIM	2	
22	233552	SHIELD – FORMED	2	
23	283555	MOTOR – HYD-100 CC SAE B	1	
	174304	SEAL KIT – EATON 2000 MOTOR		
	137375	NUT – SLTD JAM 1.0-20 UNEF		
24	233662	AUGER – WELDT RH (FD240 AND FD245) [633]	1	
	233664	AUGER – WELDT RH (FD250) [634]	1	

632. Kits are available through Whole Goods only.
633. Used for FD240 and FD245 headers.
634. Used for FD250 headers.

(OPTION) UPPER CROSS AUGER – THREE-PIECE AUGER (FD240, FD245, AND FD250)

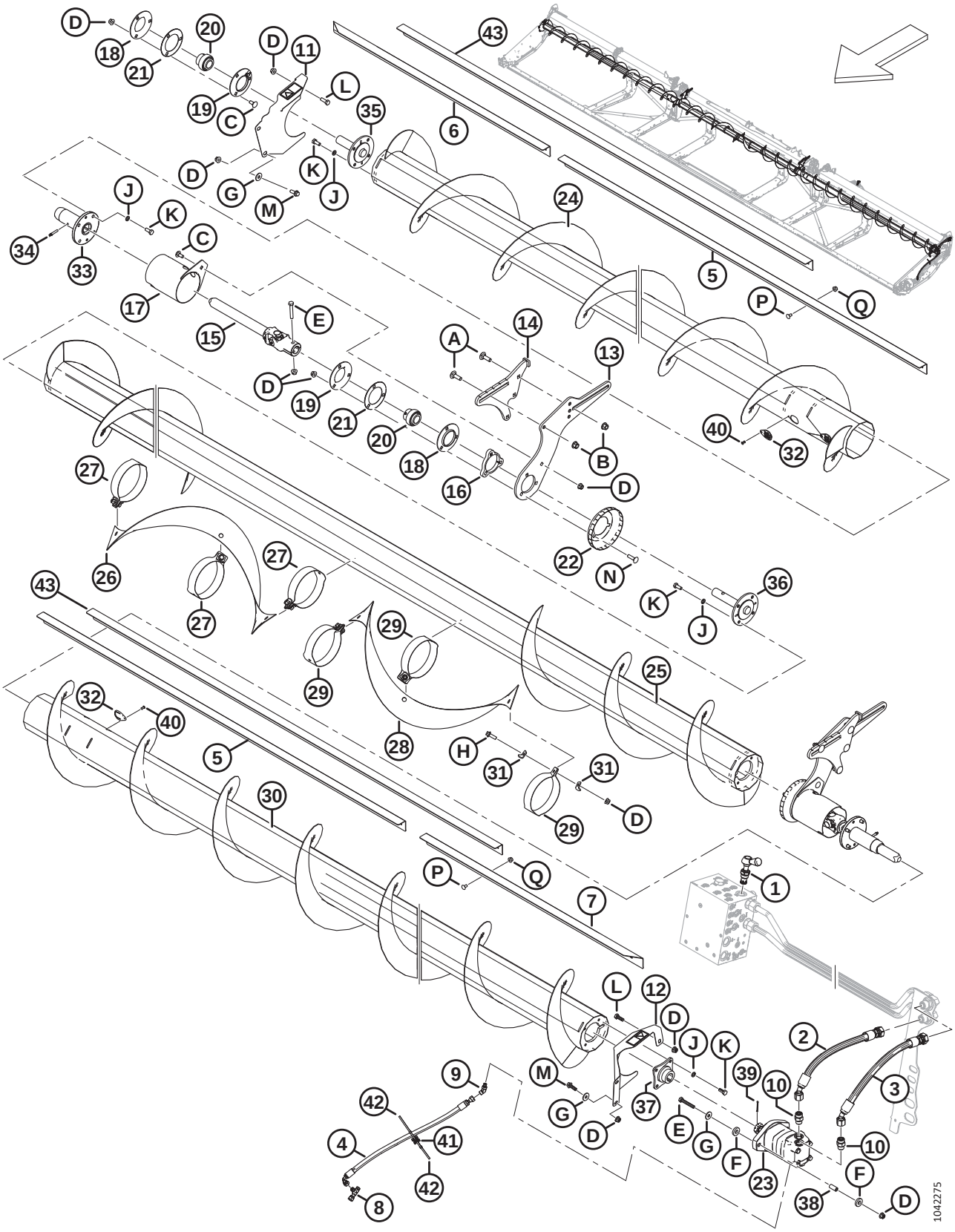

(OPTION) UPPER CROSS AUGER – THREE-PIECE AUGER (FD240, FD245, AND FD250)

Ref	Part Number	Description	Qty	Serial Number
25	233668	AUGER – WELDT CENTER (FD240) [635]	1	
	233669	AUGER – WELDT CENTER (FD245 AND FD250) [636]	1	
26	233705	FLIGHTING – RH	1	
27	233621	STRAP – RH	3	
28	233706	FLIGHTING – LH	1	
29	233622	STRAP – LH	3	
30	233663	AUGER – WELDT LH (FD240 AND FD245) [633]	1	
	233665	AUGER – WELDT LH (FD250) [634]	1	
31	233623	PLATE	12	
32	233625	COVER	4	
33	233514	HUB – WELDT, UCA SLIDING	2	
34	30934	FITTING – 1/4-28 TAPER THD (LUBRICATION)	2	
35	233447	HUB – MACHINED, UCA IDLE END	1	
36	233516	HUB – MACHINED, UCA CENTER	2	
37	233443	HUB – WELDT, UCA 1.25 TAPER SFAFT	1	
38	233445	SPACER	2	
39	18606	PIN – COTTER 1/8 DIA X 1.5 ZP	1	
40	18768	RIVET – BLIND Ø0.188 IN. X 0.251 TO 0.375 GRIP RANGE	4	
41	134442	SPACER – DUAL SWIVEL SADDLE	1	
42	21763	FASTENER – CABLE TIE, BLACK	2	
43	275691	DEFLECTOR – MIDDLE 45 AND 50 FT [637]	2	
A	135900	BOLT – RHSN TFL M12 X 1.75 X 40-8.8-ZINC		
B	136431	NUT – HEX FLG CTR LOC M12 X 1.75-10		
C	135785	BOLT – RHSN M10 X 1.5 X 25-8.8-AA1J		
D	135799	NUT – HEX FLG CTR LOC M10 X 1.5-10		
E	108172	BOLT – HEX HD M10 X 1.5 X 65-8.8-AA1J		
F	233446	WASHER – RUBBER		
G	184712	WASHER – FLAT LARGE M10-200HV		
H	184665	BOLT – HEX FLG HD M10 X 1.5 X 30-10.9-AA1J		
J	30632	WASHER – LOCK SPRING M10		
K	30627	BOLT – HEX HD TFL M10 X 1.5 X 25-8.8-A3L		
L	184661	BOLT – HEX HD TFL M10 X 1.5 X 30-8.8-AA1J		
M	184665	BOLT – HEX FLG HD M10 X 1.5 X 30-10.9-AA1J		
N	152732	BOLT – RHSN M10 X 1.5 X 40-8.8-AA1J		
P	191489	BOLT – RHSSN TFL M8 X 1.25 X 16-8.8-AA1J		
Q	135337	NUT – HEX FLG CTR LK M8 X 1.25-8-AA1J		

635. Used for FD240 headers.
636. Used for FD245 and FD250 headers.
637. Middle deflector (MD #275691) is placed between the inboard and outboard deflectors for FD245 and FD250 headers only.

155 (Option) VertiBlade™ Vertical Knife Kit

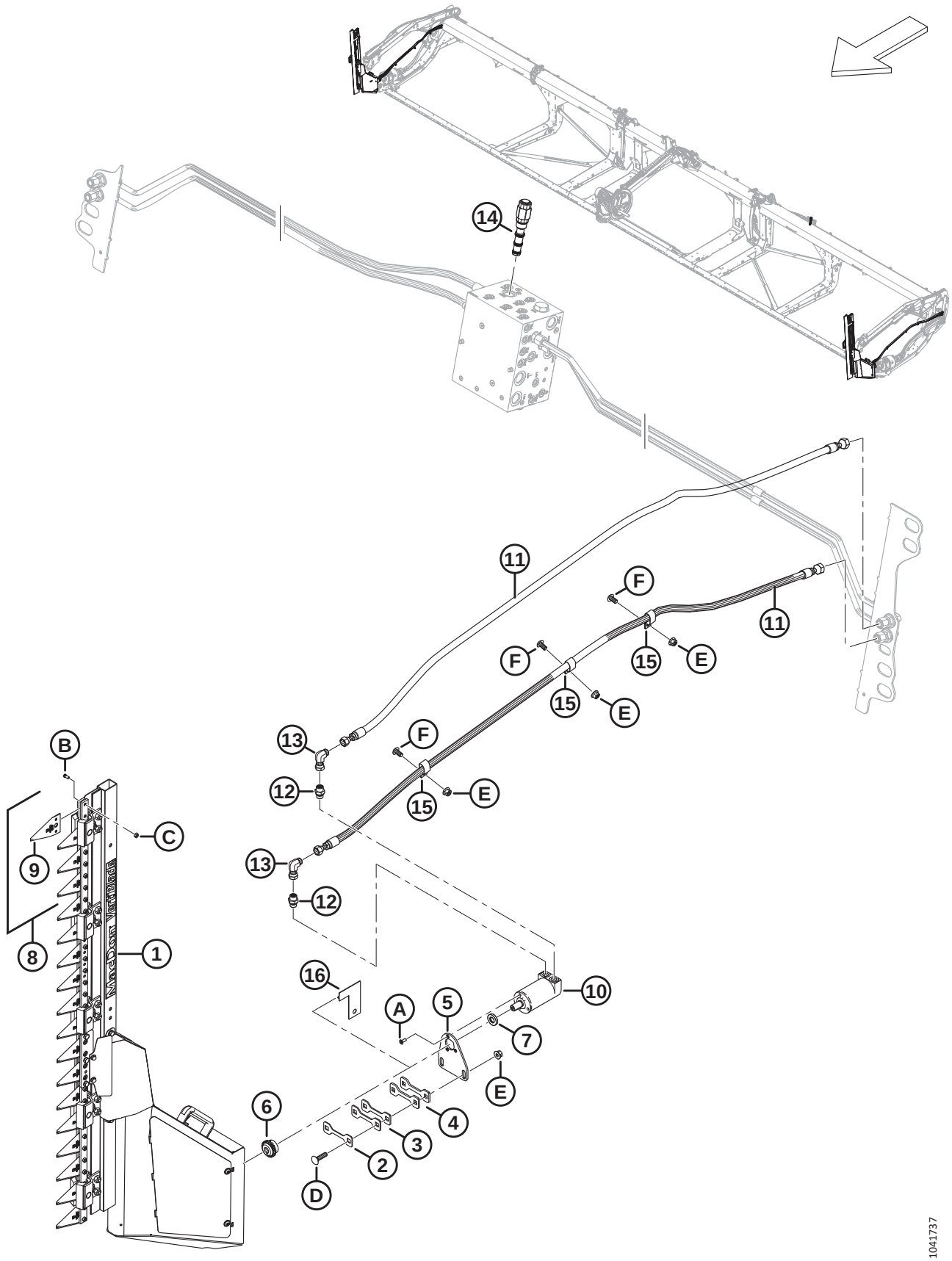

Ref	Part Number	Description	Qty	Serial Number
	B7029	KIT – VERTIBLADE VERTICAL KNIVES [638]		
	B7464	KIT – VERTICAL KNIFE COMPONENTS [639]		
	B7466	KIT – VERTICAL KNIFE [640]		
1	313502	KNIFE – VERTICAL ASSEMBLY, RH [641]	1	
	313501	KNIFE – VERTICAL ASSEMBLY, LH [641]	1	
2	313750	SHIM – 2 MM THK	A/R	
3	313749	SHIM – 3 MM THK	A/R	
4	313745	SHIM – 4.5 MM THK	A/R	
5	313744	SUPPORT – MOTOR VERTICAL KNIFE	2	
6	313808	HUB	2	
7	313801	SPACER	2	
8	313797	KIT – VERTICAL KNIFE SECTIONS [642]	A/R	
9	313788	SECTION – VERTICAL KNIFE	A/R	
10	304611	MOTOR – HYDRAULIC	2	
11	283066	HOSE – HYD	4	
12	136653	FITTING – ADAPTER	4	
	135865	O-RING – Ø1.78 X Ø9.25		
	136654	O-RING – 1.50 X 2.10 X 14.70		
13	136249	FITTING – ELBOW 90° HYD	4	
14	283008	VALVE – PRIORITY FLOW REG (FRRV) [643]	1	
	283579	SEAL KIT		
15	135235	CLAMP – DOUBLE HOSE INSULATED	6	
16	313780	GUIDE – VERTICAL KNIFE [644]	1	
A	320220	SCREW – TORX CSK HD TFL M6 X 1 X 16-SPCL-8.8-ZINC		
B	313789	SCREW – VERTICAL KNIFE SECTION		
C	313790	NUT – VERTICAL KNIFE SECTION		
D	152732	BOLT – RHSN M10 X 1.5 X 40-8.8-AA1J		

638. Kits are available through Whole Goods only.
639. For European markets. This kit includes everything in base vertical knife kit B7029 less the left and right vertical knives (MD #313501 and 313502), motors (MD #304611), knife sections kit (MD #313797), spacers (MD #313801), and hubs (MD #313808). To complete European vertical knives, order European Vertical Knife kit B7466. Kits are available through Whole Goods only.
640. For European markets. This kit includes the left and right vertical knives (MD #313501 and 313502), motors (MD #304611), knife sections kit (MD #313797), spacers (MD #313801), and hubs (MD #313808) only. To complete European vertical knives, order European Vertical Knife Components kit B7464. Kits are available through Whole Goods only.
641. For vertical knife components, refer to Section *156 (Option) VertiBlade™ Vertical Knife Components, page 385*.
642. The kit includes four vertical knife sections (MD #313788), eight vertical knife section screws (MD #313789), and eight vertical knife section nuts (MD #313790).
643. Connects to port FRRV.
644. The guide is used as a tool to determine the correct number of shims (MD #313750, MD #313749, and MD #313745) required to fill the gap between the frame plate and the guide. The guide is removed after determining the gap. Refer to the installation instructions for more details.

(OPTION) VERTIBLADE™ VERTICAL KNIFE KIT

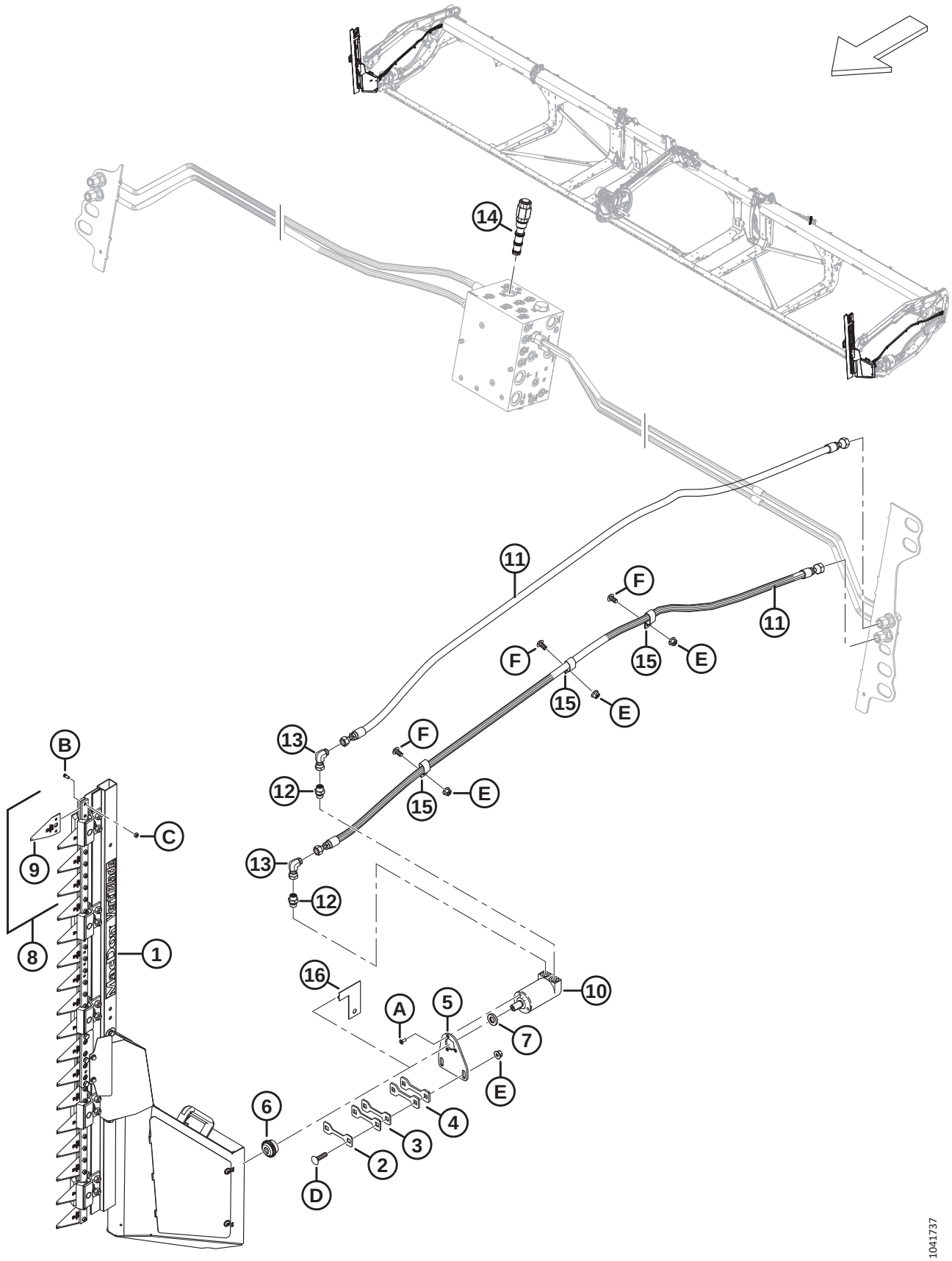

Ref	Part Number	Description	Qty	Serial Number
E	135799	NUT – HEX FLG CTR LOC M10 X 1.5-10		
F	136395	SCREW – TORX TRUSS HD M10 X 1.5 X 20 X SPCL-8.8-A3L		

156 (Option) VertiBlade™ Vertical Knife Components

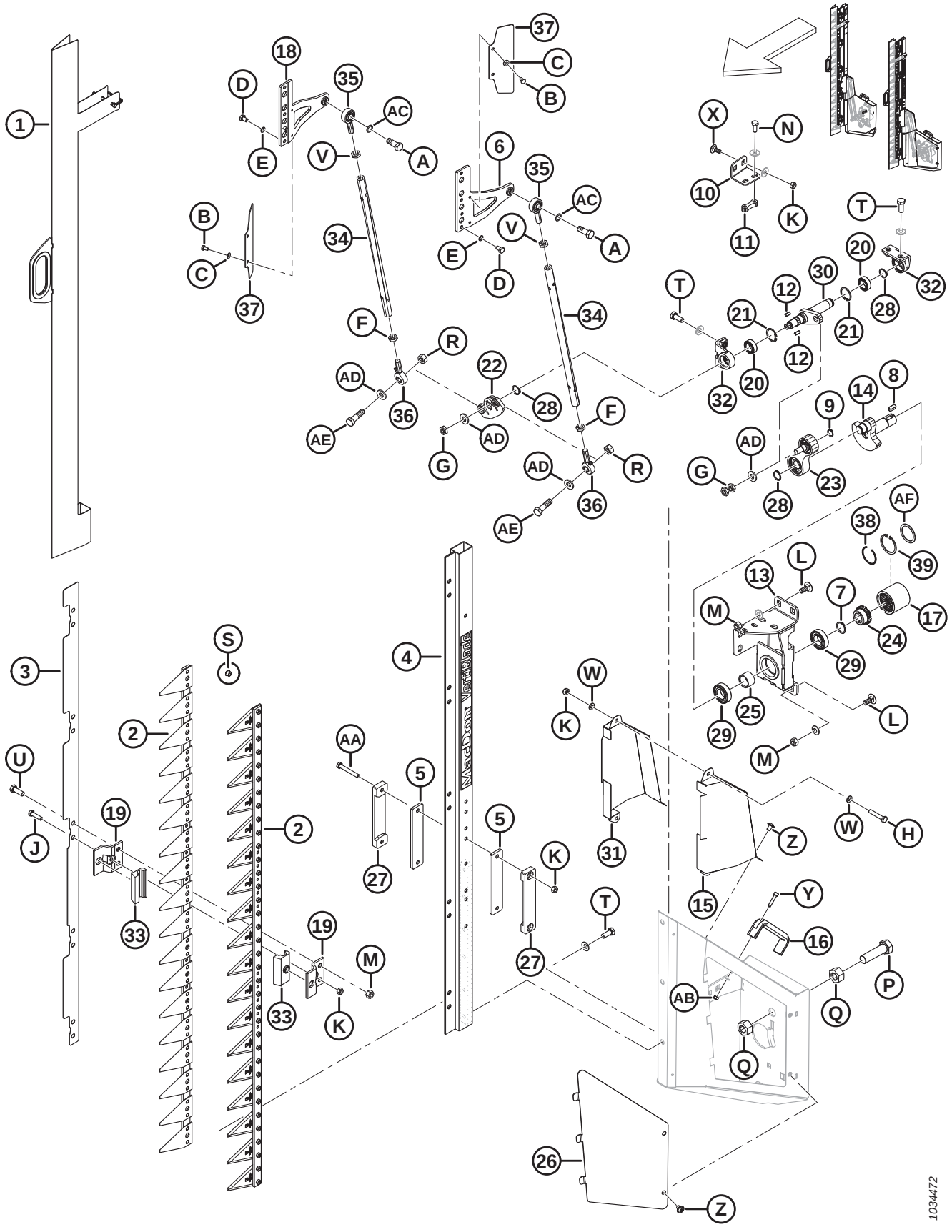

(OPTION) VERTIBLADE™ VERTICAL KNIFE COMPONENTS

Ref	Part Number	Description	Qty	Serial Number
	313501	KNIFE – VERTICAL ASSEMBLY, LH		
	313502	KNIFE – VERTICAL ASSEMBLY, RH		
1	313798	SHIELD – VERTICAL KNIFE	2	
2	313799	KNIFE ASSY – VERTICAL KNIFE	4	
3	313800	PLATE – ADAPTER POSITIONING	2	
4	313802	BAR	2	
5	313805	GUIDE – INNER	4	
6	313807	KNIFEHEAD – LH	2	
7	313810	RING – RETAINING EXTERNAL	2	
8	313815	KEY	2	
9	313819	RING – RETAINING EXTERNAL	2	
10	313882	BRACKET – CRANK DRIVE RH	1	
	313820	BRACKET – CRANK DRIVE LH	1	
11	313821	PLATE – THREADED	2	
12	313824	KEY	4	
13	313884	SUPPORT – RH DRIVE WELDMENT	1	
	313825	SUPPORT – LH DRIVE WELDMENT	1	
14	313828	SHAFT – CRANK	2	
15	313836	COVER – RH KNIFE OUTER	2	
	313835	COVER – LH KNIFE OUTER	2	
16	313841	HANDLE	2	
17	313809	COUPLING	2	
18	313869	KNIFEHEAD – RH	2	
19	313804	GUIDE – KNIFE	20	
20	313817	BEARING – ANGULAR	4	
21	313818	RING – RETAINING INTERNAL	4	
22	313826	ARM – OSCILLATING	2	
23	313827	PITTMAN ASSEMBLY	2	
24	313813	HUB	2	
25	313814	SLEEVE – CRANKSHAFT SPACER	2	
26	313834	COVER – RH SIDE	1	
	313833	COVER – LH SIDE	1	
27	313806	GUIDE – OUTER	4	
28	313811	RING – RETAINING EXTERNAL	6	
29	313812	BEARING	4	
30	313883	SHAFT – DRIVE, RH	1	
	313822	SHAFT – DRIVE, LH	1	
31	313838	COVER – RH KNIFE INNER	1	
	313837	COVER – LH KNIFE INNER	1	
32	313816	SUPPORT – OUTPUT SHAFT	4	
33	313803	GUIDE	20	
34	313829	TUBE	4	
35	313830	JOINT – BALL	4	
36	313831	JOINT – BALL BEARING	4	

(OPTION) VERTIBLADE™ VERTICAL KNIFE COMPONENTS

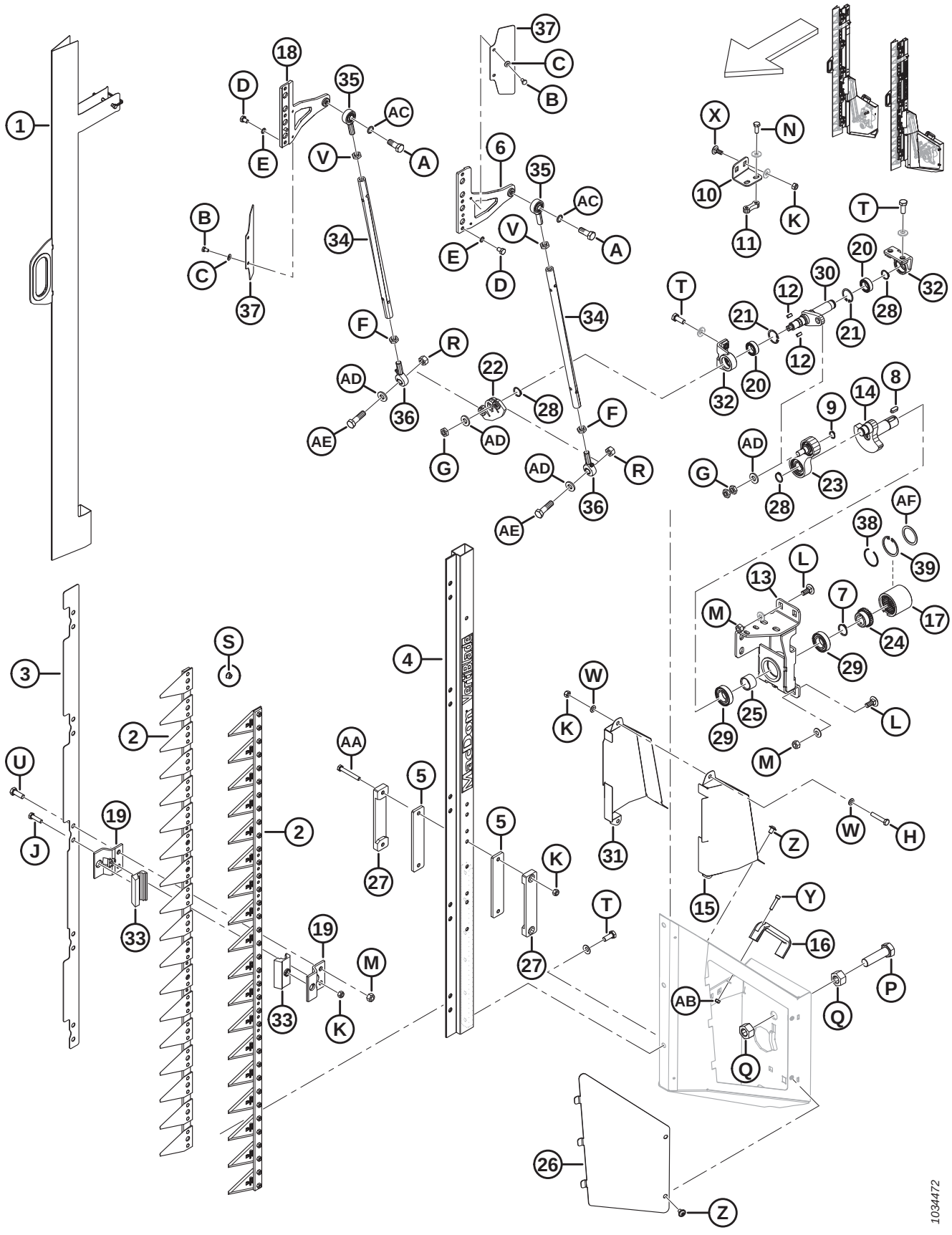

(OPTION) VERTIBLADE™ VERTICAL KNIFE COMPONENTS

Ref	Part Number	Description	Qty	Serial Number
37	313839	DEFLECTOR	4	
38	340077	RING – RETAINING [645]	1	
39	340078	RING – INTERNAL [645]	1	
	23165	DECAL – 50 HR LUBE		
	313881	DECAL – VERTICAL KNIFE HAZARD		
A	313847	SCREW – M12 X 1.75 X 32		
B	136561	BOLT – HEX HD TFL M6 X 1 X 10-8.8-AA1J		
C	30631	WASHER – LOCK SPRING M6		
D	313848	SCREW – HEX M8 X 1 X 12		
E	313849	WASHER – LOCK SCHNORR		
F	313844	NUT – HEX, M12 X 1.75 LH THD LOCK		
G	313845	NUT – HEX M12 X 1.5		
H	30660	BOLT – HEX HD M8 X 1.25 X 45-8.8-AA1J		
J	50140	BOLT – HEX HD M8 X 1.25 X 30-8.8-AA1J		
K	135337	NUT – HEX FLG CTR LK M8 X 1.25-8-AA1J		
L	135785	BOLT – RHSN M10 X 1.5 X 25-8.8-AA1J		
M	135799	NUT – HEX FLG CTR LOC M10 X 1.5-10		
N	136302	BOLT – HEX SER FLG HD TFL M8 X 1.25 X 20-8.8-ZINC		
P	136339	BOLT – HEX HD FINE TFL M20 X 1.5 X 70 X 8.8-ZINC		
Q	136342	NUT – HEX FINE M20 X 1.5 X 10-AA3L		
R	136759	NUT – HEX CTR LOC M12 X 1.75-8-AA1J		
S	152668	NUT – HEX FLG CTR LOC M6 X 1-8		
T	152670	BOLT – HEX FLG HD M10 X 1.5 X 20-SPC-8.8-AA1J		
U	184661	BOLT – HEX HD TFL M10 X 1.5 X 30-8.8-AA1J		
V	184696	NUT – HEX THIN M12 X 1.75-05-AA1J		
W	184708	WASHER – FLAT M8-200HV-AA1J		
X	197171	BOLT – RHSN M8 X 1.25 X 20-8.8-ZINC		
Y	252236	SCREW – HEX SOC M6 X 1 X 25-10.9 AA1T		
Z	252292	SCREW – HEX SOC BTN HD M8 X 1.25 X 12-10.9-AA1J		
AA	252398	BOLT – HEX HD M8 X 1.25 X 60-8.8-ZINC		
AB	136773	NUT – HEX CTR LOC M6 X 1-8-AA1J		
AC	313846	WASHER – LOCK SCHNORR		
AD	313832	WASHER		
AE	313843	SCREW – M12 X 1.75 X 43		
AF	340076	WASHER [645]		

645. Service part for coupling (MD #313809).

157 Frame Components – Float Module

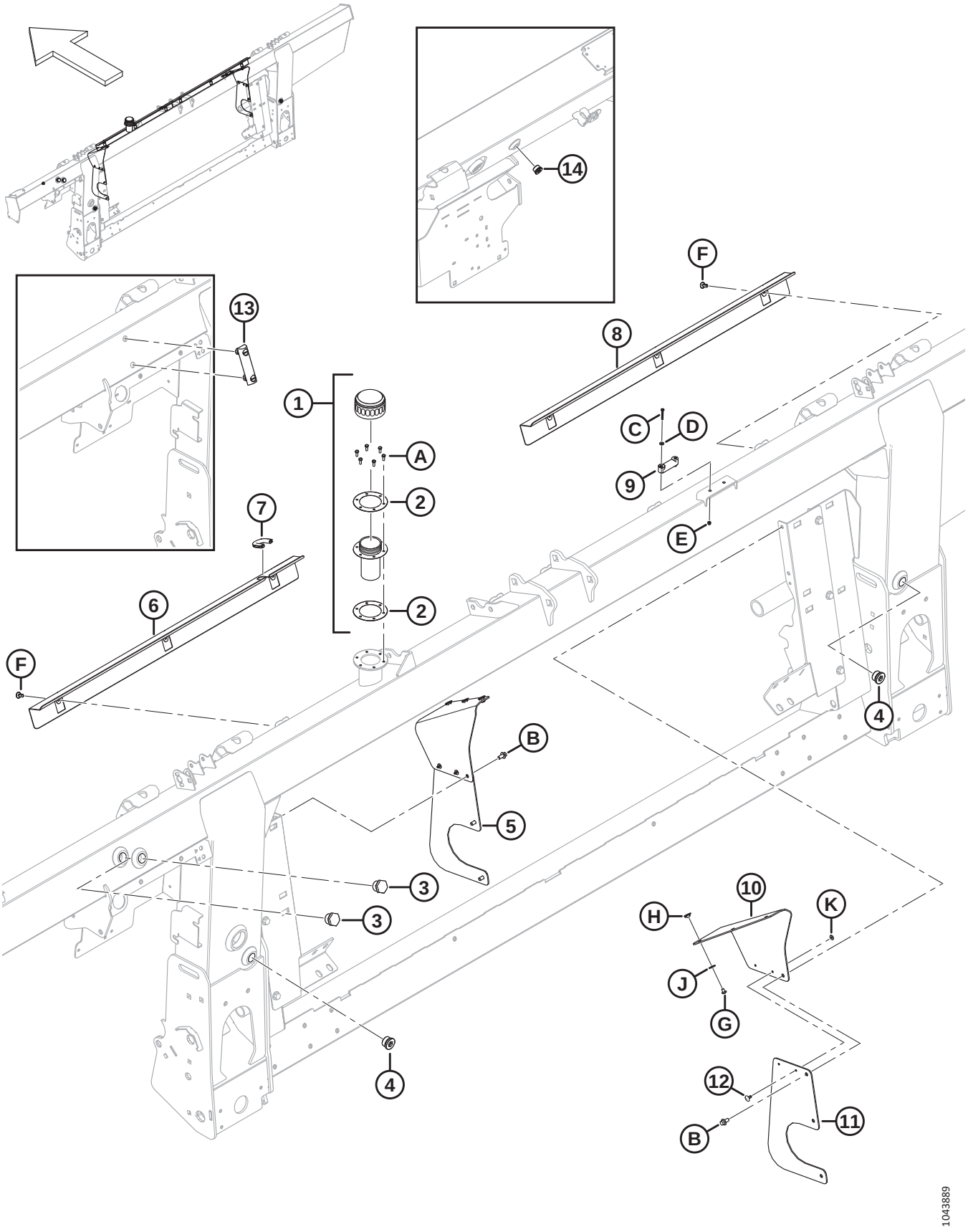

Ref	Part Number	Description	Qty	Serial Number
1	133942	CAP – OIL FILLER [646]	1	
2	304658	GASKET – OIL FILLER (2 PACK)	1	
3	304668	SIGHT GLASS (2022 AND PRIOR) [647]	2	
4	136269	PLUG – HEX SOCKET	2	
	30971	O-RING – Ø2.95 X Ø23.47		
5	357512	KIT – DUST COVER SIDES [648]	A/R	
6	**378133**	**COVER – LH**	**1**	
7	194082	MOULDING	1	
8	322870	COVER – RH	1	
9	322872	LEVEL – BUBBLE	1	
10	357174	FLAP – DUST COVER FILLER	2	
11	357173	COVER – FEED AUGER SIDE	2	
12	293053	RIVET – POP	4	
13	156696	GAUGE – LEVEL (2023 AND LATER) [649]	1	
14	**158174**	**FITTING – PLUG HYD 8 ORB HEX SOC** [650]	**A/R**	
	44209	**O-RING – 2.21 X 16.36**		
A	320397	SCREW – HEX HD TFL M5 X 0.8 X 12-8.8-PLAIN (2022 AND LATER)		421190–
	135873	SCREW – MACH #10-32 X 0.5 IN. HEX (2021 AND PRIOR)		–421189
B	136485	BOLT – HEX FLG HD TFL M8 X 1.25 X 16-8.8-AA1J		
C	320388	SCREW – PAN HD TFL M4 X 0.7 X 30-4.8-ZINC		
D	18798	WASHER – FLAT SAE 7/32 ID X 7/16 IN OD AA1J		
E	197320	NUT – HEX NYLOC M4 X 0.7-8-AA1J		
F	368221	KIT – PUSH-IN CLIP [651]		
G	252291	SCREW – PAN HD M6 X 1 X 8-8.8-AA1J		
H	252051	NUT – TEE M6		
J	184706	WASHER – FLAT LARGE M6-200HV		
K	293054	WASHER – FLAT LARGE M5-200HV-AA1J		

646. Remove the cap and gasket covering the fill hole during shipping (not shown). Retain six screws (MD #135873). Replace the cap and gasket with oil filler cap (MD #133942) which comes complete with oil cap (NSS), filler neck (NSS), and two gaskets (MD #304658). Use the six screws retained from the shipping cap to attach the oil filler cap to the frame. The oil filler cap comes shipped with the frame or can be ordered as a replacement.
647. Sight glass (MD #304668) is used for machines made in model year 2022 and prior.
648. This kit is used to service units with superseded side covers (MD #347558). The kit includes two dust cover filler flaps (MD #357174), two feed auger side covers (MD #357173), four pop rivets (MD #293053), and hardware.
649. Level gauge (MD #156696) is used for machines made in model year 2023 and later.
650. Plug fitting (MD #158174) is used only for float modules with an integrated hydraulic system.
651. Kit contains 6 push-in clips.

158 Pump, Gearbox, and Input Drive (Integrated Hydraulic System)

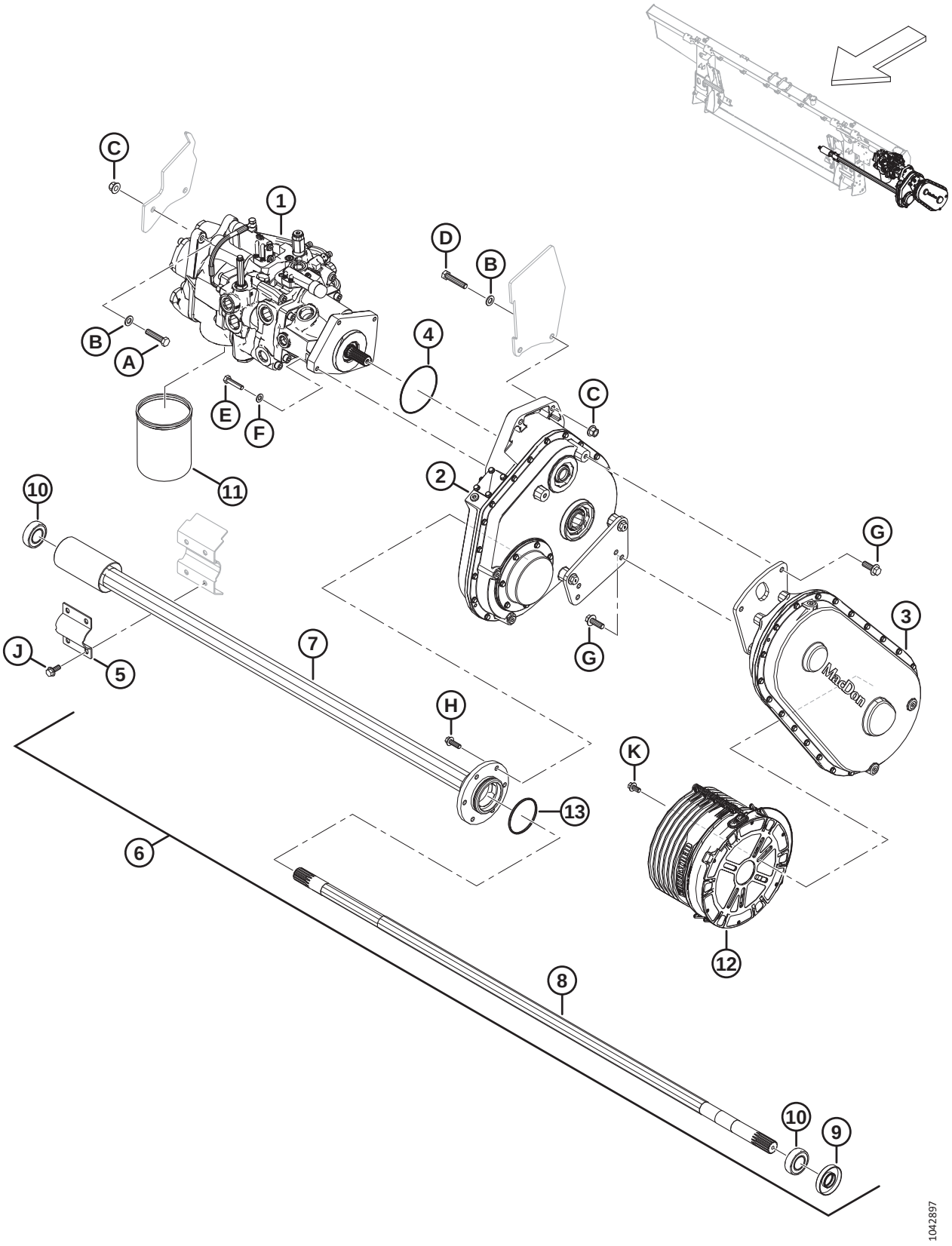

Ref	Part Number	Description	Qty	Serial Number
1	337774	PUMP – INTEGRATED [652]	1	
2	308725	DRIVE – FLOAT MODULE MAIN [653]	1	
3	308726	DRIVE – INPUT (CNH) [654]	1	
	337713	DRIVE – INPUT (JD) [655]	1	
	347001	DRIVE – INPUT (CLAAS) [656]	1	
	308863	DRIVE – INPUT (AGCO) [657]	1	
4	328713	O-RING – 2.62 X 113.97	1	
5	347185	CLAMP – AUGER PIVOT	1	
6	308732	ASSEMBLY – FEED AUGER SHAFT [658]	1	
7	328370	TUBE – OUTPUT	1	
8	308740	SHAFT – OUTPUT	1	
9	308755	SEAL – SHAFT	1	
10	21363	BEARING – SPH OD AND COLLAR C/W 2 SEALS	2	
11	320360	FILTER – HYD C/W 2X SEALS	1	
12	322561	GUARD – COUNTER CONE 250 MM	1	
13	252462	O-RING – 3.18 X 82.55	1	
A	152779	BOLT – HEX HD M12 X 1.75 X 55-8.8-AA1J		
B	184714	WASHER – FLAT REG M12-300HV		
C	136431	NUT – HEX FLG CTR LOC M12 X 1.75-10		
D	152274	BOLT – HEX HD M12 X 1.75 X 60-8.8-AA1J		
E	135335	BOLT – HEX HD M10 X 1.5 X 45-8.8-AA1J		
F	184711	WASHER – FLAT REG M10-200HV-AA1J		
G	152731	BOLT – HEX FLG HD TFL M12 X 1.75 X 35-10.9-AA1J		
H	184665	BOLT – HEX FLG HD M10 X 1.5 X 30-10.9-AA1J		
J	135783	BOLT – HEX FLG HD TFL M10 X 1.5 X 25-10.9-AA1J		
K	152655	BOLT – HEX FLG HD M10 X 1.5 X 20-8.8-AA1J		

652. For pump assembly, refer to Section *159 Pump Assembly (Integrated Hydraulic System), page 393*.
653. For gearbox assembly, refer to Section *164 Gearbox Assembly, page 407*.
654. Used with Case and New Holland combines. For input drive assembly, refer to Section *165 Input Drive Assembly, page 411*.
655. Used with John Deere combines. For input drive assembly, refer to Section *165 Input Drive Assembly, page 411*.
656. Used with CLAAS combines. For input drive assembly, refer to Section *165 Input Drive Assembly, page 411*.
657. Used with Challenger®, Gleaner®, IDEAL™, and Massey Ferguson® combines. For input drive assembly, refer to Section *165 Input Drive Assembly, page 411*.
658. The feed auger shaft assembly includes shaft seal (MD #308755), collar bearing (MD #21363), output tube (MD #328370), output shaft (MD #328202), insert bearing (MD #328371), O-ring (MD #252462), and two set screws (MD #320418).

159 Pump Assembly (Integrated Hydraulic System)

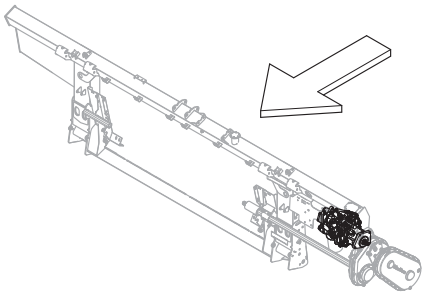

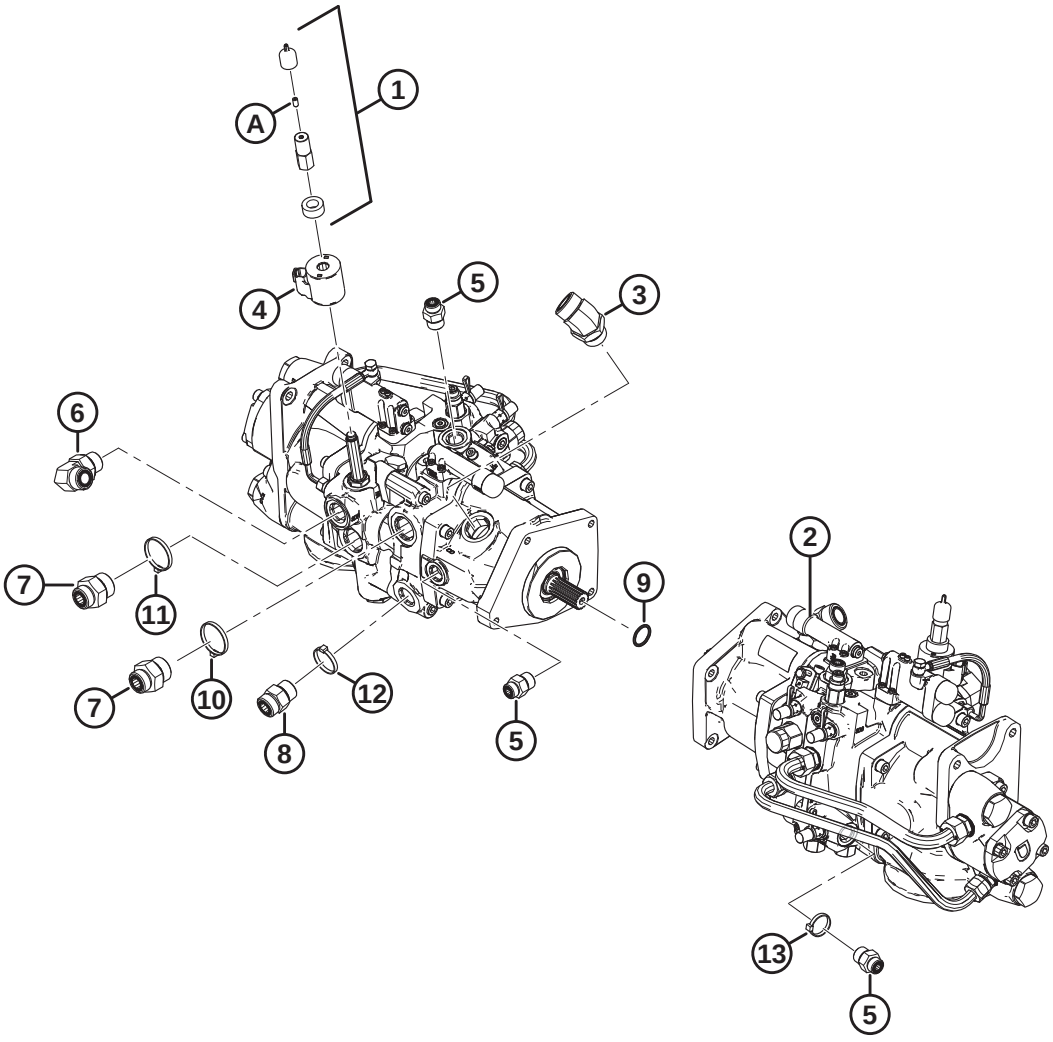

1034439

PUMP ASSEMBLY (INTEGRATED HYDRAULIC SYSTEM)

Ref	Part Number	Description	Qty	Serial Number
1	328262	KIT – MANUAL OVERRIDE [659]	1	
2	337774	PUMP – INTEGRATED [660]	1	
	322148	SEAL KIT		
3	252814	FITTING – ELBOW 45° HYD	1	
	135554	O-RING – 1.78 X 23.52		
	50220	O-RING – Ø2.95 X Ø29.74		
4	209045	COIL – SOLENOID	1	
5	184463	FITTING – ADAPTER HYD (M1, M2) [661]	3	
	44210	O-RING – Ø2.46 X Ø19.18		
	135866	O-RING – Ø1.78 X Ø12.42		
6	135821	FITTING – ELBOW 90° HYD (SDP) [662]	1	
	30971	O-RING – Ø2.95 X Ø23.47		
	135868	O-RING – Ø1.78 X Ø18.77		
7	135789	FITTING – ADAPTER (KP) [663]	2	
	50220	O-RING – Ø2.95 X Ø29.74		
	135868	O-RING – Ø1.78 X Ø18.77		
8	135788	FITTING – ADAPTER (SDR) [664]	1	
	30971	O-RING – Ø2.95 X Ø23.47		
	135868	O-RING – Ø1.78 X Ø18.77		
9	17006	O-RING – 3.18 X 25.40	1	
10	40704	FASTENER – CABLE TIE, ORANGE	1	
11	40703	FASTENER – CABLE TIE, BLUE	1	
12	40702	FASTENER – CABLE TIE, RED	1	
13	21763	FASTENER – CABLE TIE, BLACK	1	
A	21061	SCREW – SET HEX SOC 1/4-20 X 1/2 GR5 AF0C	1	

659. The kit includes spacer coil (NSS), dust cap (NSS), coil nut (NSS), and set screw (MD #21061).
660. If replacement parts are needed for discontinued seal kit (MD #328281) or discontinued relief valves (MD #322159 and MD #328282), order new integrated pump (MD #337774). For integrated pump service parts, refer to Section *160 Integrated Pump – Service Parts (Integrated Hydraulic System), page 395*.
661. Connects to ports M1 and M2.
662. Connects to port SDP.
663. Connects to port KP.
664. Connects to port SDR.

160 Integrated Pump – Service Parts (Integrated Hydraulic System)

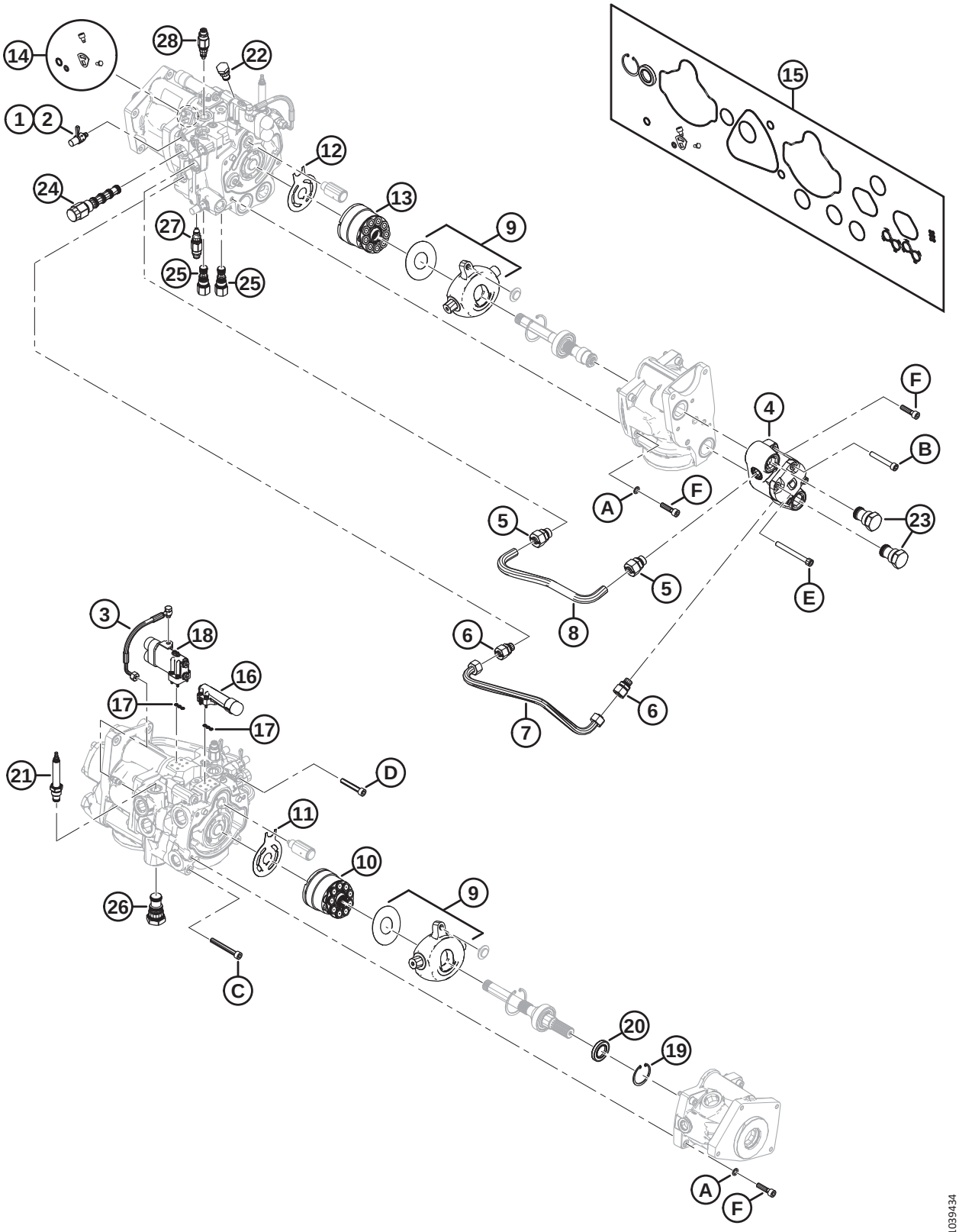

NOTE:

All illustrated parts that are **NOT** in the parts list are non-serviced parts, illustrated for reference only.

Ref	Part Number	Description	Qty	Serial Number
	337774	PUMP – INTEGRATED [665]		
1	136900	CAP – DUST	3	
2	134437	FITTING – COUPLING HYD-TEST PORT	3	
3	276790	KIT – LS HOSE AND HARDWARE	1	
4	328288	KIT – 15CC GEAR PUMP W/ HARDWARE	1	
5	328292	FITTING – ADAPTER (18 MM) [666]	2	
6	328293	FITTING – ADAPTER (15 MM) [667]	2	
7	328291	LINE – REVERSE [668]	1	
8	328290	LINE – FORWARD [668]	1	
9	337441	KIT – SWASHPLATE REBUILD	2	
10	328313	KIT – 45CC ROTATING GROUP	1	
11	328312	PLATE – VALVE	1	
12	328311	PLATE – VALVE	1	
13	328310	KIT – 38CC ROTATING GROUP	1	
14	337440	KIT – KNIFE PUMP CAM SEAL	1	
15	328309	KIT – PUMP SEAL	1	
16	328306	KIT – KNIFE DRIVE COMPENSATOR [669]	1	
	357937	CAP – DUST	1	
17	328308	KIT – COMPENSATOR SEALS (LOAD SENSE)	2	
18	328307	KIT – SIDE DRAPER COMPENSATOR [670]	1	
	357937	CAP – DUST	2	
19	328178	RING – RETAINING INTERNAL	1	
20	322142	SEAL – SHAFT	1	
21	328261	VALVE – FLOW CONTROL (MV) [671]	1	
	252351	SEAL KIT		
22	123318	VALVE – CHECK (CV6) [672]	1	
	322148	SEAL KIT		
23	322161	VALVE – CHECK (CV1, CV2) [673]	2	
	328283	SEAL KIT		
24	322160	VALVE – PO 3WAY (DH) [674]	1	
	328269	SEAL KIT		

665. Refer to Section *159 Pump Assembly (Integrated Hydraulic System), page 393*.
666. 18 mm diameter; fitting does not include a captive nut.
667. 15 mm diameter; fitting does not include a captive nut.
668. Reverse and forward lines include captive nuts at each end.
669. The kit includes one compensator (NSS), four M5 bolts (NSS), and one dust cap (MD #357937).
670. The kit includes one compensator (NSS), four M5 bolts (NSS), and two dust caps (MD #357937).
671. Connects to port MV.
672. Connects to port CV6.
673. Connects to ports CV1 and CV2.
674. Connects to port DH.

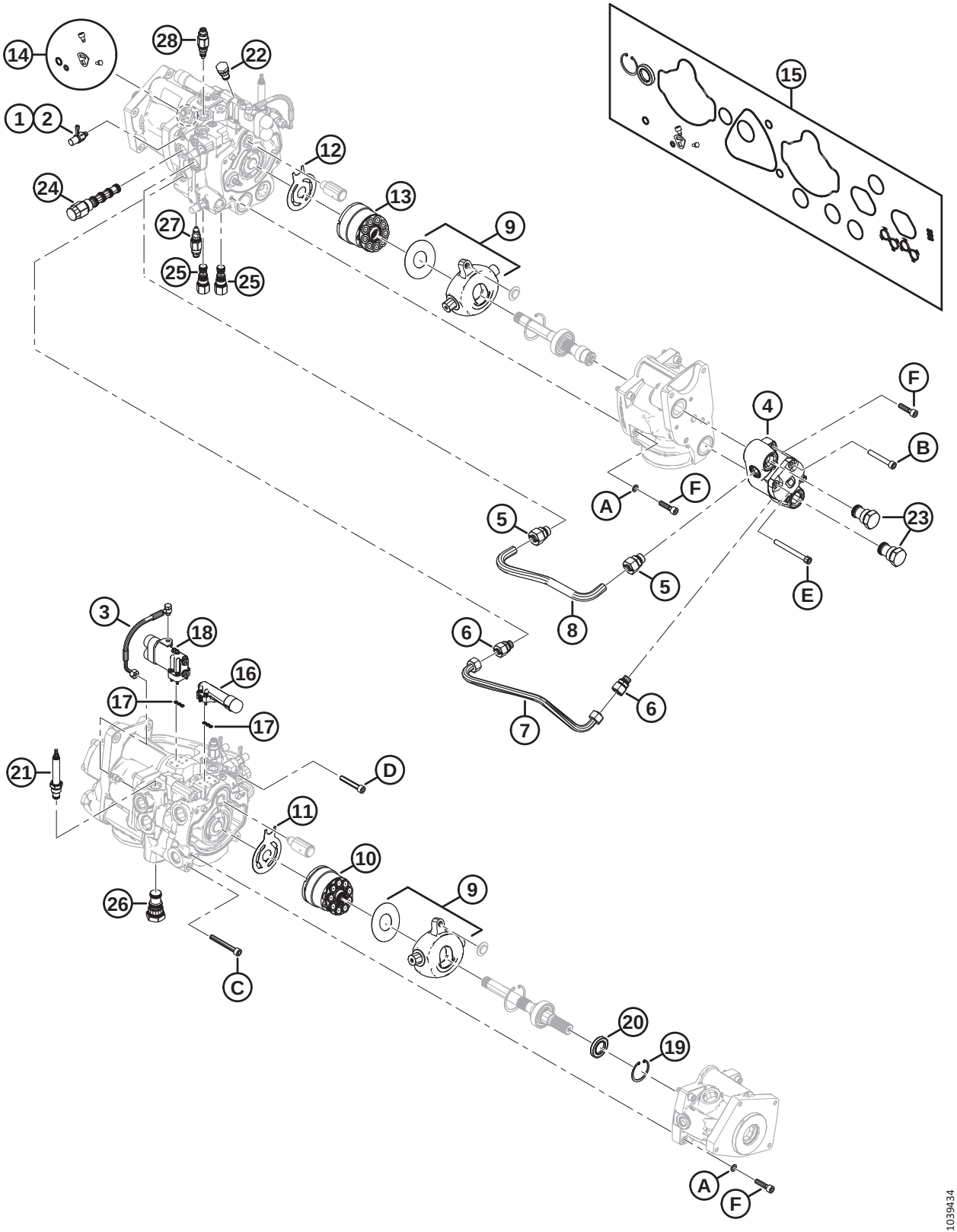
14
28
22
1
2
12
24
13
9
27
25
25
15
F
4
B
A
F
5
23
5
E
8
3
18
6
16
17
17
6
7
21
D
11
10
9
26
C
20
19
A
F
1039434

Ref	Part Number	Description	Qty	Serial Number
25	322158	VALVE – PO LOGIC -10 (LE1, LE2) [675]	2	
	322148	SEAL KIT		
26	322157	VALVE – PO LOGIC ELEMENT-16 (LE3) [676]	1	
	322149	SEAL KIT		
27	337773	VALVE – RELIEF (RV2) [677]	1	
	337823	SEAL KIT		
28	337770	VALVE – RELIEF (RV1) [678]	1	
	337823	SEAL KIT		
	328262	KIT – MANUAL OVERRIDE [665]	1	
A	337433	WASHER – M10 SPECIAL		
B	337427	BOLT – SOC HD M10 X 70GR12.9		
C	337431	BOLT – SOC HD M10 X 80GR12.9		
D	337432	BOLT – SOC HD M10 X 60GR12.9		
E	337429	BOLT – SOC HD M10 X 100 GR12.9		
F	337430	BOLT – SOC HD M10 X 40GR12.9		

675. Connects to ports LE1 and LE2.
676. Connects to port LE3.
677. Connects to port RV2.
678. Connects to port RV1.

161 Pump, Gearbox, and Input Drive (Modular Hydraulic System)

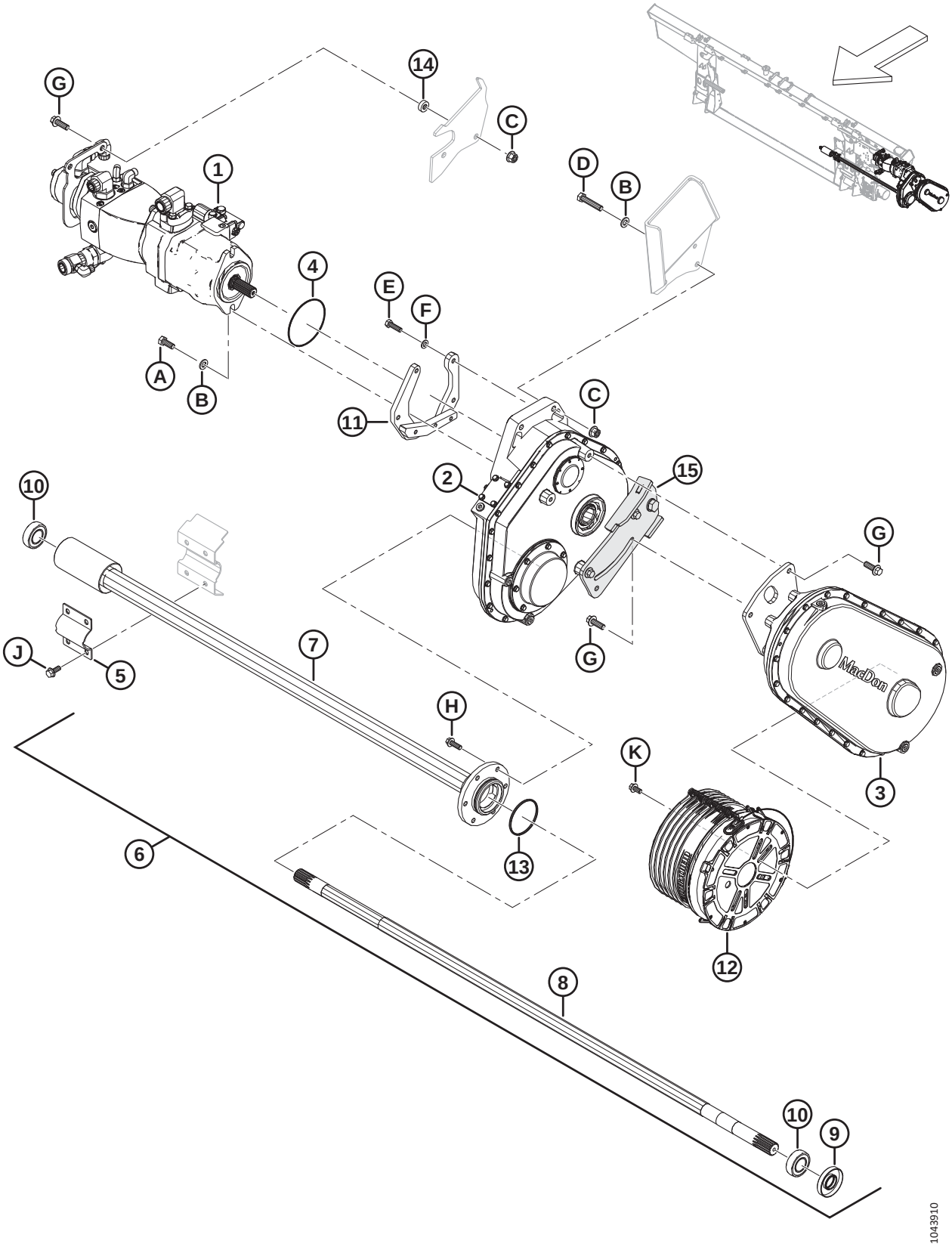

Ref	Part Number	Description	Qty	Serial Number
1	REF	ASSY – PUMP AND GEAR (MODULAR HYDRAULIC SYSTEM) [679]	1	
2	368761	DRIVE – FLOAT MODULE MAIN [680]	1	
3	308726	DRIVE – INPUT (CNH) [681]	1	
	337713	DRIVE – INPUT (JD) [682]	1	
	347001	DRIVE – INPUT (CLAAS) [683]	1	
	308863	DRIVE – INPUT (AGCO) [684]	1	
4	328713	O-RING – 2.62 X 113.97	1	
5	347185	CLAMP – AUGER PIVOT	1	
6	308732	ASSEMBLY – FEED AUGER SHAFT [685]	1	
7	328370	TUBE – OUTPUT	1	
8	308740	SHAFT – OUTPUT	1	
9	308755	SEAL – SHAFT	1	
10	21363	BEARING – SPH OD AND COLLAR C/W 2 SEALS	2	
11	368669	SUPPORT – PUMP, WELDT	1	
12	322561	GUARD – COUNTER CONE 250 MM	1	
13	252462	O-RING – 3.18 X 82.55	1	
14	323998	TUBE – SPACER	1	
15	REF	SUPPORT – WELDT BRACE (MODULAR HYDRAULIC SYSTEM) [686]	1	
A	30630	BOLT – HEX HD TFL M12 X 1.75 X 30-8.8-A3L		
B	184714	WASHER – FLAT REG M12-300HV		
C	136431	NUT – HEX FLG CTR LOC M12 X 1.75-10		
D	320559	BOLT – HEX HD M12 X 1.75 X 60-10.9-ZINC		
E	30628	BOLT – HEX HD M10 X 1.5 X 35-8.8-AA1J		
F	184711	WASHER – FLAT REG M10-200HV-AA1J		
G	152731	BOLT – HEX FLG HD TFL M12 X 1.75 X 35-10.9-AA1J		
H	184665	BOLT – HEX FLG HD M10 X 1.5 X 30-10.9-AA1J		
J	135783	BOLT – HEX FLG HD TFL M10 X 1.5 X 25-10.9-AA1J		
K	152655	BOLT – HEX FLG HD M10 X 1.5 X 20-8.8-AA1J		

679. For pump assembly, refer to Section *162 Pump Assembly (Modular Hydraulic System), page 401*.
680. For gearbox assembly, refer to Section *164 Gearbox Assembly, page 407*.
681. Used with Case and New Holland combines. For input drive assembly, refer to Section *165 Input Drive Assembly, page 411*.
682. Used with John Deere combines. For input drive assembly, refer to Section *165 Input Drive Assembly, page 411*.
683. Used with CLAAS combines. For input drive assembly, refer to Section *165 Input Drive Assembly, page 411*.
684. Used with Challenger®, Gleaner®, IDEAL™, and Massey Ferguson® combines. For input drive assembly, refer to Section *165 Input Drive Assembly, page 411*.
685. The feed auger shaft assembly includes shaft seal (MD #308755), collar bearing (MD #21363), output tube (MD #328370), output shaft (MD #328202), insert bearing (MD #328371), O-ring (MD #252462), and two set screws (MD #320418).
686. For gearbox brace, refer to Section *163 Gearbox Brace (Modular Hydraulic System), page 405*.

162 Pump Assembly (Modular Hydraulic System)

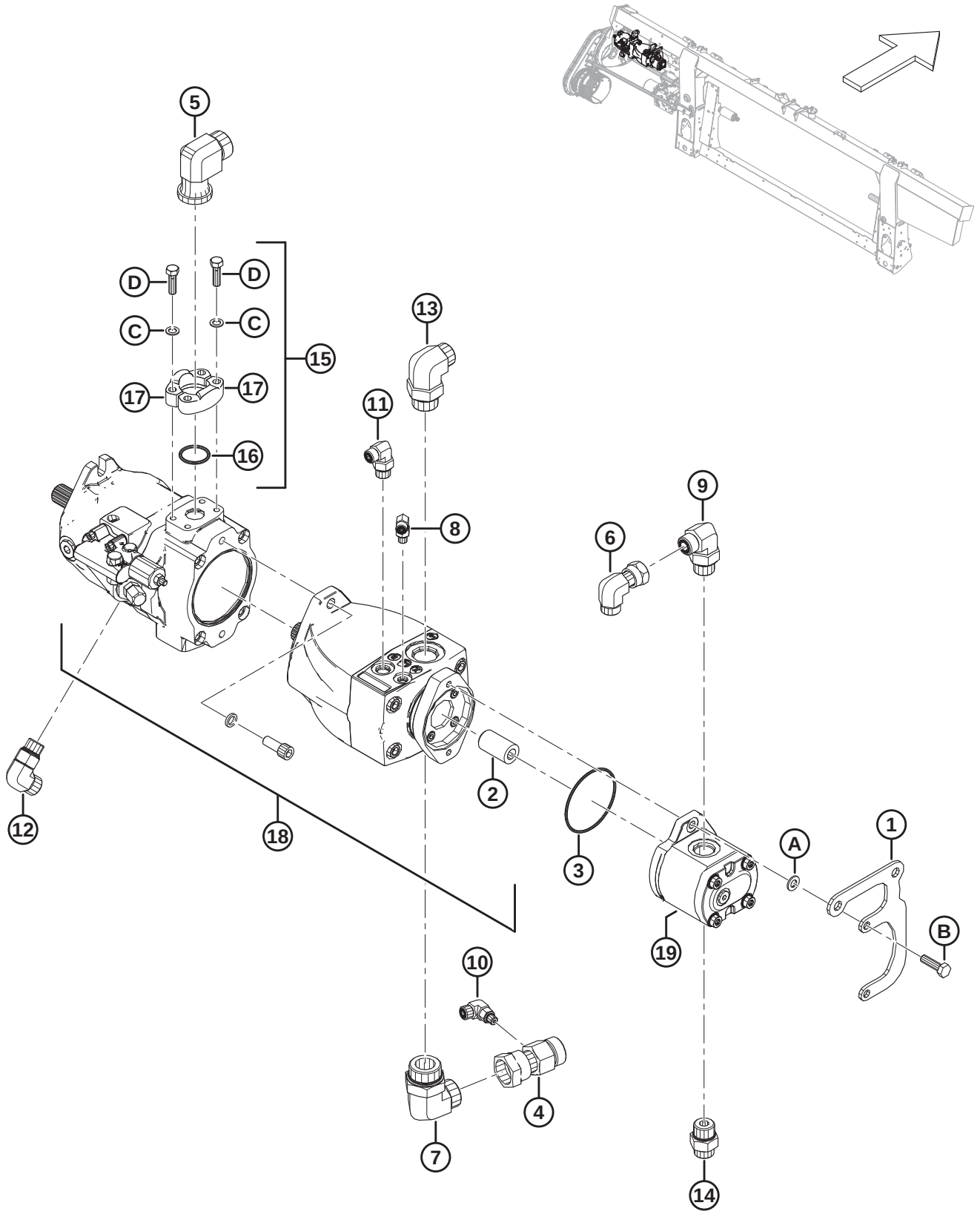

Ref	Part Number	Description	Qty	Serial Number
1	378248	BRACKET – TAIL SUPPORT	1	
2	295140	COUPLER – SPLINED, 20-11T [687]	1	
3	136024	O-RING – 3.00 X 85.00	1	
4	252554	FITTING – TEE HYD, GAUGE PORT	1	
	135868	O-RING – 1.78 X 18.77		
5	252208	FITTING – 90° 16-16 CODE61-ORFS	1	
	112868	O-RING – 3.53 X 32.92		
	135554	O-RING – 1.78 X 23.52		
6	136846	FITTING – ELBOW 90° HYD	1	
	135867	O-RING – 1.78 X 15.60		
7	136766	FITTING – ELBOW 90° HYD	1	
	50222	O-RING – 3.00 X 37.47		
	135554	O-RING – 1.78 X 23.52		
8	136447	FITTING – ELBOW 90° HYD	1	
	50223	O-RING – 1.83 X 8.92		
	135957	O-RING – 1.78 X 7.65		
9	136347	FITTING – ELBOW 90° HYD	1	
	135867	O-RING – 1.78 X 15.60		
	30971	O-RING – 2.95 X 23.47		
10	136337	FITTING – ELBOW 90° HYD	1	
	50223	O-RING – 1.83 X 8.92		
	135865	O-RING – 1.78 X 9.25		
11	136149	FITTING – ELBOW 90°HYD	1	
	44209	O-RING – 2.21 X 16.36		
	135865	O-RING – 1.78 X 9.25		
12	136089	FITTING – ELBOW 90° HYD	1	
	44210	O-RING – 2.46 X 19.18		
	135867	O-RING – 1.78 X 15.60		
13	135901	FITTING – ELBOW 90° HYD	1	
	50220	O-RING – 2.95 X 29.74		
	135868	O-RING – 1.78 X 18.77		
14	135786	FITTING – ADAPTER	1	
	30971	O-RING – 2.95 X 23.47		
	135867	O-RING – 1.78 X 15.60		
15	112866	KIT – SPLIT FLANGE, 1 INCH CD 61 [688]	1	
16	112868	O-RING – 3.53 X 32.92	1	
17	194033	FLANGE – HALF SPLIT 1 INCH-CODE 61	2	
18	NSS	ASSY – PUMPS DRAPER KNIFE [689]	1	
19	187252	GEAR PUMP – 16 CC	1	
	187967	SEAL KIT		

687. Service part only for draper drive pump (NSS).
688. The kit includes two half-split flanges (MD #194033), O-ring (MD #112868), four bolts (MD #252640), and four flat washers (MD #30191).
689. Not sold separately; includes two piston pumps and coupler (MD #295140).

PUMP ASSEMBLY (MODULAR HYDRAULIC SYSTEM)

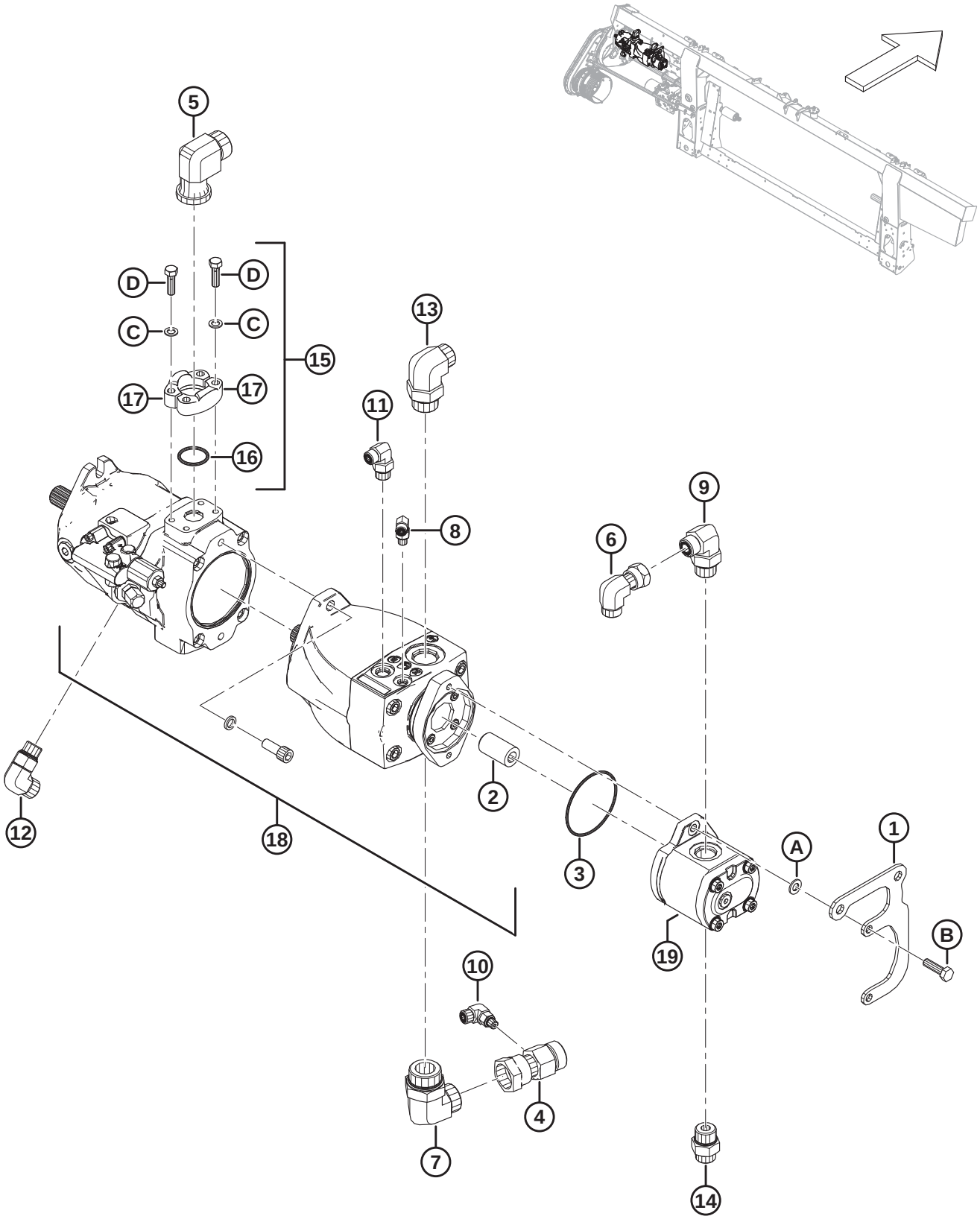

Ref	Part Number	Description	Qty	Serial Number
A	**184711**	**WASHER – FLAT REG M10-200HV-AA1J**		
B	**30628**	**BOLT – HEX HD M10 X 1.5 X 35-8.8-AA1J**		
C	**252640**	**BOLT – HEX HD 3/8-16 X 1.25-GR 8-AA3L**		
D	**30191**	**WASHER – HARDENED ASTM F436 3/8**		

163 Gearbox Brace (Modular Hydraulic System)

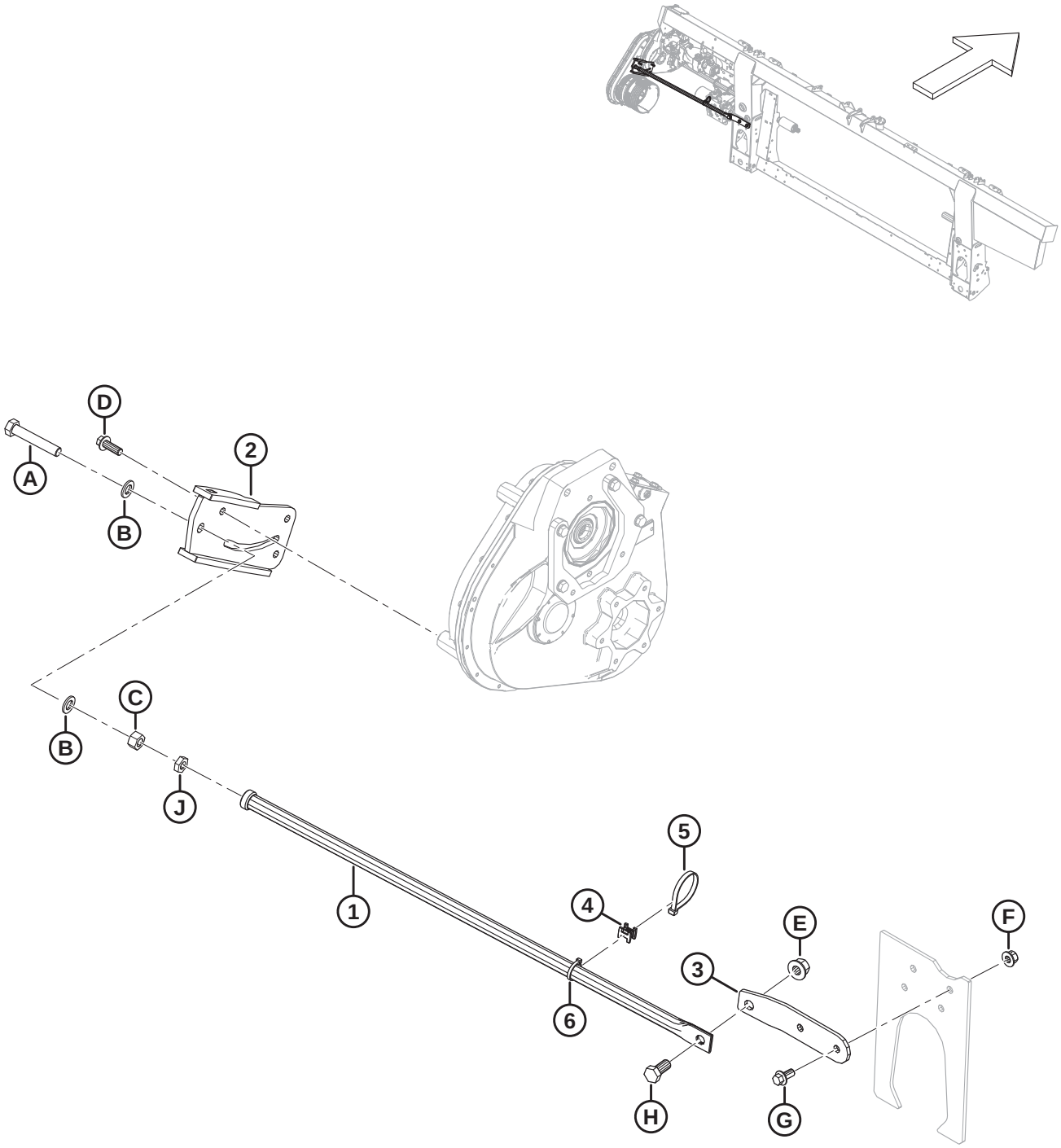

1043929

GEARBOX BRACE (MODULAR HYDRAULIC SYSTEM)

NOTE:

This brace is used only for float modules with a modular hydraulic system.

Ref	Part Number	Description	Qty	Serial Number
1	**378236**	**SUPPORT – INPUT DRIVE, WELD'T**	**1**	
2	**368843**	**SUPPORT – BRACE**	**1**	
3	**368845**	**BRACKET – BRACE**	**1**	
4	**134442**	**SPACER – DUAL SWIVEL SADDLE**	**1**	
5	**30753**	**FASTENER – CABLE TIE, BLACK, 305 MM**	**1**	
6	**21763**	**FASTENER – CABLE TIE, BLACK, 160 MM**	**1**	
A	**252533**	**BOLT – HEX HD TFL M16 X 2 X 90-10.9-AA3L**		
B	**184717**	**WASHER – FLAT REG M16-200HV-AA1J**		
C	**184699**	**NUT – HEX M16 X 2-8-AA1J**		
D	**152731**	**BOLT – HEX FLG HD TFL M12 X 1.75 X 35-10.9-ZINC**		
E	**136440**	**NUT – HEX FLG CTR LK M16 X 2-10-AA1J**		
F	**136431**	**NUT – HEX FLG CTR LOC M12 X 1.75-10**		
G	**136399**	**BOLT – HEX FLG HD TFL M12 X 1.75 X 25-8.8-AA1J**		
H	**136137**	**BOLT – HEX HD TFL M16 X 2 X 35-8.8-AA1J**		
J	**136473**	**NUT – HEX THIN M16 X 2-05-AA1J**		

164 Gearbox Assembly

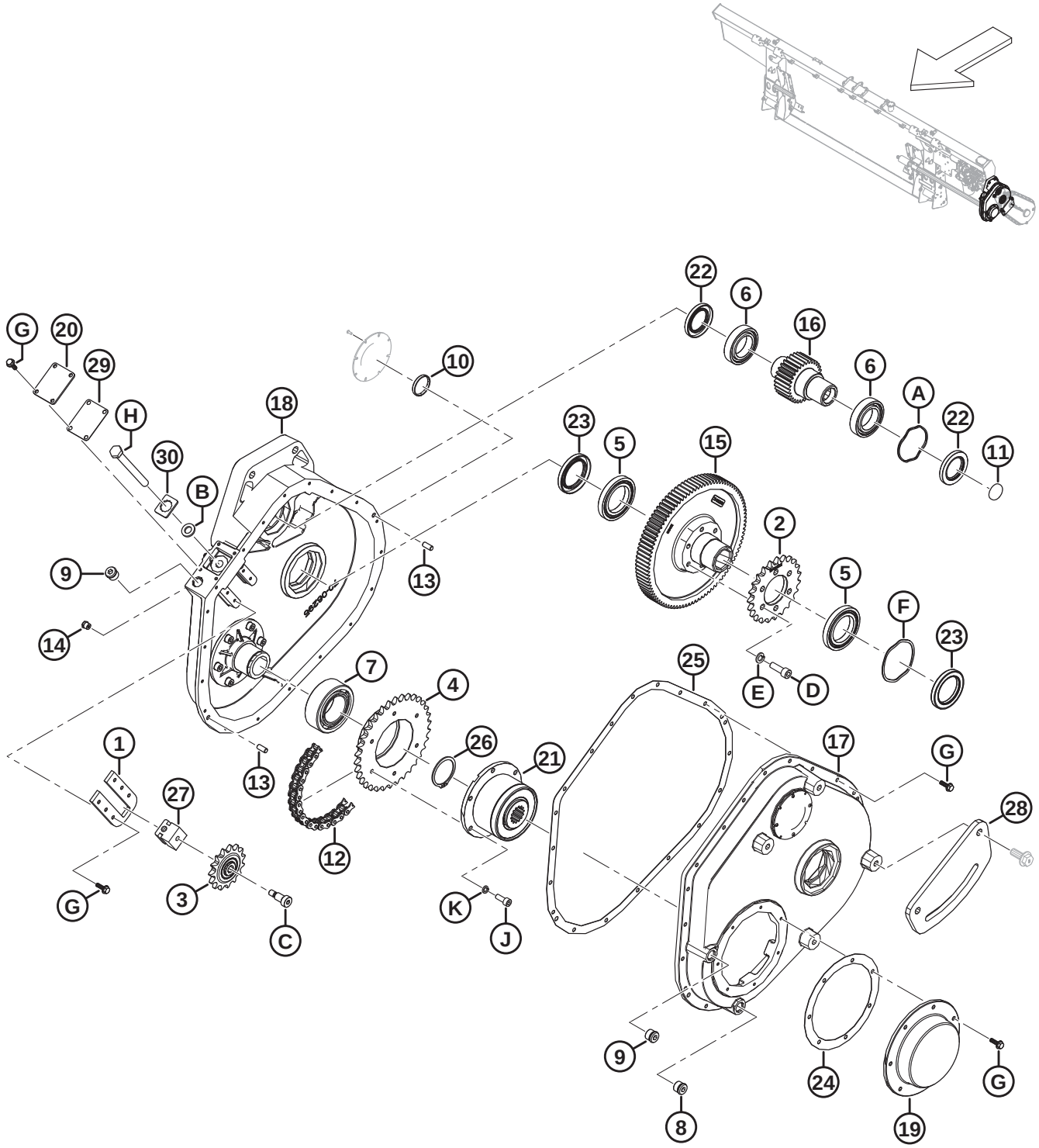

1043556

GEARBOX ASSEMBLY

Ref	Part Number	Description	Qty	Serial Number
	308725	DRIVE – FLOAT MODULE MAIN **(INTEGRATED HYDRAULIC SYSTEM)** [690]		
	347405	KIT – GEARBOX UPDATE **(INTEGRATED HYDRAULIC SYSTEM)** [691]	A/R	
	368761	**DRIVE – FLOAT MODULE MAIN (MODULAR HYDRAULIC SYSTEM)** [692]		
1	328181	PLATE – TENSIONER	1	
2	322409	SPROCKET – 50A23	1	
3	328188	SPROCKET – 50B15 C/W BEARING	1	
4	328187	SPROCKET – 50B34	1	
5	322193	BEARING – BALL	2	
6	322192	BEARING – BALL	2	
7	322197	BEARING – DOUBLE ROW BALL	1	
8	328154	PLUG – M18 ORB MAGNETIC	1	
9	328152	PLUG – M18 ORB	1	
10	328186	PLUG	1	
11	328185	PLUG	1	
12	301971	CHAIN – ROLLER, RC-50-56P ENDLESS	1	
13	NSS	PIN – DOWEL	2	
14	328176	BREATHER – 1/8-27 NPT	1	
15	328175	GEAR – 94 TEETH	1	
16	328174	GEAR – 30 TEETH	1	
17	NSS	HOUSING – GEARBOX	1	
18	NSS	HOUSING – GEARBOX	1	
19	328164	COVER – CLUTCH	1	
20	328165	COVER – TENSIONER	1	
21	314082	CLUTCH – WEASLER	1	
22	347416	SEAL – VITON 38 X 62 X 7	2	
23	347417	SEAL – VITON 48 X 72 X 8	2	
24	328161	GASKET – CLUTCH COVER	1	
25	347410	GASKET – FM200 MAIN GEARBOX	1	
26	322195	RING – RETAINING	1	
27	328157	BLOCK – IDLER	1	
28	347349	BRACKET – MAIN CMPLTN JOINT **(INTEGRATED HYDRAULIC SYSTEM ONLY)** [693]	1	
29	328162	GASKET – TENSIONER	1	
30	368863	PLATE – GEARBOX BOLT	1	
A	328160	WASHER – WAVE SPRING		
B	184587	WASHER – FLAT 1/2 X 1.25 AA1J		

690. Service part only for float modules with an integrated hydraulic system.
691. The gearbox update kit is used to update model year 2020 gearboxes. The kit includes spacers (MD #347408, MD #347409), gasket (MD #347410), two seals (MD #347416), two seals (MD #347417), wave spring washers (MD #328159, MD #328160), gears (MD #328174, MD #328175), ball bearings (MD #322192, MD #322193), sprocket (MD #322409), screws (MD #135401), washers (MD #30632), and instructions.
692. Service part only for float modules with a modular hydraulic system.
693. This bracket is used only for float modules with an integrated hydraulic system.

GEARBOX ASSEMBLY

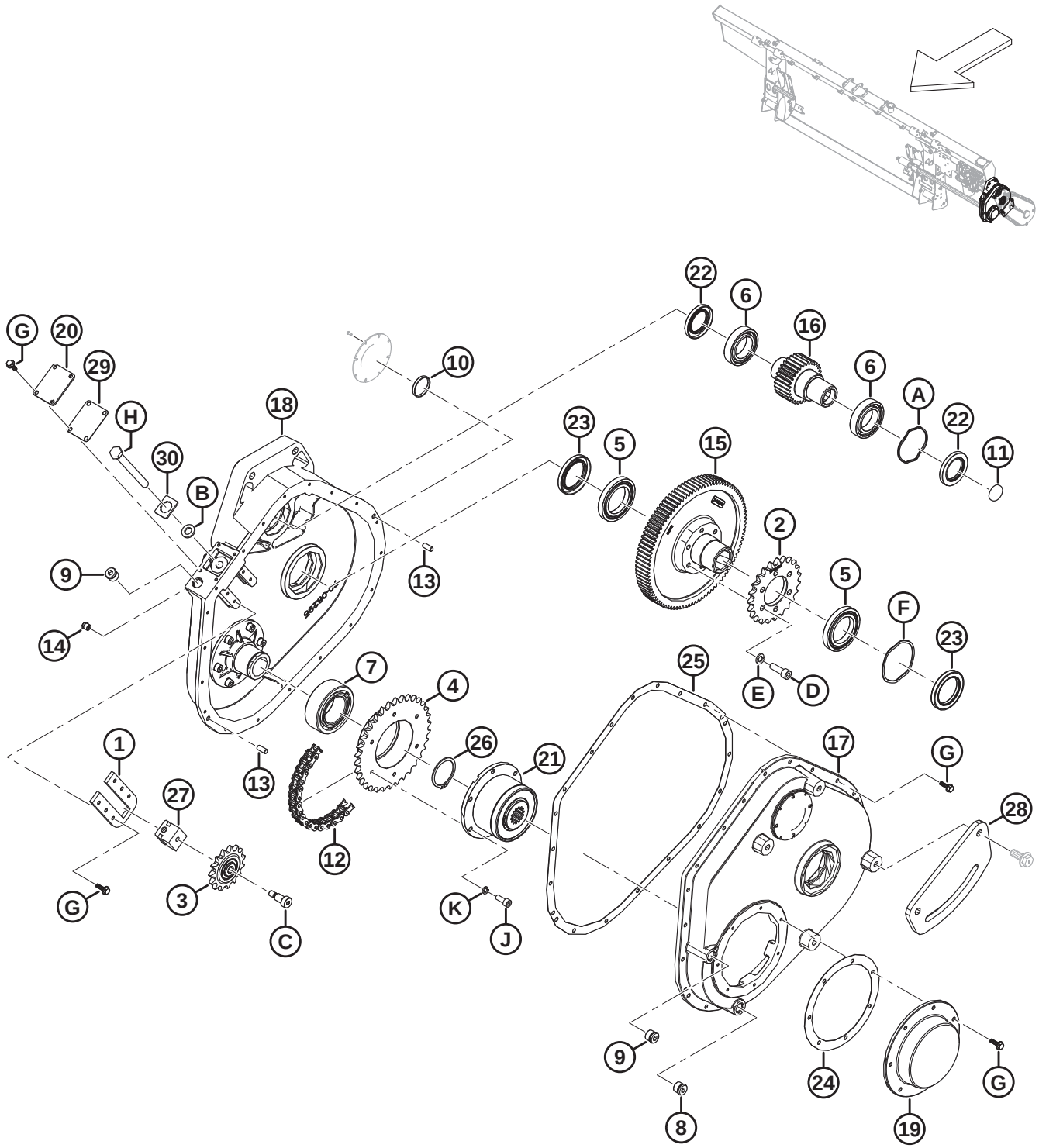

GEARBOX ASSEMBLY

Ref	Part Number	Description	Qty	Serial Number
C	328184	BOLT – SHOULDER 3/8-16 X 3/4 LG		
D	347978	SCREW – CAP M10 X 1.5 X 30		
	135401	SCREW – HEX SOC HD TFL M10 X 1.5 X 30-8.8-AA1J [694]		
E	347975	WASHER – LOCK M10 CAP SCREW		
	30632	WASHER – LOCK SPRING M10 [694]		
F	328159	WASHER – WAVE SPRING		
G	328156	BOLT – SERRATED FLANGE		
H	328158	BOLT – TENSIONER		
J	347977	SCREW – CAP M8 X 1 X 20		
K	347976	WASHER – LOCK M8 CAP SCREW		

694. For machines serviced with gearbox update kit (MD #347405).

165 Input Drive Assembly

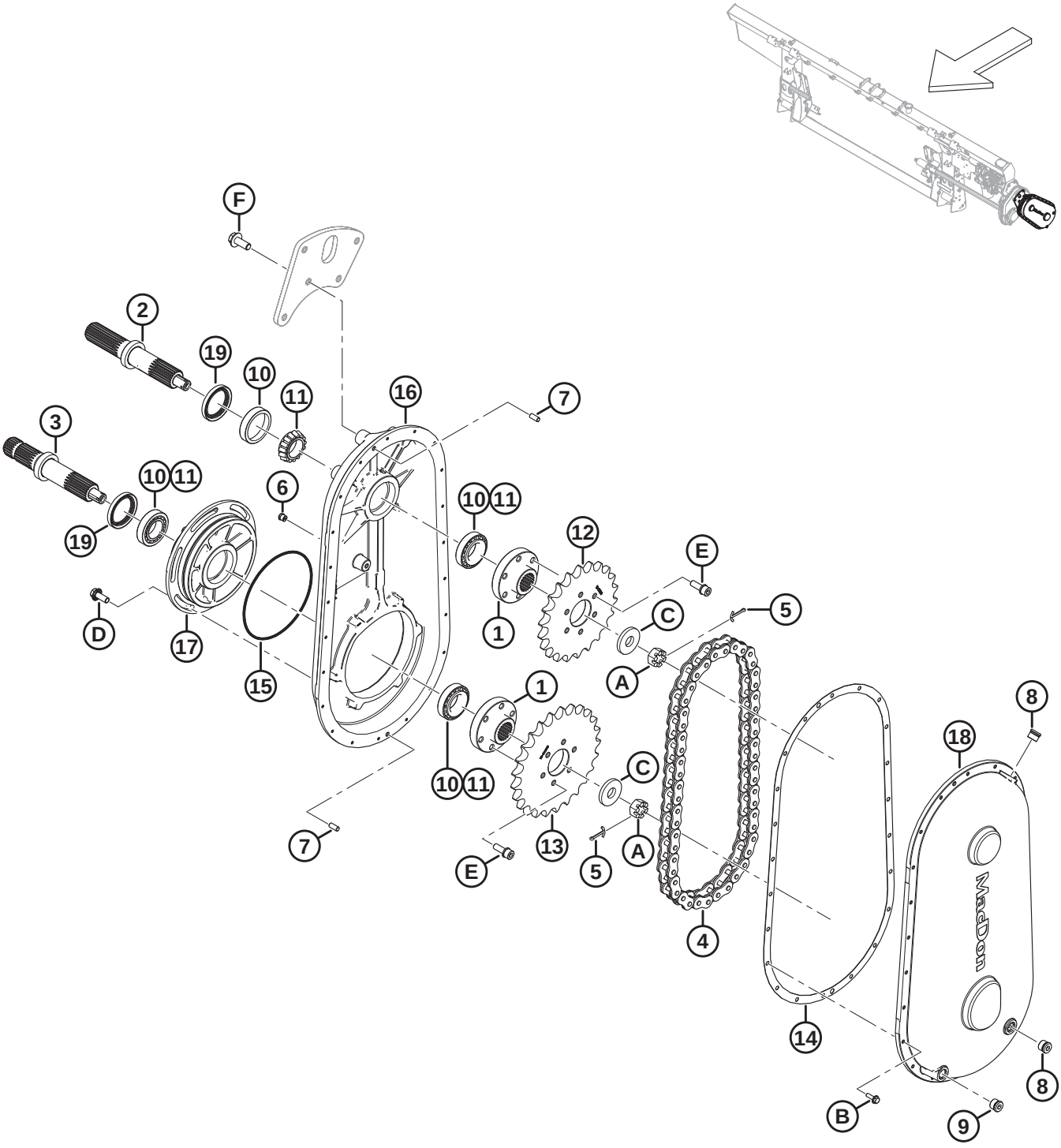

1039341

INPUT DRIVE ASSEMBLY

Ref	Part Number	Description	Qty	Serial Number
	B7041	KIT – CNH INPUT DRIVE SPROCKETS [695]		
	B7042	KIT – JD INPUT DRIVE SPROCKETS [696]		
	B7308	KIT – CLAAS INPUT DRIVE SPROCKETS [697]		
	B7111	KIT – AGCO IDEAL DRIVE INPUT SPRCKT [698]		
	308726	DRIVE – INPUT (CNH) [699]		
	337713	DRIVE – INPUT (JD) [700]		
	347001	DRIVE – INPUT (CLAAS) [701]		
	308863	DRIVE – INPUT (AGCO) [702]		
1	328203	HUB – SPLINED	2	
2	328202	SHAFT – OUTPUT	1	
3	328201	SHAFT – INPUT	1	
4	328120	CHAIN – RC80 50 PT ENDLESS	1	
5	18607	PIN – COTTER 5/32 DIA X 1.5 ZP	2	
6	328176	BREATHER – 1/8-27 NPT	1	
7	NSS	PIN – DOWEL	2	
8	328152	PLUG – M18 ORB	2	
9	328154	PLUG – M18 ORB MAGNETIC	1	
10	30701	BEARING – CUP	4	
11	30702	BEARING – CONE	4	
12	308852	SPROCKET – 80A22 (CNH) [699]	1	
	337667	SPROCKET – 80A21 (JD) [700]	1	
	308848	SPROCKET – 80A25 (CLAAS) [701]	1	
	308856	SPROCKET – 80A23 (AGCO) [702]	1	
13	308848	SPROCKET – 80A25 (CNH) [699]	1	
	308853	SPROCKET – 80A27 (JD) [700]	1	
	337667	SPROCKET – 80A21 (CLAAS) [701]	1	
	308855	SPROCKET – 80A24 (AGCO) [702]	1	
14	328200	GASKET – DRIVE	1	
15	328199	O-RING – #260	1	
16	328198	HOUSING – GEARBOX	1	
17	328197	HOUSING – ECCENTRIC	1	

695. The kit includes gasket (MD #328200), chain (MD #328120), sprockets (MD #308848, MD #308852), and instructions. Kits are available through Whole Goods only.
696. The kit includes gasket (MD #328200), chain (MD #328120), sprockets (MD #308853, MD #337667), and instructions. Kits are available through Whole Goods only.
697. The kit includes gasket (MD #328200), chain (MD #328120), sprockets (MD #308848, MD #337667), and instructions. Kits are available through Whole Goods only.
698. The kit includes gasket (MD #328200), chain (MD #328120), sprockets (MD #308855, MD #308856), and instructions. Kits are available through Whole Goods only.
699. Used with Case and New Holland combines.
700. Used with John Deere combines.
701. Used with CLAAS combines.
702. Used with Challenger®, Gleaner®, IDEAL™, and Massey Ferguson® combines.

INPUT DRIVE ASSEMBLY

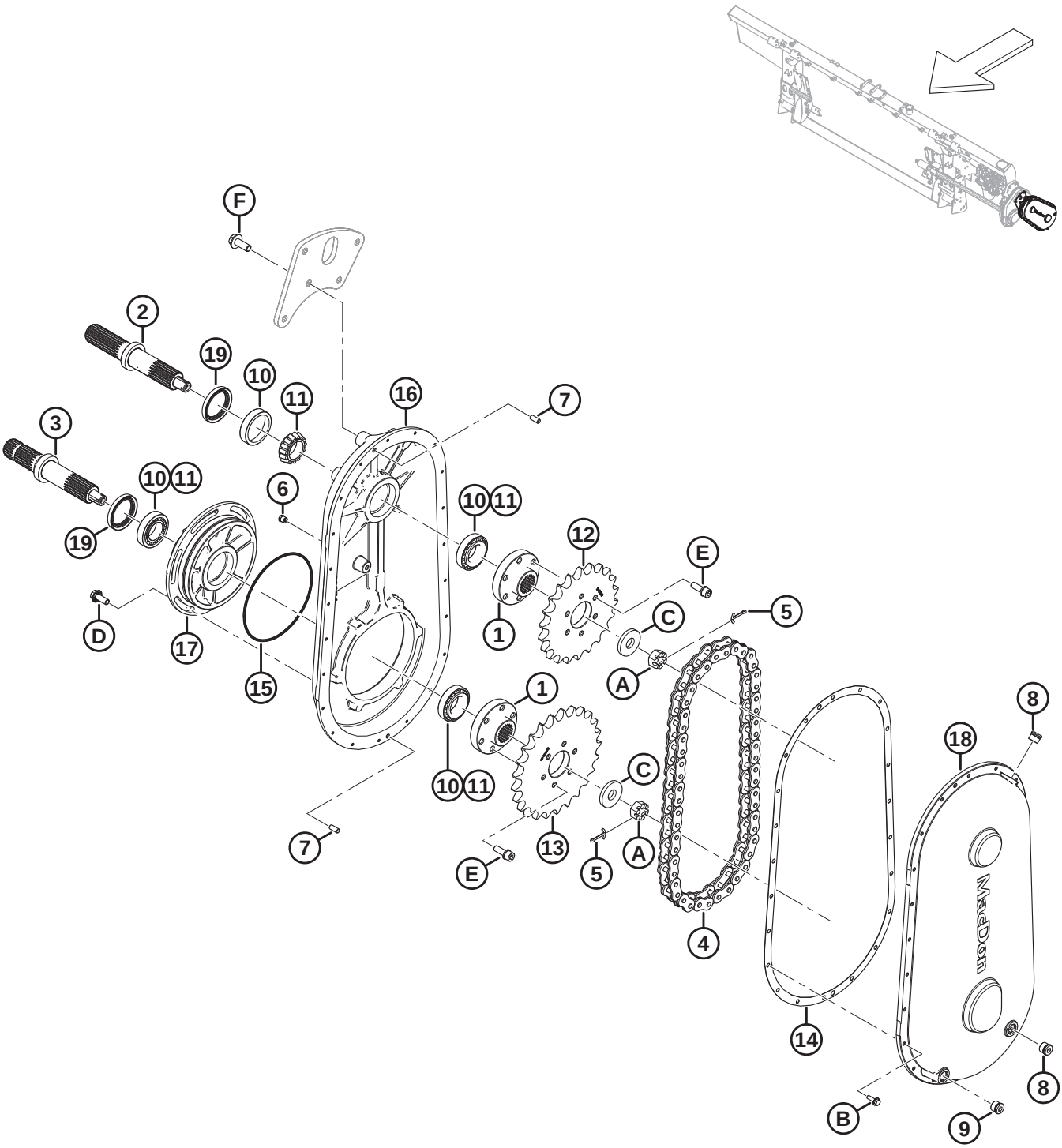

INPUT DRIVE ASSEMBLY

Ref	Part Number	Description	Qty	Serial Number
18	328196	COVER – GEARBOX	1	
19	187477	SEAL	2	
A	5512	NUT – HEX SLOTTED .750-16 UNF ZN PL		
B	328156	BOLT – SERRATED FLANGE		
C	6647	WASHER – FLAT		
D	135783	BOLT – HEX FLG HD TFL M10 X 1.5 X 25-10.9-AA1J		
E	328183	BOLT – M10 X 1.25 X 30 SEMS		
F	320180	BOLT – HEX FLG HD M12 X 1.75 X 30-SPCL-8.8-AA1J		

166 Input Driveline and Support

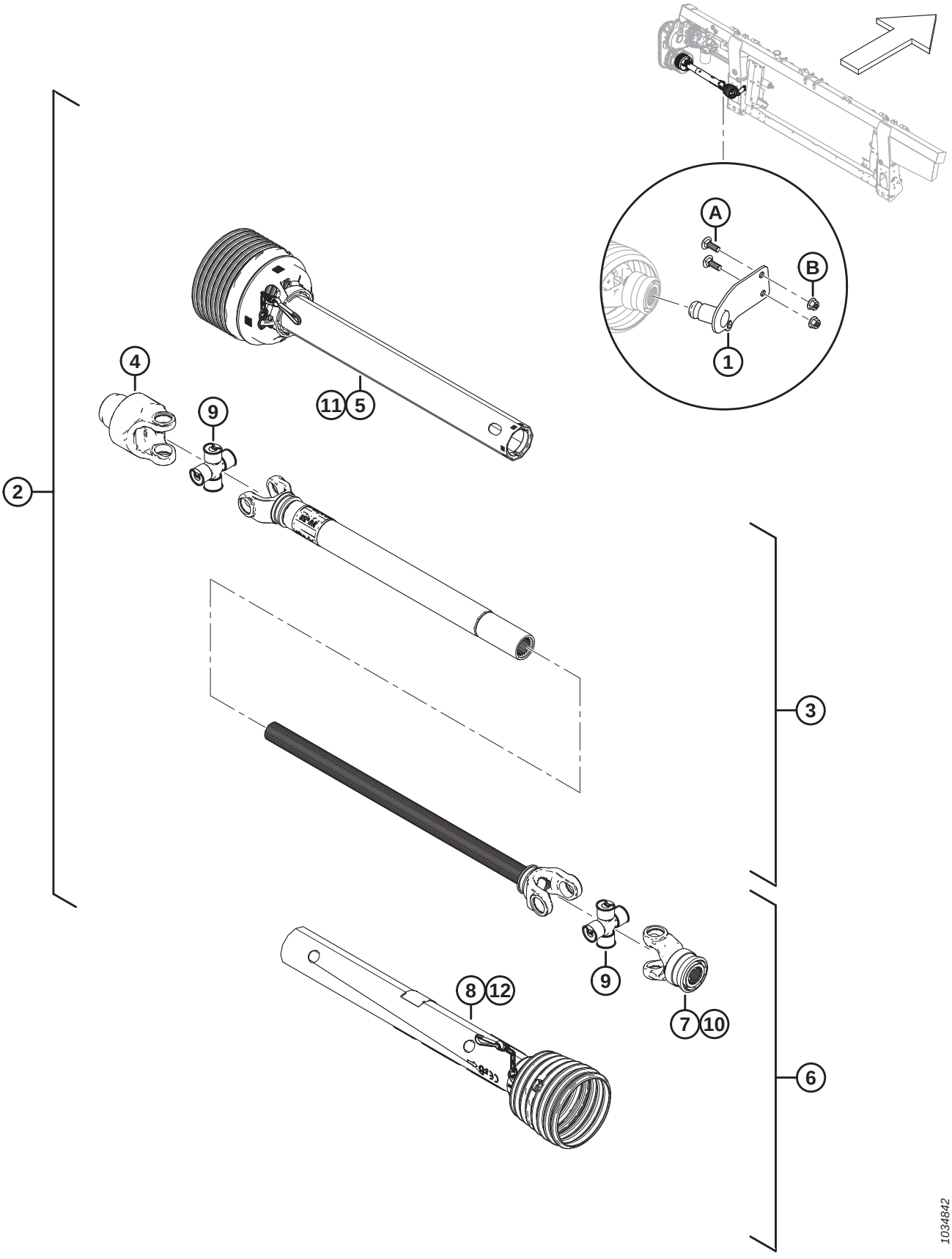

INPUT DRIVELINE AND SUPPORT

Ref	Part Number	Description	Qty	Serial Number
	B7038	KIT – 6 TOOTH SPLINE CE DRIVELINE [703]	1	
	B7039	KIT – 21 TOOTH SPLINE CE DRIVELINE [704]	1	
	B7108	KIT – 20T DRIVESHAFT BUNDLE [705]	1	
1	322486	SUPPORT WELDT – 6T PTO STORAGE [706]	1	
	322456	SUPPORT WELDT – 21T PTO STORAGE [707]	1	
	328924	SUPPORT WELDT – 20T STORAGE [708]	1	
2	314173	DRIVELINE – 6T SPLINE [709]	1	
	314174	DRIVELINE – 1.375 IN 21T SPLINE CE [710]	1	
	322114	DRIVELINE – 1 3/4 20T-SPLINE [711]	1	
3	322915	DRIVELINE – IMPLEMENT HALF	1	
4	133631	YOKE – FREE MOTION	1	
5	322916	DRIVELINE – IMPLEMENT GUARD	1	
6	322926	DRIVELINE – 6T COMBINE HALF [706]	1	
	322924	DRIVELINE – 21T COMBINE HALF [707]	1	
	322930	DRIVELINE – 20T COMBINE HALF [708]	1	
7	133634	YOKE – 6T [706]	1	
	322925	YOKE – 21T [707]	1	
	322931	YOKE – 20T [708]	1	
8	322917	DRIVELINE – COMBINE END GUARD	1	
9	142777	CROSS JOURNAL KIT	2	
10	40095	KIT – REPAIR	1	
	150891	KIT – SLIDE LOCK YOKE REPAIR [708]	1	
11	322918	INNER GUARD REPAIR KIT [712]	1	
12	220766	SHIELD REPAIR KIT CE [712]	1	
	36651	DECAL – DANGER		
	194521	DECAL – WARNING		
	30316	DECAL – DANGER		
A	184662	BOLT – RHSN TFL M10 X 1.5 X 30-8.8-AA1J		
B	135799	NUT – HEX FLG CTR LOC M10 X 1.5-10		

703. 6-tooth splined driveline kit for Case and New Holland combines. Kits are available through Whole Goods only.
704. 21-tooth splined driveline kit for Case, New Holland, John Deere, CLAAS, Challenger®, Massey Ferguson®, and Gleaner® combines. Kits are available through Whole Goods only.
705. 20-tooth splined driveline kit for IDEAL™ Series combines. Kits are available through Whole Goods only.
706. For 6-tooth spline driveline.
707. For 21-tooth spline driveline.
708. For 20-tooth spline driveline.
709. 6-tooth splined driveline kit for Case and New Holland combines.
710. 21-tooth splined driveline kit for Case, New Holland, John Deere, CLAAS, Challenger®, Massey Ferguson®, and Gleaner® combines.
711. 20-tooth splined driveline kit for IDEAL™ Series combines
712. The kit includes chain kit, bearing, lock seal, and instructions.

167 Input Driveline and Support – High Angle

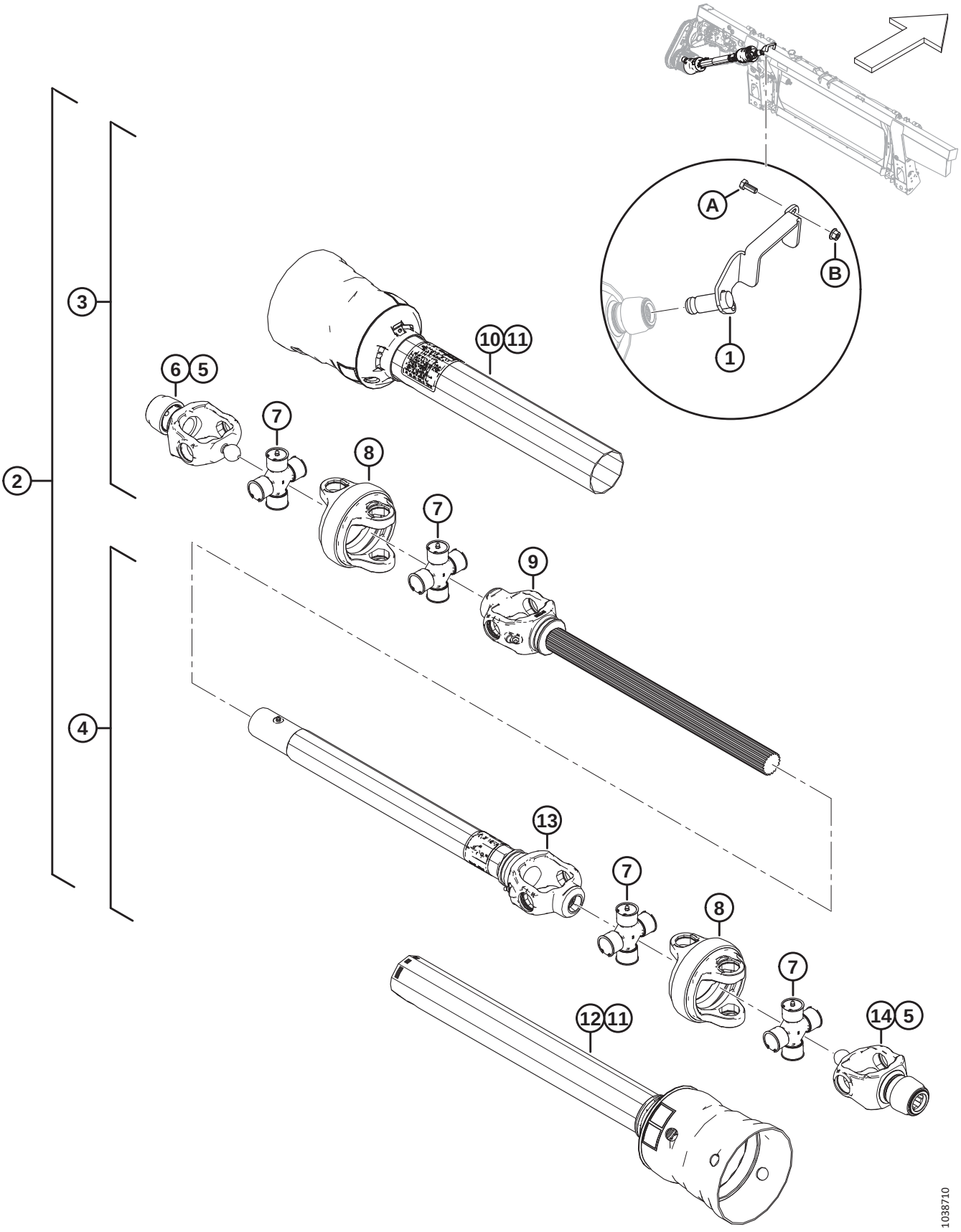

INPUT DRIVELINE AND SUPPORT – HIGH ANGLE

Ref	Part Number	Description	Qty	Serial Number
	B7180	KIT – 6T LONG HI-ANGLE DRIVESHAFT [713]		
	B7181	KIT – 21T LONG HI-ANGLE DRIVESHAFT [714]		
	B7182	KIT – 21T SHORT HI-ANGLE DRIVESHAFT [715]		
	B7326	KIT – 21T MID HI-ANGLE DRIVESHAFT [716]		
1	357064	SUPPORT WELDT – 6T PTO STORAGE [717]	1	
	357012	SUPPORT WELDT – 21T PTO STORAGE [718]	1	
2	322996	DRIVELINE – 6T HIGH ANGLE	1	
	322997	DRIVELINE – 21T HIGH ANGLE LONG	1	
	322998	DRIVELINE – 21T HIGH ANGLE SHORT	1	
3	337709	DRIVELINE – 6T SHAFT HALF, GUARDED [717]	1	
	337707	DRIVELINE – 21T SHAFT HALF, GUARDED [719]	1	
	337725	DRIVELINE – 21T SHAFT HALF, GUARDED [720]	1	
4	337723	DRIVELINE – 21T TUBE HALF, GUARDED [721]	1	
	337727	DRIVE – 21T TUBE HALF, GUARDED [722]	1	
5	133632	KIT – AUTO LOK REPAIR	2	
6	337711	YOKE – 21T CV	1	
7	337712	CROSS KIT	4	
8	337715	HOUSING CV	2	
9	337716	DRIVELINE – CV YOKE AND SHAFT [723]	1	
	337729	DRIVELINE – CV YOKE AND SHAFT [720]	1	
10	337717	DRIVELINE – OUTER GUARD [723]	1	
	337730	DRIVELINE – OUTER GUARD [720]	1	
11	337718	DRIVELINE – GUARD REPAIR KIT	2	
12	337720	DRIVELINE – INNER GUARD [721]	1	
	337731	DRIVELINE – INNER GUARD [722]	1	
13	337721	DRIVELINE – YOKE TUBE AND SLEEVE [721]	1	
	337732	DRIVELINE – YOKE TUBE AND SLEEVE [722]	1	
14	337722	6T YOKE CV [717]	1	
	337711	21T YOKE CV [718]	1	

713. Long 6-tooth splined driveline kit for Case and New Holland wide and narrow combines, Sidehill (18%) and Hillside (27%) configurations. Kits are available through Whole Goods only.
714. Long 21-tooth splined driveline kit for Case and New Holland wide and narrow combines, Sidehill (18%) and Hillside (27%) configurations; and for John Deere combines, Hillside (27%) configuration. Kits are available through Whole Goods only.
715. Short 21-tooth splined driveline kit for John Deere and CLAAS combines, Sidehill (18%) configuration. Kits are available through Whole Goods only.
716. Mid 21-tooth splined driveline kit for Case and New Holland wide and narrow combines with Everest package, and Case and New Holland Hillco Hillside Beaterless (27%) package, and John Deere Hillside (27%) package. Kits are available through Whole Goods only.
717. For long 6-tooth spline drivelines.
718. For 21-tooth spline drivelines.
719. For mid and long 21-tooth spline drivelines.
720. For short 21-tooth spline drivelines.
721. For long 6-tooth and long 21-tooth spline drivelines.
722. For short and mid 21-tooth spline drivelines.
723. For long 6-tooth, and mid and long 21-tooth spline drivelines.

INPUT DRIVELINE AND SUPPORT – HIGH ANGLE

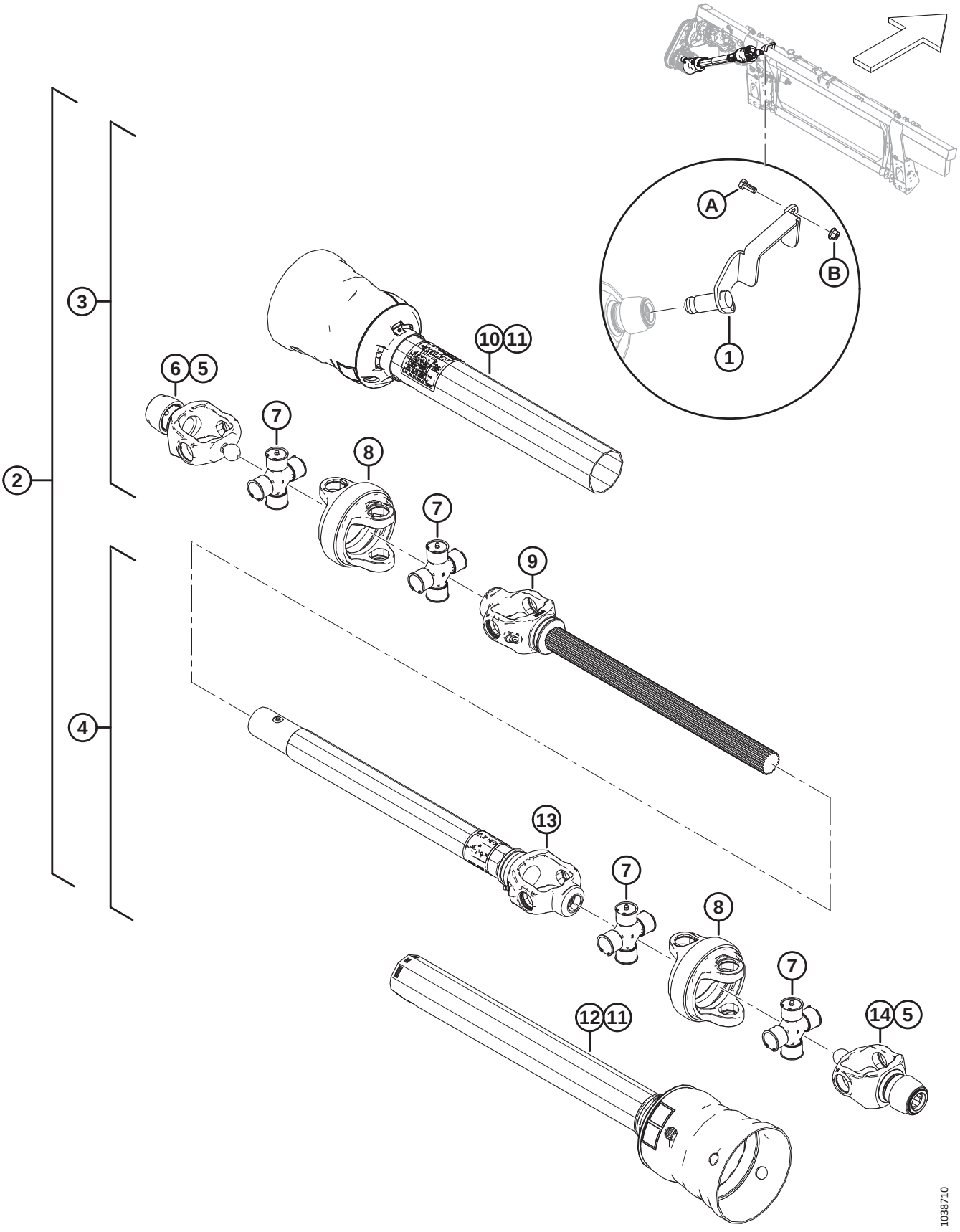

INPUT DRIVELINE AND SUPPORT – HIGH ANGLE

Ref	Part Number	Description	Qty	Serial Number
	30316	DECAL – DANGER		
	36651	DECAL – DANGER		
A	30627	BOLT – HEX HD TFL M10 X 1.5 X 25-8.8-A3L		
B	135799	NUT – HEX FLG CTR LOC M10 X 1.5-10		

168 Input Driveline Conversion Kits

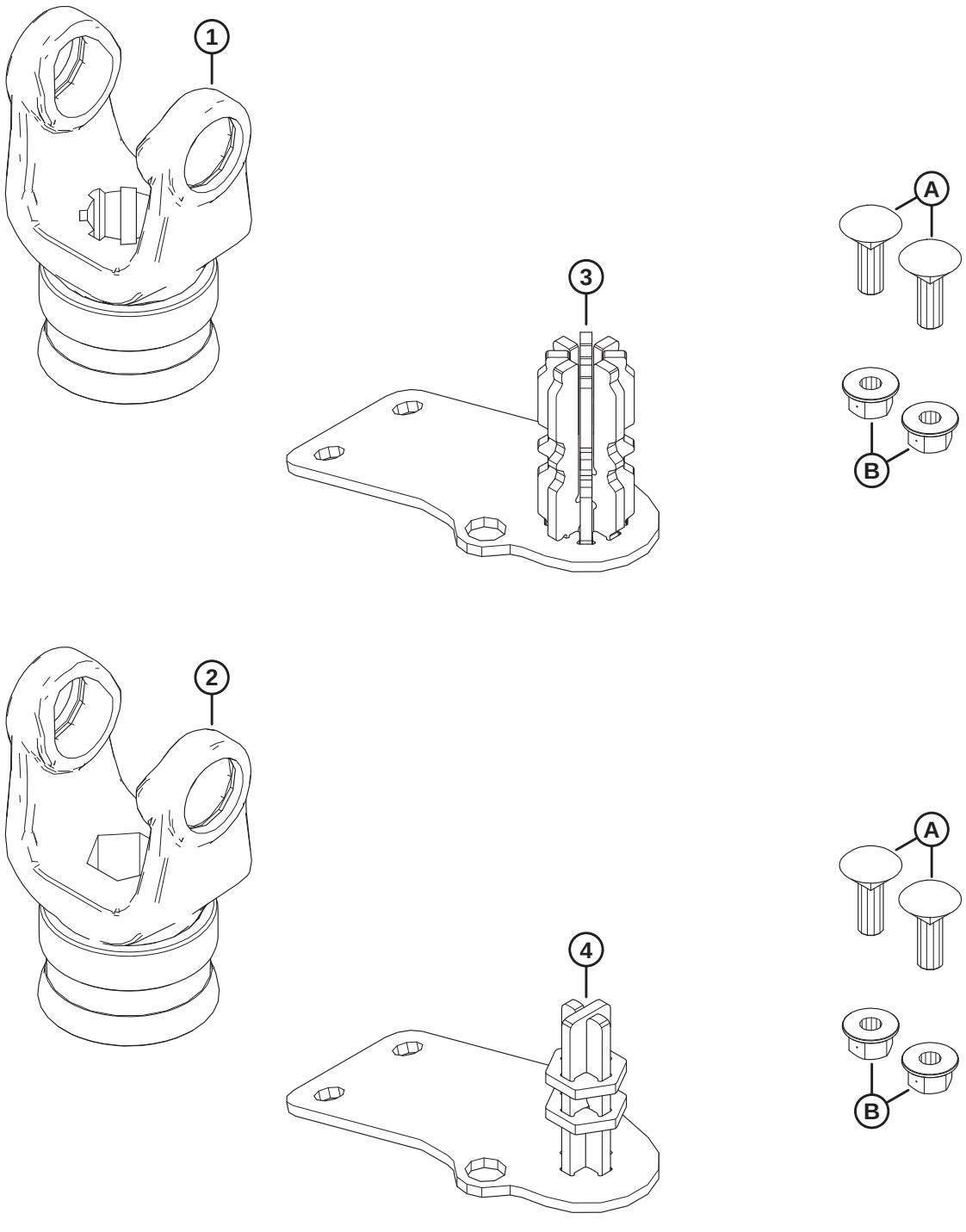

1039521

INPUT DRIVELINE CONVERSION KITS

Ref	Part Number	Description	Qty	Serial Number
	B7312	KIT – 8T DRIVESHAFT FM200 CONV [724]		
	B7317	KIT – HEX DRIVESHAFT FM200 CONV [724]		
1	314657	YOKE – 8T [725]	1	
2	133641	YOKE – HEX [726]	1	
3	337117	STORAGE WELDT – 8T [725]	1	
4	347722	STORAGE WELDT – HEX [726]	1	
A	184662	BOLT – RHSN TFL M10 X 1.5 X 30-8.8-AA1J		
B	135799	NUT – HEX FLG CTR LOC M10 X 1.5-10		

724. Kits are available through Whole Goods only.
725. Included in 8-tooth spline driveshaft conversion kit (B7312).
726. Included in hex driveshaft conversion kit (B7317).

169 Auger Drum and Internal Components

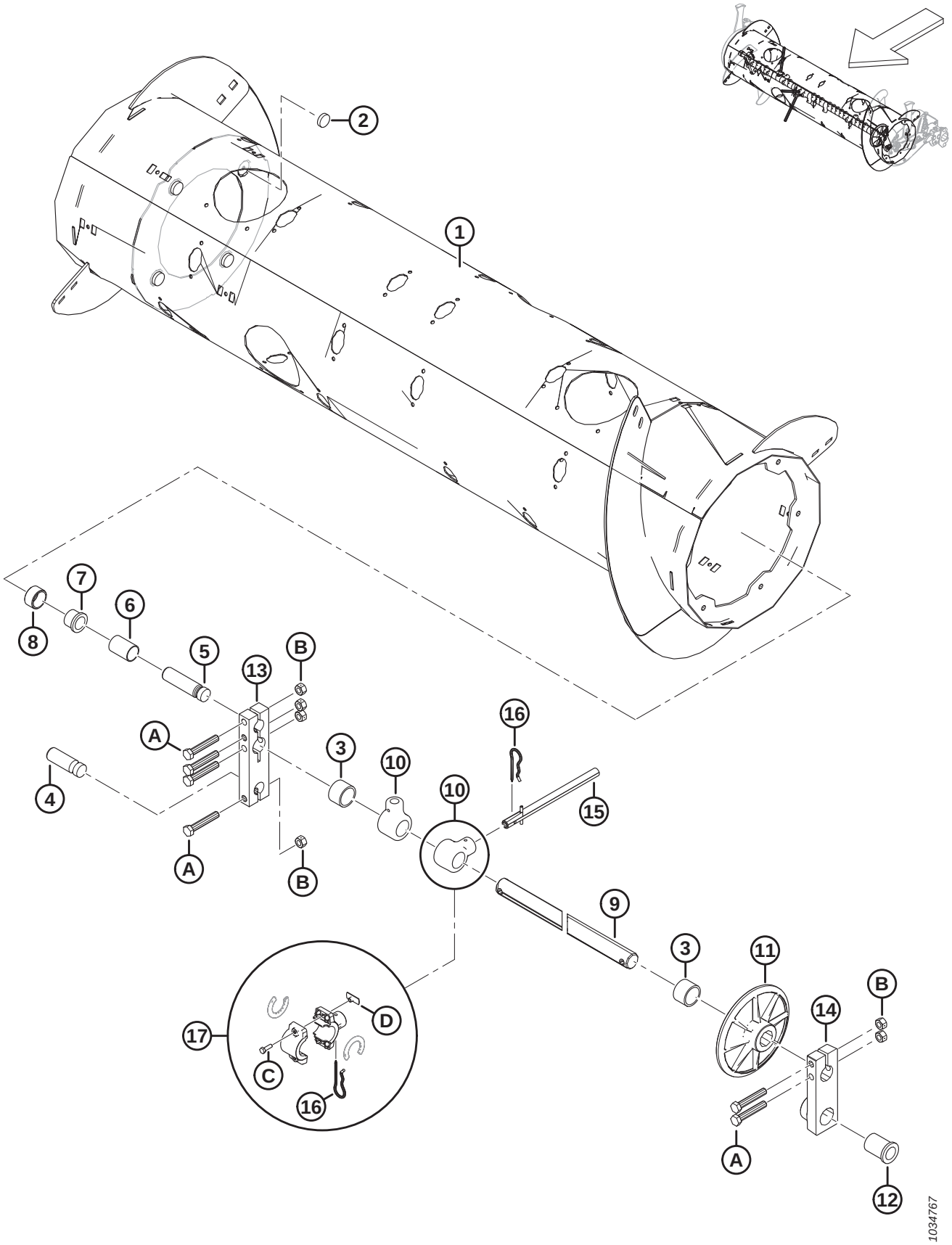

AUGER DRUM AND INTERNAL COMPONENTS

Ref	Part Number	Description	Qty	Serial Number
	322372	ASSEMBLY – FEED AUGER [727]		
1	322397	DRUM – WELDMENT	1	
2	328420	MAGNET – ROUND	4	
3	322770	SPACER TUBE – PLASTIC	2	
4	314062	PIN – PIVOT	1	
5	213660	PIN – PIVOT	1	
6	213657	SPACER	1	
7	133877	BUSHING – PLASTIC FLANGED 1.0 IN.	1	
8	213656	ROLLER	1	
9	308536	SHAFT – FINGER	1	
10	337206	HOLDER – AUGER FINGER	30	
11	248117	WHEEL, GUIDE – FINGERSHAFT	1	
12	248145	BUSHING – FLANGE	1	
13	213608	BLOCK – AUGER SHAFT	1	
14	248538	CASTING – PIVOT BLK, LH, MACH	1	
15	337152	KIT – FINGER [728]	22	
	7642	PIN – SPRING 3/16 DIA X 1.5 LG	A/R	
16	123180	PIN – HAIR	22	
17	276839	KIT – FINGER HOLDER SPLIT 5X (BAG OF 5) [729]	A/R	
A	184675	BOLT – HEX HD M12 X 1.75 X 70-8.8-AA1J		
B	136759	NUT – HEX CTR LOC M12 X 1.75-8-AA1J		
C	252703	BOLT – HEX HD TFL M6 X 1 X 20 X SPCL-12.9-AF0C		
D	197263	NUT – TEE M6 X 1		

727. The complete feed auger assembly includes all listed parts in Section *169 Auger Drum and Internal Components, page 423*, Section *170 Auger Assembly – Right Arm, page 425*, and Section *171 Auger Assembly – Left Arm, page 429*.
728. The finger kit includes solid finger (not sold separately), spring pin (MD #7642), guide (MD #337143), and instructions.
729. The split finger holder kit is used to simplify field replacement of broken one-piece solid finger holders (MD #337206). The kit includes set of five split auger finger holders (NSS), holder spacers (NSS), hair pins (MD #123180), tee nuts (MD #197263), and bolts (MD #252703).

170 Auger Assembly – Right Arm

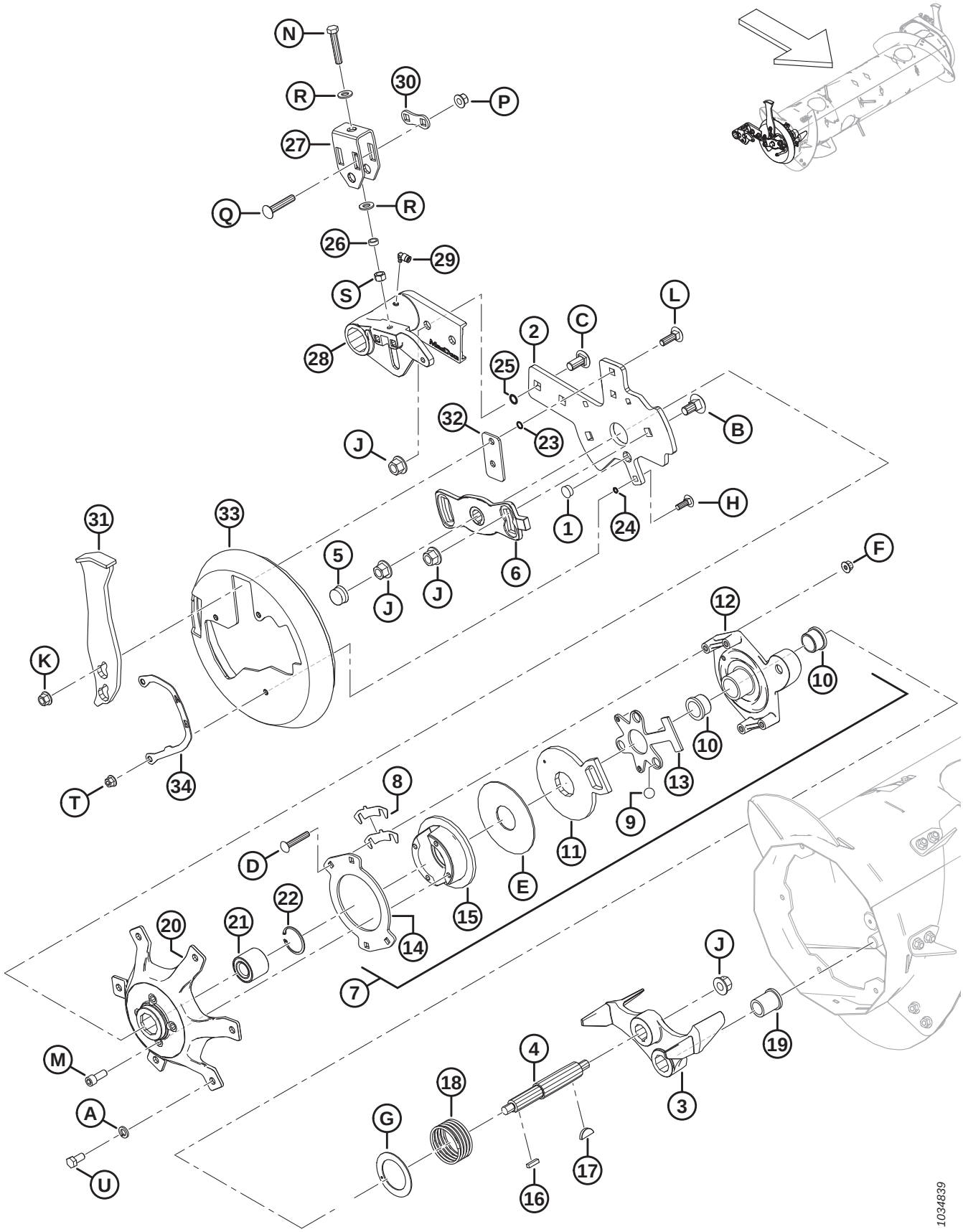

AUGER ASSEMBLY – RIGHT ARM

Ref	Part Number	Description	Qty	Serial Number
1	308859	PLUG – HOLE	1	
2	308850	BAR – RH AUGER SUPPORT	1	
3	304520	CASTING – STOP, MACHINING	1	
4	304514	SHAFT – AUGER	1	
5	276140	CAP – PLASTIC	1	
6	213851	CASTING – TIMING PLATE, MACH	1	
7	213802	ASSEMBLY – REVERSING CLUTCH [730]	1	
8	276206	SHIM CLUTCH	4	
9	248285	BALL	3	
10	213859	BUSHING – PLASTIC 1.25 X 1.5 X 1.0	2	
11	213801	ARM, CLUTCH ACTIVATOR – MACH	1	
12	213649	CAST, CLUTCH HOUSING – MACH	1	
13	337124	PLATE – BALL CAGE	1	
14	213554	DISC – CLUTCH	1	
15	213552	DISC, BRAKE – MACHINING	1	
16	213750	KEY, RECT – 6.35 MM SQ 25.5 MM LG	1	
17	213654	KEY – WOODRUFF 1/4 X 1-1/4	1	
18	213679	SPRING – COMPRESSION	1	
19	213659	BUSHING – FLANGE	1	
20	213546	HUB MACHINING RH	1	
21	337284	BEARING – DOUBLE ROW BALL, 52MM OD	1	
22	21235	RING – INT RETAINING	1	
23	183508	O-RING – 1.78 X 10.82	2	
24	183506	O-RING – 1.78 X 7.65	3	
25	50083	O-RING – Ø2.62 X Ø13.94	2	
26	314169	SPACER	1	
27	314136	BRACKET – ADJUSTER	1	
28	308538	PIVOT – RH AUGER, MACHINING	1	
29	301427	FITTING – QUICK DC, 90 DEG	1	
30	187428	SPACER	1	
31	308648	BUMPER – WELDMENT	1	
32	308056	PLATE – SPACER	1	
33	301994	COVER – AUGER END CAP RH	1	
34	276180	PLATE – INDICATOR RH	1	
A	18638	WASHER – REG. LOCK 1/2 IN. NOM. ID AA1J		
B	252691	BOLT – RHSN M16 X 2 X 35-10.9-AA1J		
C	252638	BOLT – RHSSN M16 X 2 X 35-8.8-AA1J		
D	252701	BOLT – RHSSN TFL M10 X 1.5 X 60-8.8-AA1J		
E	213731	WASHER – PLASTIC		
F	135799	NUT – HEX FLG CTR LOC M10 X 1.5-10		
G	213733	WASHER – THRUST		
H	184662	BOLT – RHSN TFL M10 X 1.5 X 30-8.8-AA1J		

730. The reversing clutch assembly includes parts #8–15 and hardware (MD #252701, MD #213731, and MD #135799).

AUGER ASSEMBLY – RIGHT ARM

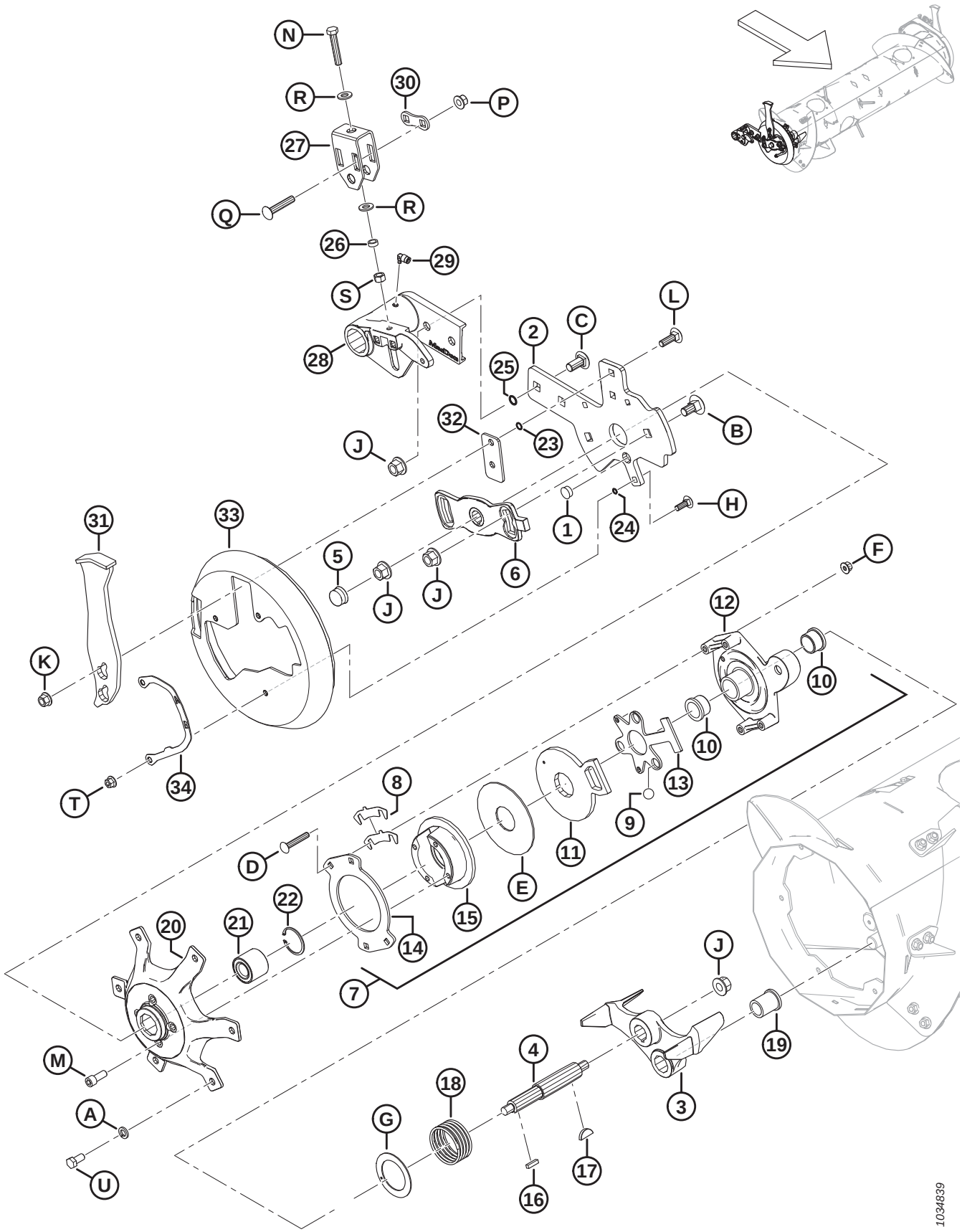

Ref	Part Number	Description	Qty	Serial Number
J	136440	NUT – HEX FLG CTR LK M16 X 2-10-AA1J		
K	136431	NUT – HEX FLG CTR LOC M12 X 1.75-10		
L	135900	BOLT – RHSN TFL M12 X 1.75 X 40-8.8-ZINC		
M	50154	SCREW – HEX SOC HD TFL M12 X 1.75 X 30-8.8-AA1J		
N	252541	BOLT – HEX HD TFL M12 X 1.75 X 65-8.8-AA3L		
P	252188	NUT – HEX FLG CTR LK M12 X 1.5-10-AA1J		
Q	252187	BOLT – RHSSN M12 X 1.5 X 65-10.9-AA1J		
R	135369	WASHER – HARDENED ASTM F436 1/2		
S	135156	NUT – HEX M12 X 1.75-10-AA1J		
T	136441	NUT – HEX SER FLG M10 X 1.5-8-AA1J		
U	50155	BOLT – HEX HD TFL M12 X 1.75 X 25-8.8-AA1J		

171 Auger Assembly – Left Arm

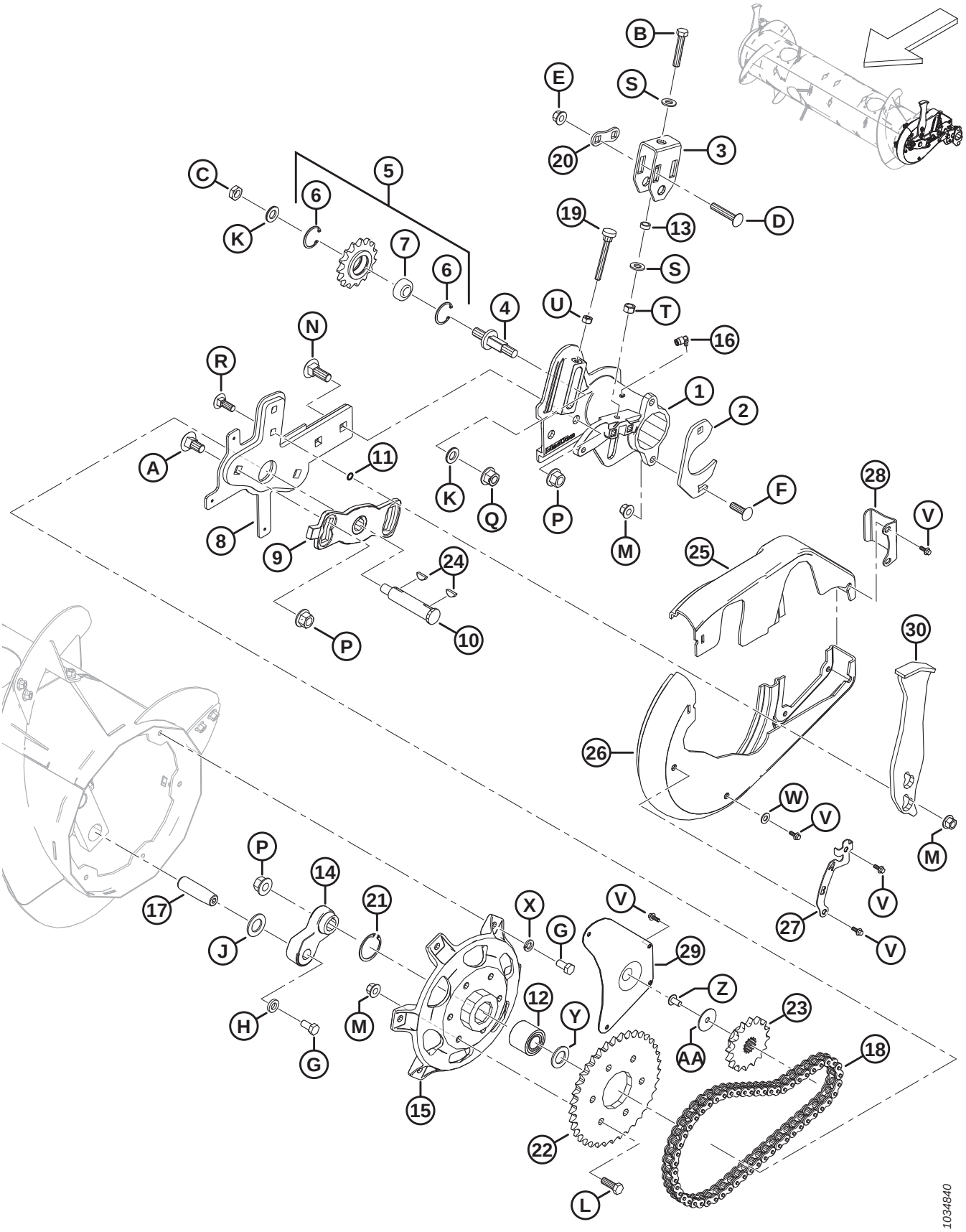

AUGER ASSEMBLY – LEFT ARM

Ref	Part Number	Description	Qty	Serial Number
1	322377	PIVOT – LH AUGER, MACHINING	1	
2	248388	CLAMP – PLATE	1	
3	314136	BRACKET – ADJUSTER	1	
4	213420	SPINDLE – THREADED ADJUSTMENT	1	
5	9333	ASSEMBLY – SPROCKET [731]	1	
6	795	RING – RETAINING	2	
7	9213	BEARING – BALL	1	
8	304931	ARM – LH AUGER SUPPORT WELDT	1	
9	213851	CASTING – TIMING PLATE, MACH	1	
10	301441	SHAFT – AUGER	1	
11	183508	O-RING – 1.78 X 10.82	2	
12	337284	BEARING – BALL DBL ROW 52 MM O.D. [732]	1	
	337804	KIT – LH RTD HUB WITH BEARING [733]	A/R	
13	314169	SPACER	1	
14	304521	ARM – FINGER SHAFT CRANK MACH	1	
15	337276	HUB – MACHINING [732]	1	
	337804	KIT – LH RTD HUB WITH BEARING [733]	A/R	
16	301427	FITTING – QUICK DC, 90 DEG	1	
17	248144	PIN – PIVOT	1	
18	220317	CHAIN – RC-60H, 56 PITCHES RIVETED, ENDLESS	1	
19	213857	THUMBSCREW – M10 X 80	1	
20	187428	SPACER	1	
21	21235	RING – INT. RETAINING (2021 AND LATER) [732]	1	
	181649	RING – RETAINING INTERNAL (2020 AND PRIOR) [734]	A/R	
22	151793	SPROCKET – RC 60 A 37 T	1	
23	151691	SPROCKET – RC 60 B 16 T	1	
24	135290	KEY – WOODRUFF (1/4 X 7/8 NOM.)	2	
25	301993	COVER – LH AUGER, SMALL HALF	1	
26	301992	COVER – LH AUGER, LARGE HALF	1	
27	276183	PLATE – INDICATOR LH	1	
28	213112	PLATE – COVER RETAINER	1	
29	213110	PANEL – ACCESS	1	
30	308648	BUMPER – WELDMENT	1	
A	252691	BOLT – RHSN M16 X 2 X 35-10.9-AA1J		
B	252541	BOLT – HEX HD TFL M12 X 1.75 X 65-8.8-AA3L		
C	252288	NUT – HEX THIN FINE M16 X 1.5-04-AA1J		
D	252187	BOLT – RHSSN M12 X 1.5 X 65-10.9-AA1J		
E	252188	NUT – HEX FLG CTR LK M12 X 1.5-10-AA1J		
F	197122	BOLT – RHSSN M12 X 1.75 X 40-8.8-AA1J		

731. The sprocket assembly includes sprocket (NSS), ball bearing (MD #9213), and two retaining rings (MD #795).
732. For model year 2021 and later.
733. Kit is used to service machines made prior to model year 2021. The kit includes hub (MD #337276), bearing (MD #337284), retaining ring (MD #21235), flat washer (MD #123406), and instructions.
734. Retaining ring (MD #181649) is used to service machines made prior to model year 2021.

AUGER ASSEMBLY – LEFT ARM

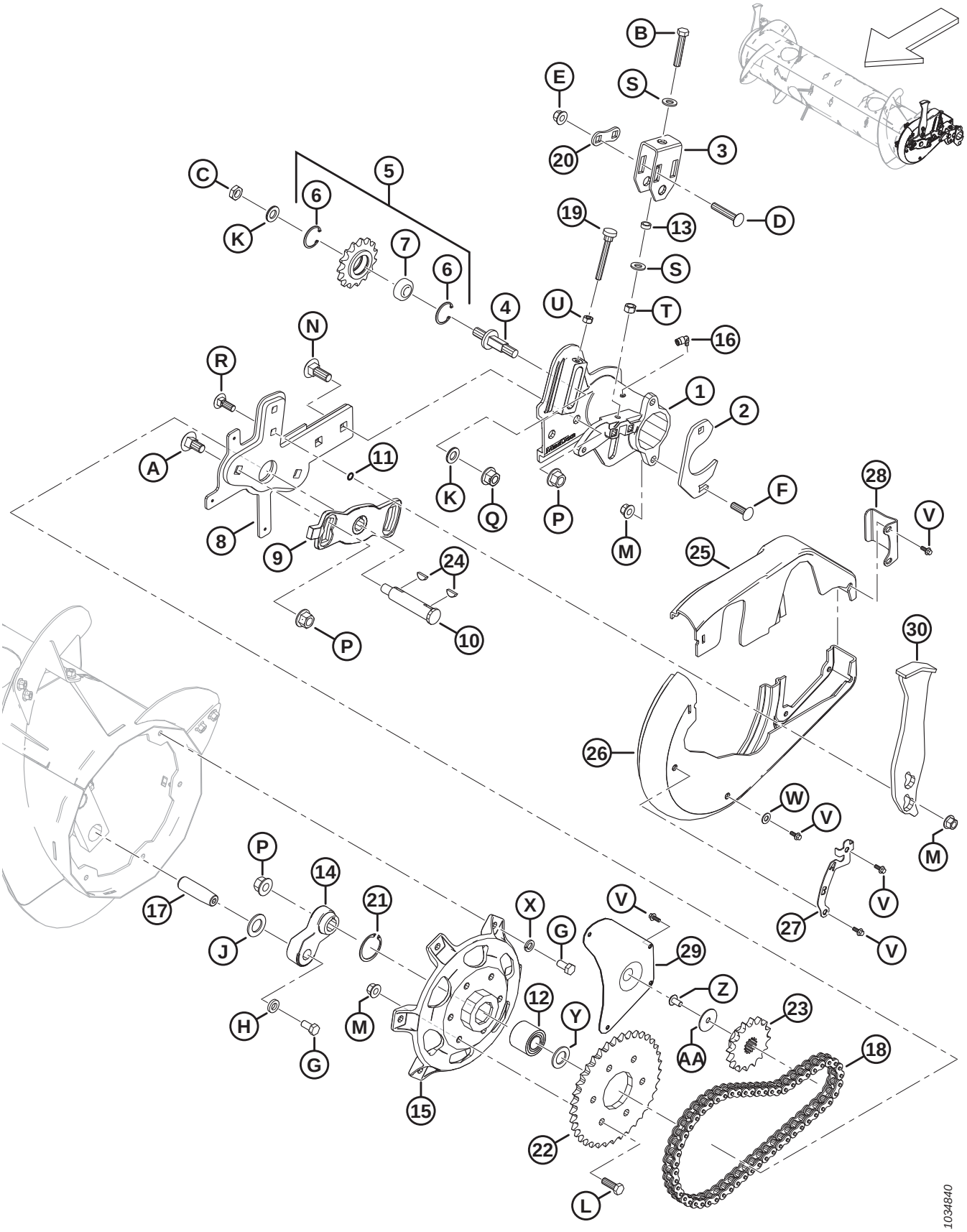

AUGER ASSEMBLY – LEFT ARM

Ref	Part Number	Description	Qty	Serial Number
G	50155	BOLT – HEX HD TFL M12 X 1.75 X 25-8.8-AA1J		
H	187518	WASHER – FLAT		
J	156743	WASHER – FLAT		
K	172558	WASHER – NORDLOCK 5/8 IN.		
L	152730	BOLT – HEX HD TFL M12 X 1.75 X 35-10.9-AA1J		
M	136431	NUT – HEX FLG CTR LOC M12 X 1.75-10		
N	136757	BOLT – RHSN M16 X 2 X 45-8.8-AAJ1		
P	136440	NUT – HEX FLG CTR LK M16 X 2-10-AA1J		
Q	136736	NUT – HEX FLG TOP LOCK M16 X 1.5-10-AA2L		
R	136291	BOLT – RHSN TFL M12 X 1.75 X 35-8.8-ZINC		
S	135369	WASHER – HARDENED ASTM F436 1/2		
T	135156	NUT – HEX M12 X 1.75-10-AA1J		
U	30505	NUT – HEX M10 X 1.5-10-AA1J		
V	252639	BOLT – HEX FLG HD M6 X 1 X 16 X SPCL-8.8-AA2L		
W	18598	WASHER – FLAT SAE 13/32 ID X 13/16 IN OD AA1J		
X	18638	WASHER – REG. LOCK 1/2 IN. NOM. ID AA1J		
Y	123406	WASHER – FLAT [732]		
Z	135157	SCREW – MACHINE		
AA	31465	WASHER – FLAT		

172 Auger – Float Linkage

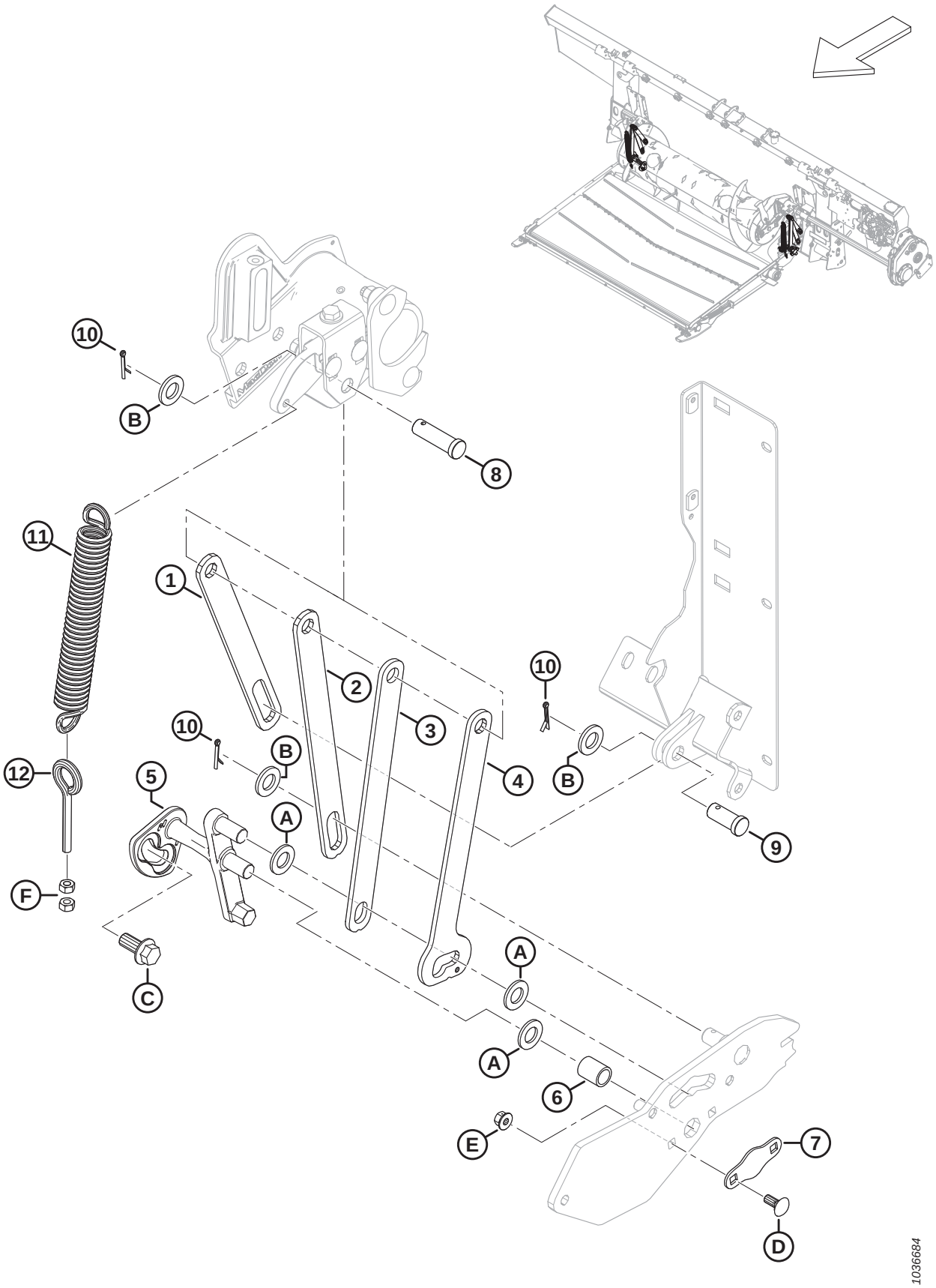

AUGER – FLOAT LINKAGE

Ref	Part Number	Description	Qty	Serial Number
1	322914	BAR – AUGER SUPPORT, LIMITER	2	
2	301805	BAR – AUGER SUPPORT, REAR	2	
3	301806	BAR – AUGER SUPPORT, FRONT	2	
4	301807	BAR – AUGER SUPPORT DUAL POSITION	2	
5	337362	LEVER – LH CRANK LOCK, MACHINED	1	
	337366	LEVER – RH CRANK LOCK, MACHINED	1	
6	248348	TUBE – SPACER	2	
7	248349	PLATE – SECURING	2	
8	322970	PIN – CLEVIS, 50 MM LG	2	
9	11814	PIN – CLEVIS, 30 MM LG	2	
10	18648	PIN – COTTER 3/16 DIA X 1.25 ZP	6	
11	245966	SPRING – EXTENSION	2	
12	231448	EYE BOLT – M10 X 1.5 X 70-4.8-AA1J	2	
A	18601	WASHER – FLAT SAE		
B	112130	WASHER – HARD ASTM F436 3/4 IN. NOM. ID AB0C		
C	136378	BOLT – HEX FLG HD TFL M16 X 2 X 35-10.9		
D	135785	BOLT – RHSN M10 X 1.5 X 25-8.8-AA1J		
E	135799	NUT – HEX FLG CTR LOC M10 X 1.5-10		
F	30505	NUT – HEX M10 X 1.5-10-AA1J		

173 Auger Completion

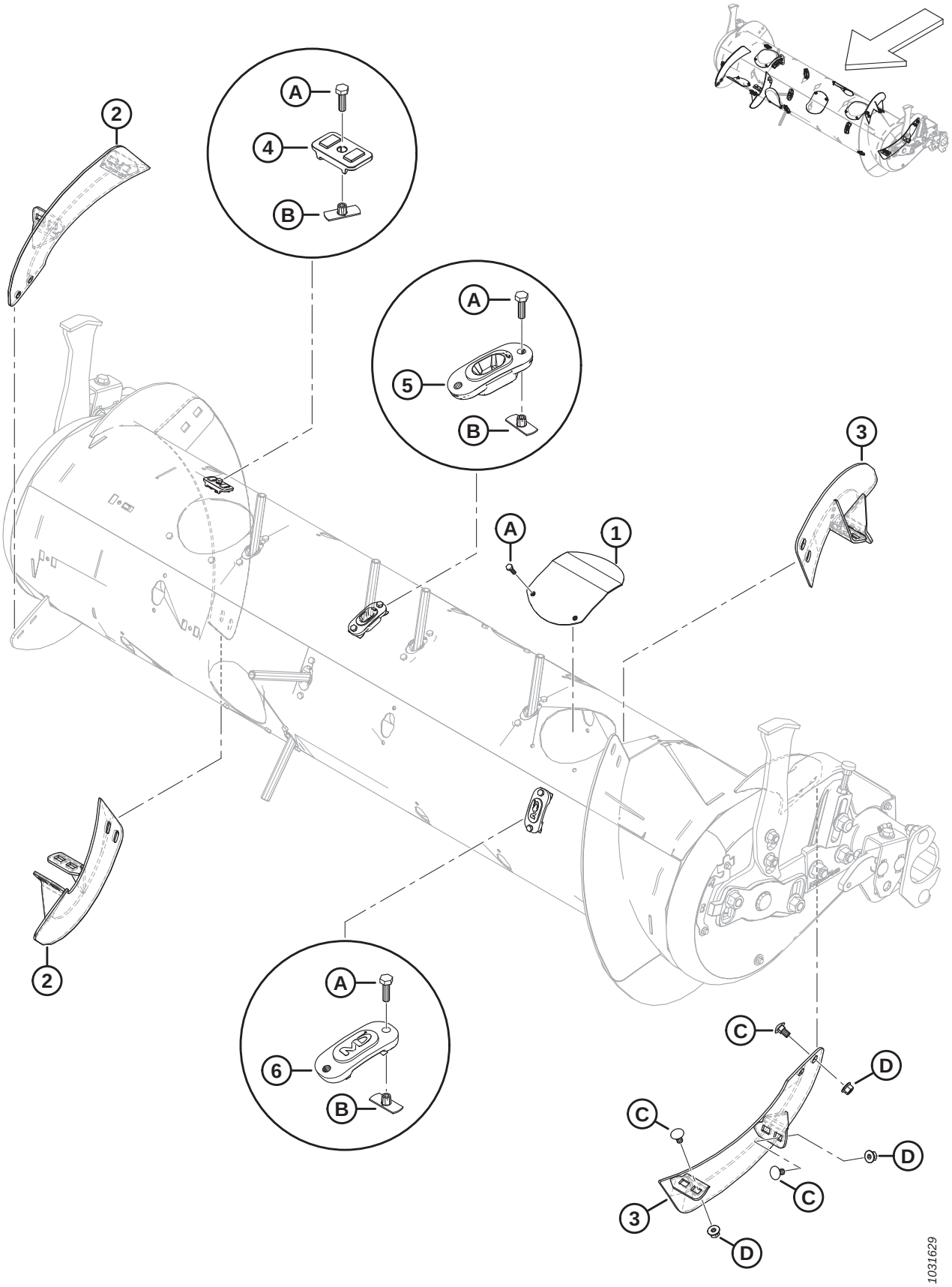

AUGER COMPLETION

Ref	Part Number	Description	Qty	Serial Number
1	304494	COVER WELDMENT	6	
2	287887	FLIGHTING – RH, MEDIUM, HIWEAR	2	
3	287888	FLIGHTING – LH, MEDIUM, HIWEAR	2	
4	213084	PLUG – FLIGHTING SLOT	4	
5	337143	GUIDE	22	
6	187137	PLUG	8	
A	252703	BOLT – HEX HD TFL M6 X 1 X 20 X SPCL-12.9-AF0C		
B	197263	NUT – TEE M6 X 1		
C	136178	BOLT – RHSN M10 X 1.5 X 20-8.8-AA1J		
D	135799	NUT – HEX FLG CTR LOC M10 X 1.5-10		

174 Auger Conversion Kits – Fingers and Flighting

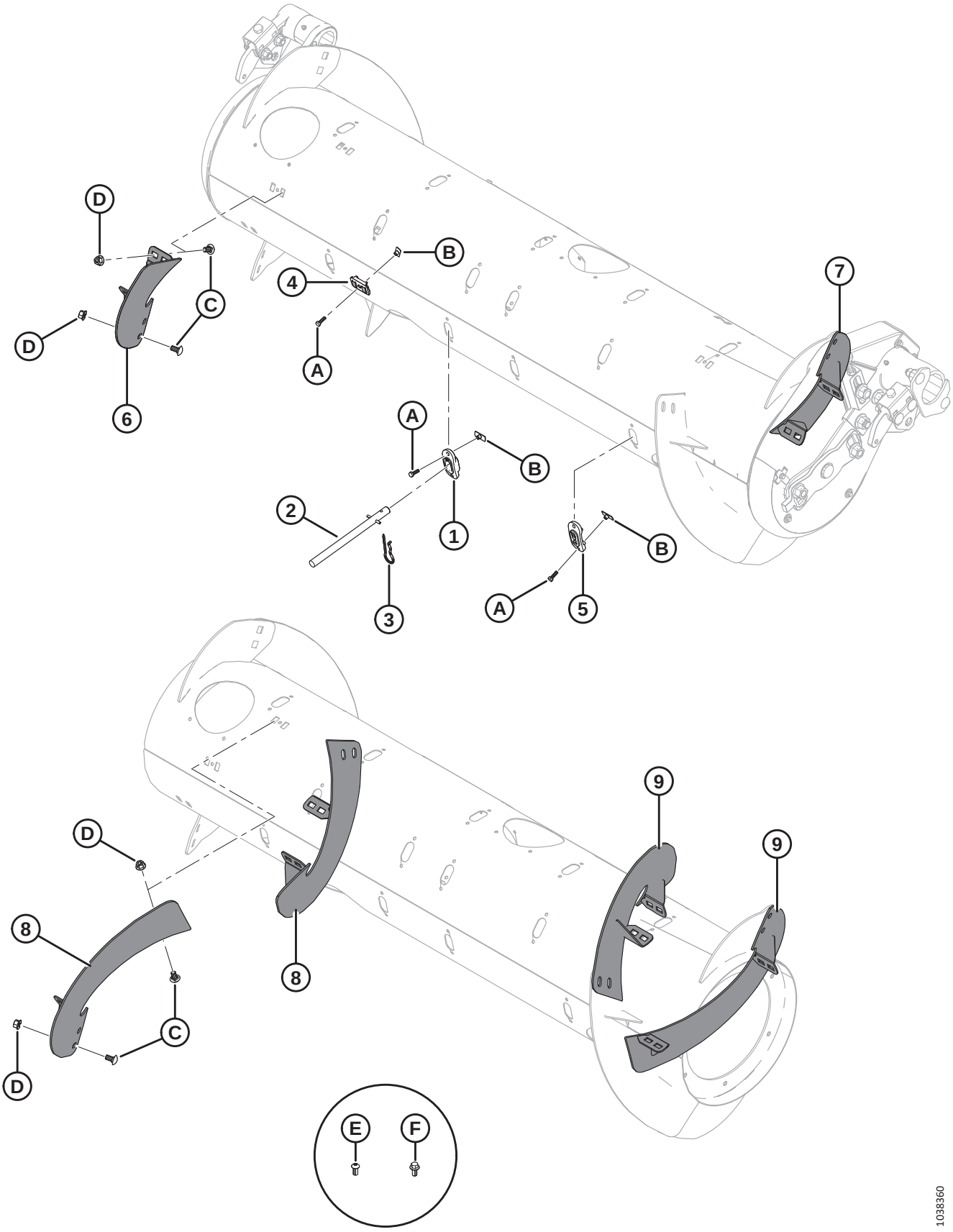

Ref	Part Number	Description	Qty	Serial Number
	B7343	KIT – FEED AUGER FINGERS, 4 PCS [735]		
	B7344	KIT – FLIGHTING, SHORT HI-WEAR [736]		
	B7345	KIT – FLIGHTING, LONG HI-WEAR [737]		
	357233	KIT – FLIGHTING, SHORT HI-WEAR [738]		
	357234	KIT – FLIGHTING, LONG HI-WEAR [739]		
1	337143	GUIDE	4	
2	337152	KIT – FINGER [740]	4	
3	123180	PIN – HAIR	4	
4	213084	PLUG – FLIGHTING SLOT	4	
5	187137	PLUG [741]		
6	287887	FLIGHTING, RTD – RH, MED (HI WEAR)	1	
7	287888	FLIGHTING, RTD – LH, MED (HI WEAR)	1	
8	287890	FLIGHTING, RTD – RH, LONG (HI WEAR)	2	
9	287889	FLIGHTING, RTD – LH, LONG (HI WEAR)	2	
A	252703	BOLT – HEX HD TFL M6 X 1 X 20 X SPCL-12.9-AA2L		
B	197263	NUT – TEE M6 X 1		
C	136178	BOLT – RHSN M10 X 1.5 X 20-8.8-AA1J		
D	135799	NUT – HEX FLG CTR LOC M10 X 1.5-10-A3L		
E	135723	SCREW – HEX SOC BTN HD M10 X 1.5 X 20-10.9-AA1J [742]		
F	152655	BOLT – HEX FLG HD M10 X 1.5 X 20-8.8-AA1J [743]		

735. Includes four solid fingers (MD #337152), guides (MD #337143), hair pins (MD #123180), flighting slots plugs (MD #213084), and hardware. Kits are available through Whole Goods only.
736. Includes one pair of short flighting (MD #287887 and MD #287888), four flighting slots plugs (MD #213084), four plugs (MD #187137), and hardware. Kits are available through Whole Goods only.
737. Includes two pairs of long flighting (MD #287889 and MD #287890), twelve plugs (MD #187137), and hardware. Kits are available through Whole Goods only.
738. Includes one pair of short flighting (MD #287887 and MD #287888), four flighting slots plugs (MD #213084), four plugs (MD #187137), hardware, and instructions.
739. Includes two pairs of long flighting (MD #287889 and MD #287890), twelve plugs (MD #187137), hardware, and instructions.
740. Includes solid finger (not sold separately), spring pin (MD #7642), guide (MD #337143), and instructions.
741. Quantities: B7344 = 4; B7345 = 12
742. For Ultra Narrow Configuration only; used on the new holes drilled in the flighting.
743. For Ultra Narrow Configuration only; used on the new holes drilled in the feed auger.

175 Auger – Crop Deflector Kits

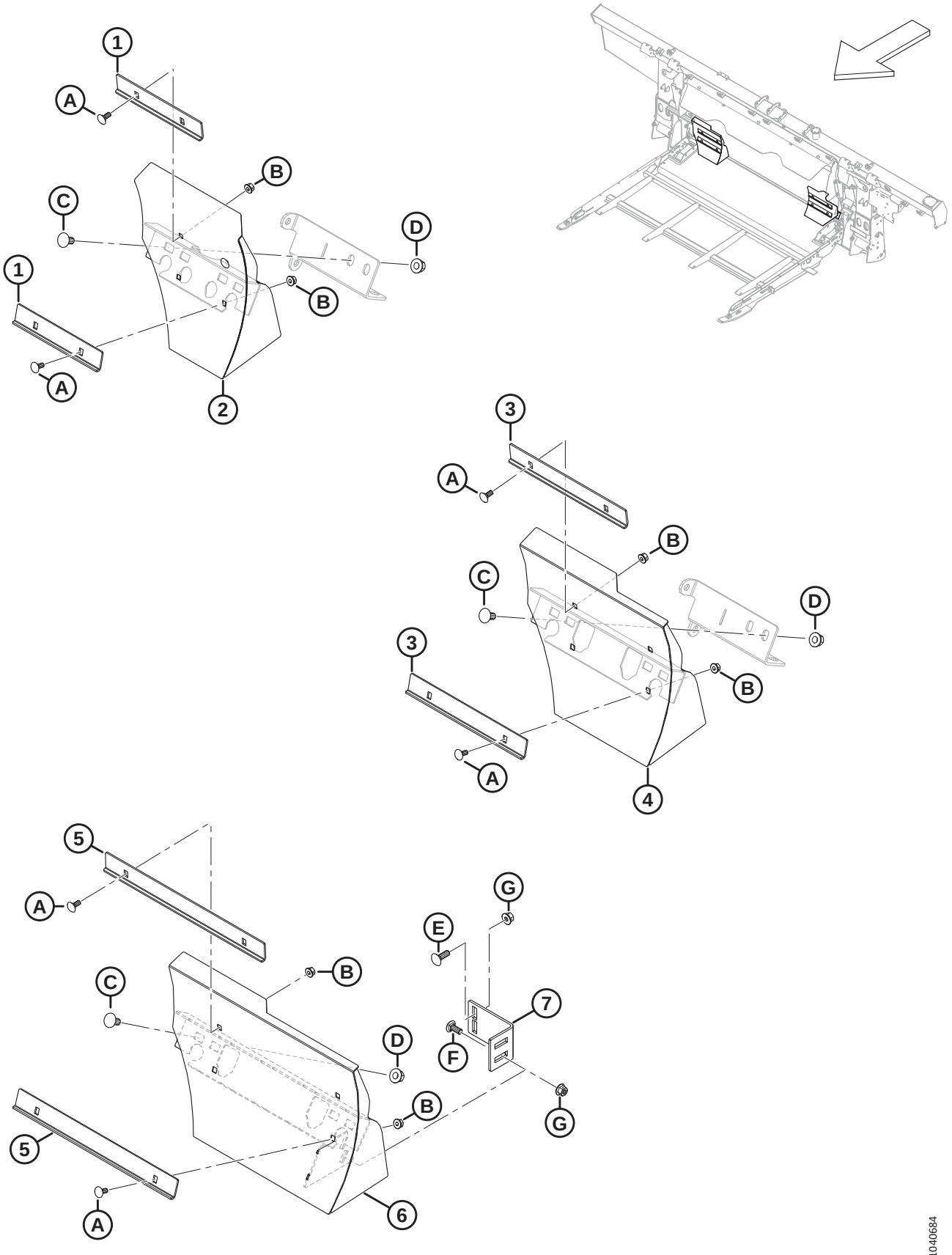

Ref	Part Number	Description	Qty	Serial Number
	B7348	KIT – DEFLECTORS, MEDIUM FEED AUGER [744]		
	B7347	KIT – DEFLECTORS, NARROW FEED AUGER [745]		
	B7314	KIT – DEFLECTORS, ULTRA NARROW [746]		
1	314680	ANGLE – SHORT STRIPPER [747]	4	
2	337777	DEFLECTOR – SHORT RH WELDT [747]	1	
	337778	DEFLECTOR – SHORT LH WELDT [747]	1	
3	328085	ANGLE – LONG STRIPPER [748]	4	
4	337779	DEFLECTOR – LONG RH WELDT [748]	1	
	337780	DEFLECTOR – LONG LH WELDT [748]	1	
5	328758	ANGLE – ULTRA LONG STRIPPER [749]	4	
6	328760	DEFLECTOR – ULTRA LONG WELDT RH [749]	1	
	328756	DEFLECTOR – ULTRA LONG WELDT LH [749]	1	
7	328763	FILLER BRACKET [749]	2	
A	197171	BOLT – RHSN M8 X 1.25 X 20-8.8-ZINC		
B	135337	NUT – HEX FLG CTR LK M8 X 1.25-8-AA1J		
C	152439	BOLT – RHSSN M12 X 1.75 X 25-8.8-AA1J		
D	136431	NUT – HEX FLG CTR LOC M12 X 1.75-10		
E	184662	BOLT – RHSN TFL M10 X 1.5 X 30-8.8-AA1J		
F	136506	BOLT – RHSSN M10 X 1.5 X 25-8.8-AA1J		
G	135799	NUT – HEX FLG CTR LOC M10 X 1.5-10		

744. For feeder opening widths of approximately 1317 mm (52 in.). Kits are available through Whole Goods only.
745. For feeder opening widths of approximately 1115 mm (44 in.). Kits are available through Whole Goods only.
746. For feeder opening widths of approximately 896 mm (35 in.). Kits are available through Whole Goods only
747. Included in B7348.
748. Included in B7347.
749. Included in B7314.

176 Auger – Grease Lines

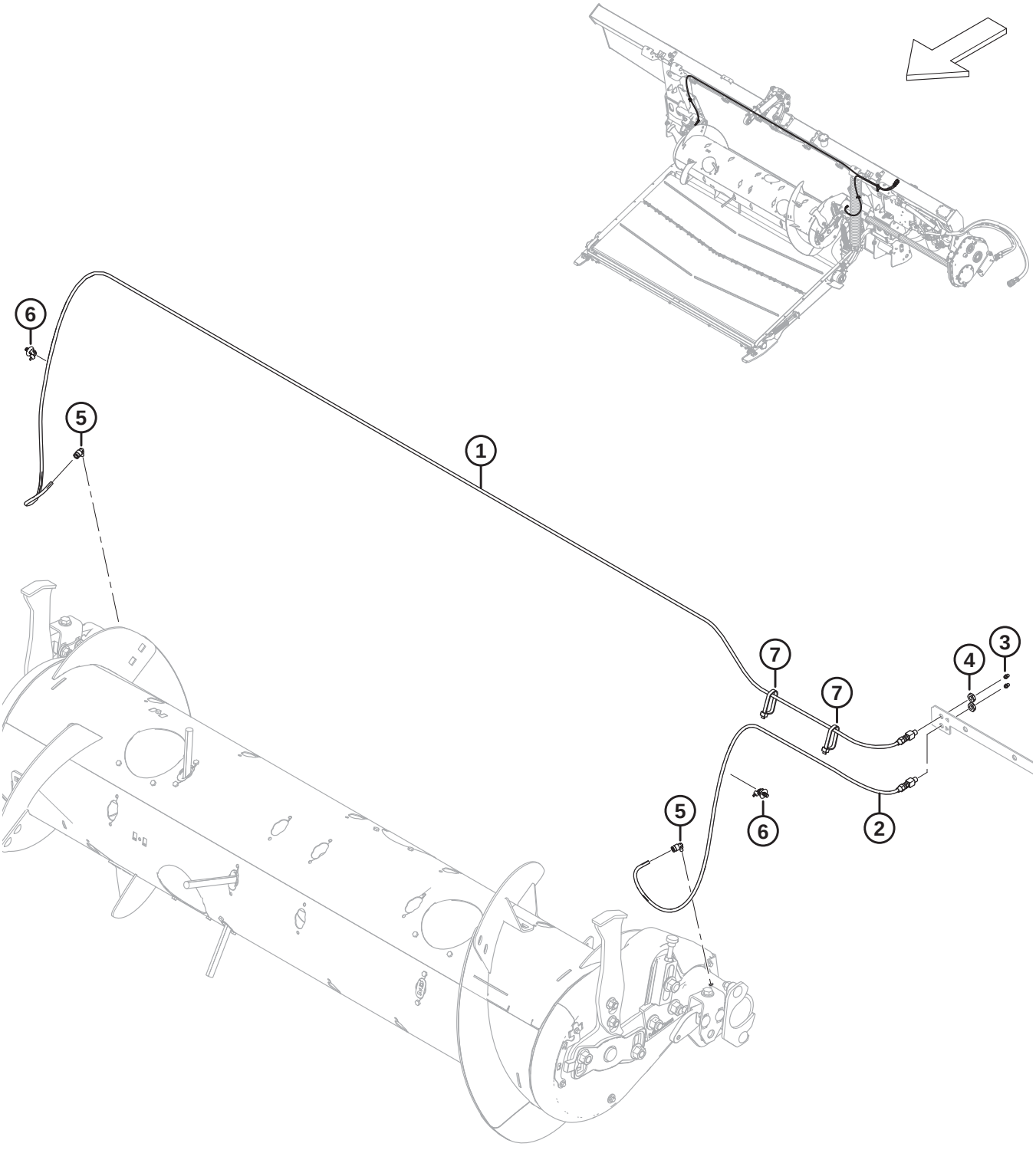

AUGER – GREASE LINES

Ref	Part Number	Description	Qty	Serial Number
1	322961	GREASE LINE – 3170 MM LG [750]	1	
2	322962	GREASE LINE – 1165 MM LG [750]	1	
3	18671	FITTING – LUBE 1/4 - 28 UNF	2	
4	320259	NUT – HEX 1/8-27 NPSM-SPCL-GR2-ZINC	2	
5	301427	FITTING – QUICK DC, 90°	2	
6	136655	FASTENER – FIR TREE MT W/ TIE	2	
7	30753	FASTENER – CABLE TIE, BLACK	2	

750. The grease line includes lube fitting (MD #18671) and hex nut (MD #320259).

177 Float Linkage and Float Setting and Measuring

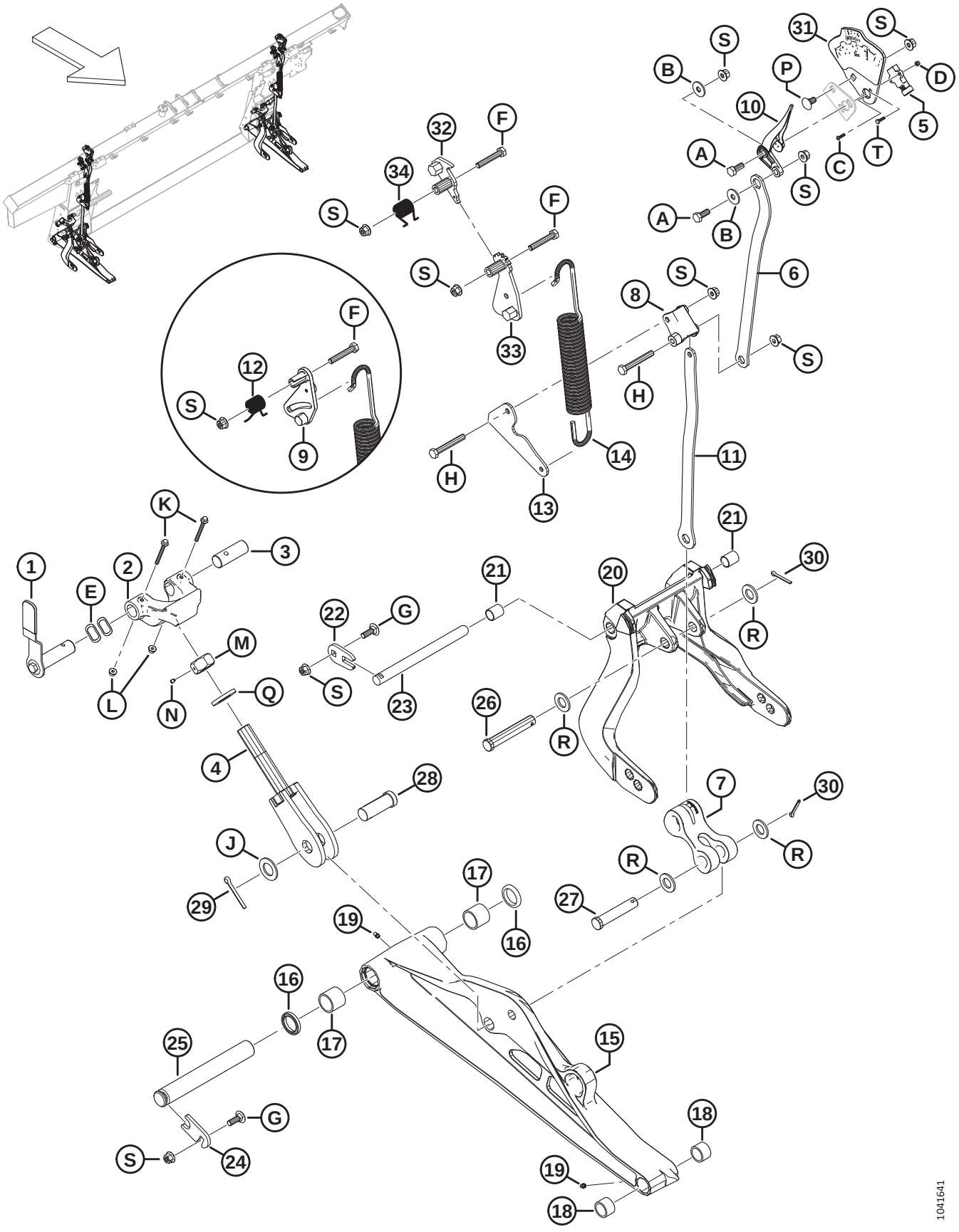

Ref	Part Number	Description	Qty	Serial Number
1	328538	HANDLE ASSY – FLOAT LOCK [751]	2	
	328491	GRIP – HANDLE	2	
2	301513	DOWNSTOP CASTING, MACHINED	2	
3	314276	PIN – PIVOT	2	
4	322219	BOLT – WELDMENT	2	
5	500303	SENSOR – ROTARY, DUAL CONTACTLESS [752]	2	
6	337634	PLATE – TOP LINK	2	
7	328133	LINK – ARM	2	
8	337821	LEVER – FSM MACHINED	2	
9	322981	CASTING – FSM LEVER (2023 AND PRIOR) [753]	A/R	
10	347923	INDICATOR NEEDLE	2	
11	337635	PLATE – BOTTOM LINK	2	
12	322046	SPRING – TORSION (2023 AND PRIOR) [754]	A/R	
13	337636	PLATE – SPRING LINK	2	
14	322557	SPRING – EXTENSION	2	
15	357299	ASSY – LOWER LINK [755]	2	
16	113222	SEAL KIT [756]		
17	100500	BEARING – NEEDLE	4	
18	49904	BEARING – NEEDLE	4	
19	320500	FITTING – LUBE 1/4-28 UNF TAPER	4	
20	357492	ASSEMBLY – FLOAT LEVER [757]	2	
21	156501	BUSHING – PLASTIC	4	
22	301633	PLATE	2	
23	335144	PIN – PIVOT	2	
24	212250	PLATE – PIN LOCK	2	
25	248261	PIN	2	
26	156741	PIN – CLEVIS	2	
27	20312	PIN – CLEVIS	2	
28	135995	PIN – CLEVIS	2	
29	18609	PIN – COTTER 1/4 DIA X 2 ZP	2	
30	18608	PIN – COTTER 3/16 DIA X 1.5 ZP	4	
31	357455	PLATE – INDICATOR W/ DECAL [758]	2	
32	360971	PAWL – FSM WELDMENT [759]	2	
33	360756	LEVER – FSM WELDMENT [759]	2	

751. The handle assembly includes float lock handle (NSS), handle grip (MD #328491), float lock pin (NSS), and hardware (MD #30627, MD #184712).
752. Rotary sensor MD #328412 has been superseded by rotary sensor MD #500303. Order rotary sensor MD #328412 until stock is depleted, then order rotary sensor MD #500303.
753. FSM lever (MD #322981) is a service part only for model year 2023 and prior machines.
754. Torsion spring (MD #322046) is a service part only for model year 2023 and prior machines.
755. The lower link assembly includes seal kit (MD #113222), two needle bearings (MD #100500), two needle bearings (MD #49904), and two lube fittings (MD #320500).
756. The seal kit includes one seal (NSS) and instructions.
757. The float lever assembly includes two plastic bushings (MD #156501).
758. The indicator plate assembly includes indicator plate (NSS), and float setting and measuring decal (MD #328142).
759. For model year 2024 and later machines.

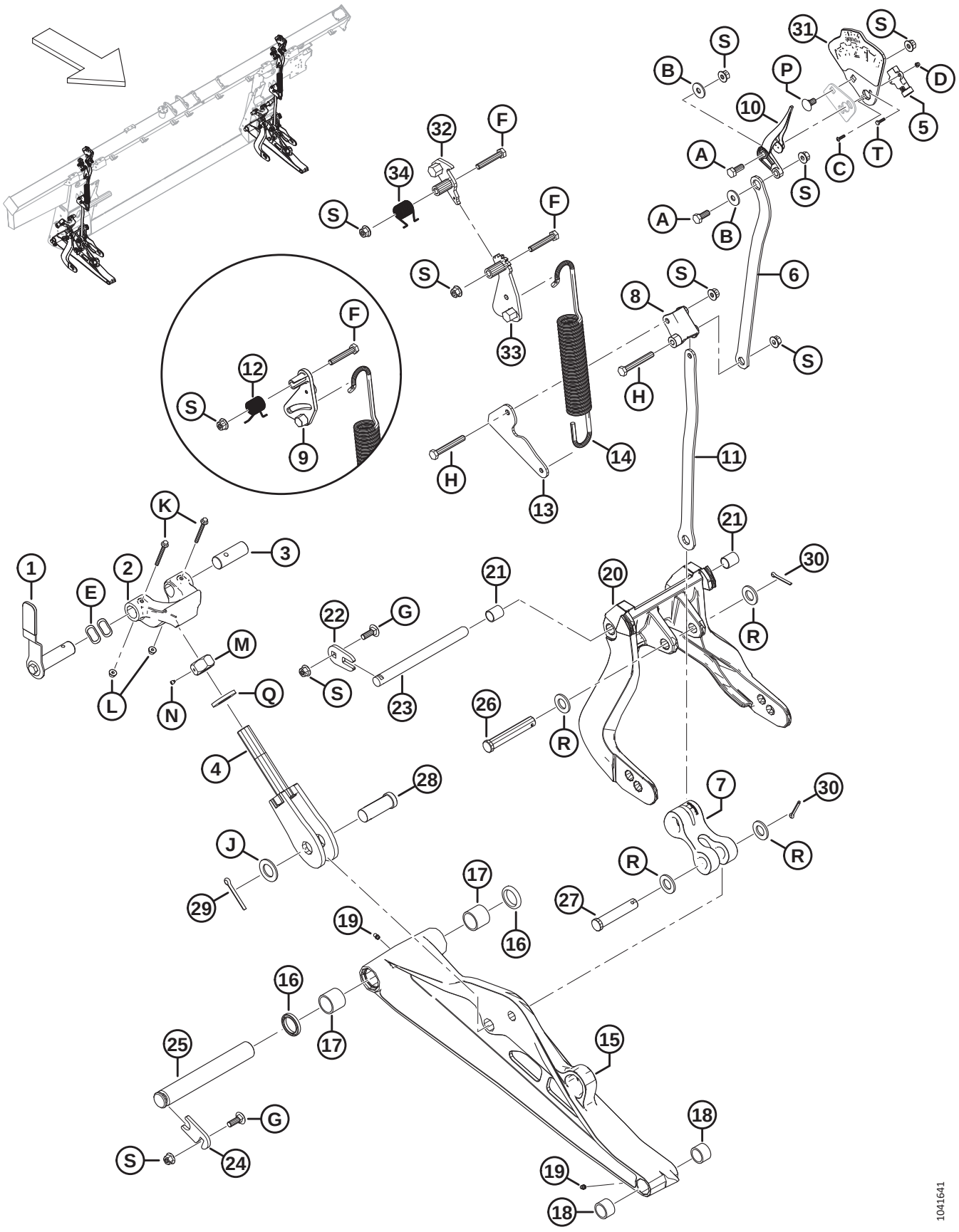
1041641

Ref	Part Number	Description	Qty	Serial Number
34	368017	SPRING – TORSION [759]	2	
A	30627	BOLT – HEX HD TFL M10 X 1.5 X 25-8.8-A3L		
B	184712	WASHER – FLAT LARGE M10-200HV		
C	320389	SCREW – HEX SOC BTN HD M4 X 0.7 X 16-A2-SS		
D	320390	NUT – HEX NYLOC M4 X 0.7-8-A2-SS		
E	252564	WASHER – WAVE		
F	184664	BOLT – HEX HD M10 X 1.5 X 60-8.8-AA1J		
G	184662	BOLT – RHSN TFL M10 X 1.5 X 30-8.8-AA1J		
H	184659	BOLT – HEX HD M10 X 1.5 X 75-8.8-AA1J		
J	156743	WASHER – FLAT		
K	136704	BOLT – HEX FLG HD M6 X 1 X 60-8.8-AA2L		
L	152668	NUT – HEX FLG CTR LOC M6 X 1-8		
M	133047	NUT – DOWNSTOP MACHINING		
N	136596	SCREW – SET CUP POINT 1/4-20 X 1/4		
P	136178	BOLT – RHSN M10 X 1.5 X 20-8.8-AA1J		
Q	31774	WASHER – FLAT 1-1/8-30 HRC-AC0C		
R	18601	WASHER – FLAT SAE		
S	135799	NUT – HEX FLG CTR LOC M10 X 1.5-10		
T	197319	BOLT – HEX HD TFL M4 X 0.7 X 16-8.8-AA1J		

178 Float Lock Pivot Rework Kit

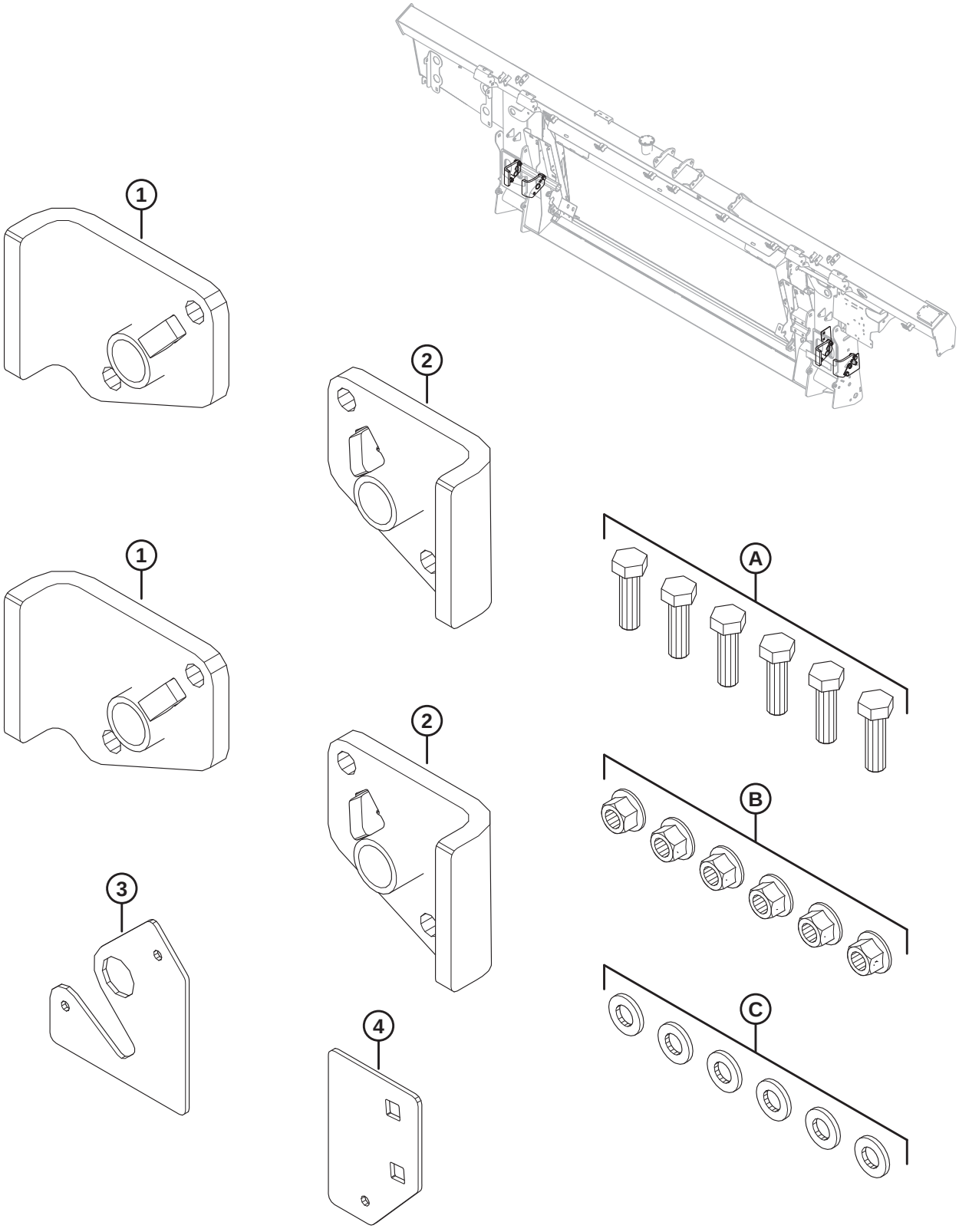

FLOAT LOCK PIVOT REWORK KIT

Ref	Part Number	Description	Qty	Serial Number
	352697	KIT – FLOAT LOCK PIVOT REWORK [760]	1	
1	NSS	ASSY – RH PIVOT REWORK	2	
2	NSS	ASSY – LH PIVOT REWORK	2	
3	NSS	PLATE – OUTER HOLES TEMPLATE	1	
4	NSS	PLATE – INNER HOLES TEMPLATE	1	
A	184669	BOLT – HEX HD M12 X 1.75 X 40-8.8-AA1J		
B	136431	NUT – HEX FLG CTR LOC M12 X 1.75-10		
C	30636	WASHER – FLAT NARROW M12-STL-SOFT-AA1J		

760. The kit includes all listed parts and instructions.

179 Float Springs

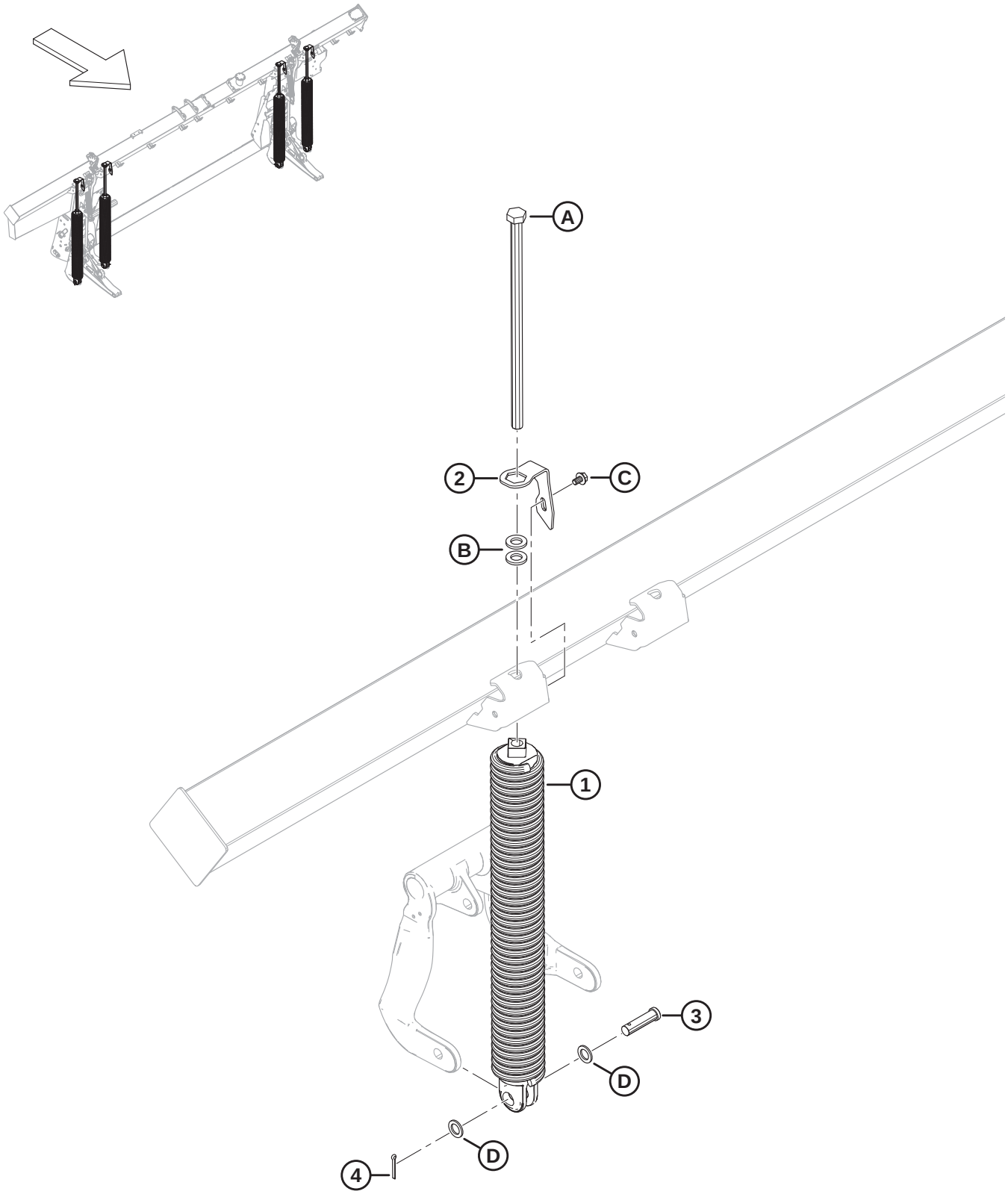

FLOAT SPRINGS

Ref	Part Number	Description	Qty	Serial Number
1	308878	SPRING – ASSEMBLY [761]		
	308879	SPRING – ASSEMBLY HEAVY [761]		
2	322668	LOCK – SPRING	4	
3	30463	PIN – CLEVIS	4	
4	18608	PIN – COTTER 3/16 DIA X 1.5 ZP	4	
A	136088	BOLT – HEX HD TFL M20 X 2.5 X 450 X SPCL-8.8-AA1J		
B	21540	WASHER – HARD ASTM F436 M20-340HV-AB2C		
C	136151	BOLT – HEX FLG HD TFL M10 X 1.5 X 16-8.8-AA1J		
D	1709	WASHER – FLAT		

761. There are four springs on each float module, but the combination of springs (MD #308878 and MD #308879) varies depending on header size. FD225 and FD230 single-knife headers require 4 x 308878; FD235 single-knife headers require 3 x 308878 and 1 x 308879 on the LH outboard side; FD235 double-knife headers require 3 x 308878 and 1 x 308879 on the RH outboard side; FD240 single-knife double reel headers require 3 x 308878 and 1 x 308879 on the LH outboard side; FD240 double-knife double reel, FD240 single-knife triple reel, FD240 double-knife triple reel, all FD241, and FD245 double-knife headers require 2 x 308878 on the inboard sides and 2 x 308879 on the outboard sides; FD250 double-knife headers require 3 x 308879 and 1 x 308878 on the LH inboard side.

180 Float Module Attaching and Filler Components – FM200 to FD2 Series (2021 and Prior)

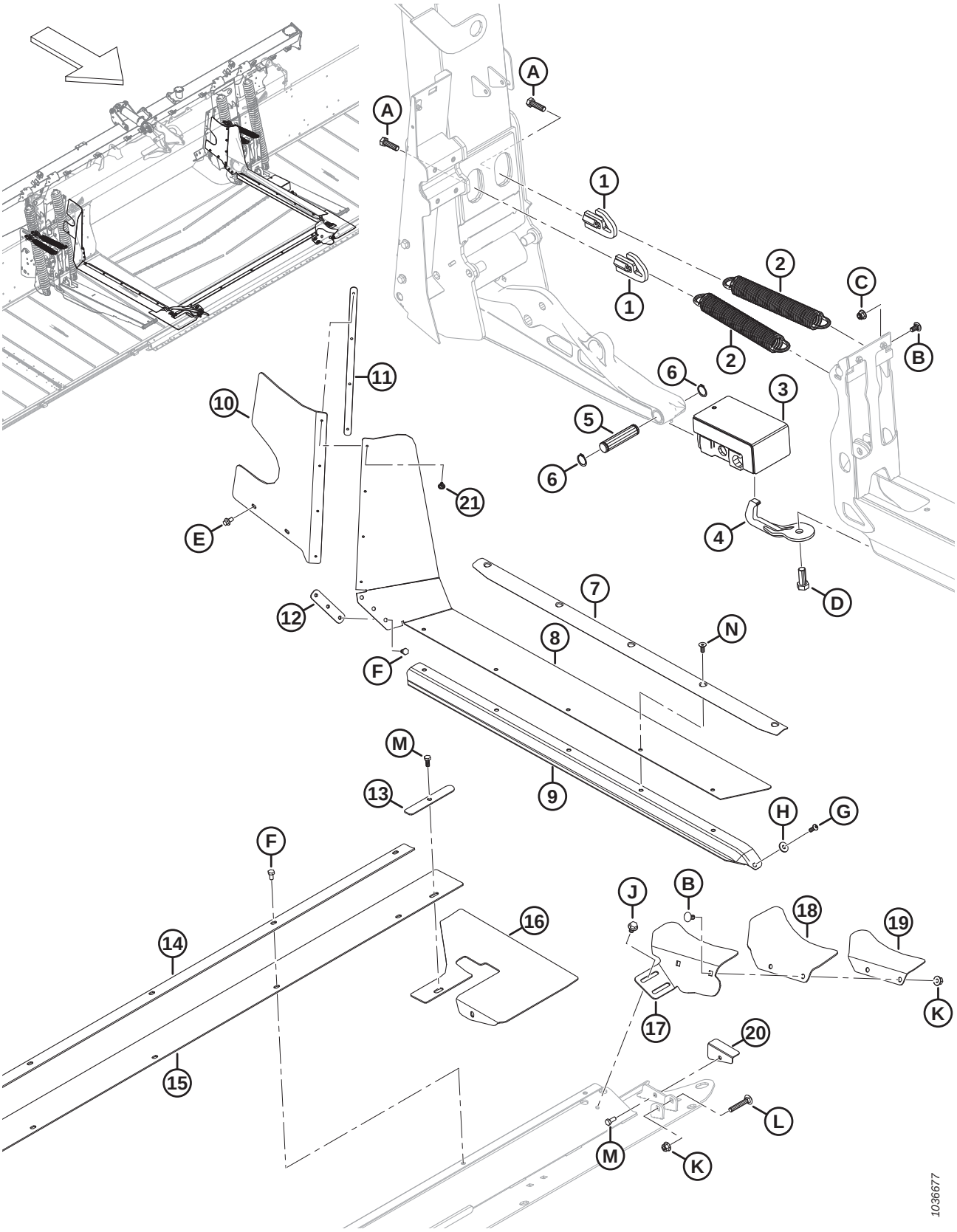

Ref	Part Number	Description	Qty	Serial Number
1	322676	TRIM SPRING TENSIONER – WELDT	4	–421189
2	340125	SPRING EXTENSION – HEADER TRIM	4	–421189
3	258703	RUBBER BLOCK FLEX – ASSY	2	–421189
4	258876	BREAKAWAY HOOK – WELDT	2	–421189
5	258318	PIN – PIVOT	2	–421189
6	18898	RING – EXT RETAINING	4	–421189
7	337407	RETAINER – SEAL AND FILLER	2	–421189
8	REF	FILLER – MID DECK SIDE FLEX [762]	2	–421189
	347963	KIT – MID FILLER UPPER [763]		–421189
9	REF	SEAL – DRAPER FEED DECK [764]	OPT	–421189
10	328348	FILLER – LH REAR UPPER	1	–421189
	328349	FILLER – RH REAR UPPER	1	–421189
11	276770	PLATE – FILLER RETAINER	2	–421189
12	213713	RETAINER – FILLER MACHINED	2	–421189
13	301127	PLATE – FILLER RETAINER	2	–421189
14	301126	RETAINER – CENTER FILLER	1	–421189
15	295261	FILLER – PAN CENTER	1	–421189
16	295992	FLAP – PAN CORNER FLEX	2	–421189
17	337457	SUPPORT – LH CORNER FILLER	1	–421189
	337463	SUPPORT – RH CORNER FILLER	1	–421189
18	304040	FLAP – CORNER FILLER	2	–421189
19	337456	RETAINER – LH CORNER FILLER	1	–421189
	337464	RETAINER – RH CORNER FILLER	1	–421189
20	276117	RETAINER – PAN FLAP LH	1	–421189
	276062	RETAINER – PAN FLAP RH	1	–421189
21	293053	RIVET – POP	8	–421189
A	184669	BOLT – HEX HD M12 X 1.75 X 40-8.8-AA1J		
B	184657	BOLT – RHSSN M10 X 1.5 X 20-8.8-AA1J		
C	252807	NUT – HEX FLANGE NYLOC M10 X 1.5-8-AA1J		
D	111528	BOLT – HEX HD TFL M16 X 2 X 40-8.8-AA1J		
E	136485	BOLT – HEX FLG HD TFL M8 X 1.25 X 16-8.8-AA1J		
F	50139	BOLT – HEX HD TFL M8 X 1.25 X 16-8.8-AA1J		
G	320176	SCREW – HEX SOC BTN HD M8 X 1.25 X 20-10.9-AA1J		
H	184709	WASHER – FLAT LARGE M8-200HV		
J	136231	BOLT – HEX SER FLG HD M10 X 1.5 X 16 X SPCL-8.8		
K	135799	NUT – HEX FLG CTR LOC M10 X 1.5-10		
L	136113	BOLT – RHSN M10 X 1.5 X 60-8.8-AA1J		

762. The single-piece mid filler has been superseded by a thicker two-piece filler. If replacing a single-piece mid filler, order mid filler kit (MD #347963). The kit includes all parts required for both the left and right sides of the float module: two mid fillers (MD #347500), two upper mid fillers (MD #347775), two retainer plates (MD #347778), and rivets (MD #293053).
763. Includes all parts required for both the left and right sides of the float module: two mid fillers (MD #347500), two upper mid fillers (MD #347775), two retainer plates (MD #347778), and rivets (MD #293053).
764. For service parts, refer to Section *230 (Option) FM200 Full Interface Filler – FD2 Series, page 585*.

FLOAT MODULE ATTACHING AND FILLER COMPONENTS – FM200 TO FD2 SERIES (2021 AND PRIOR)

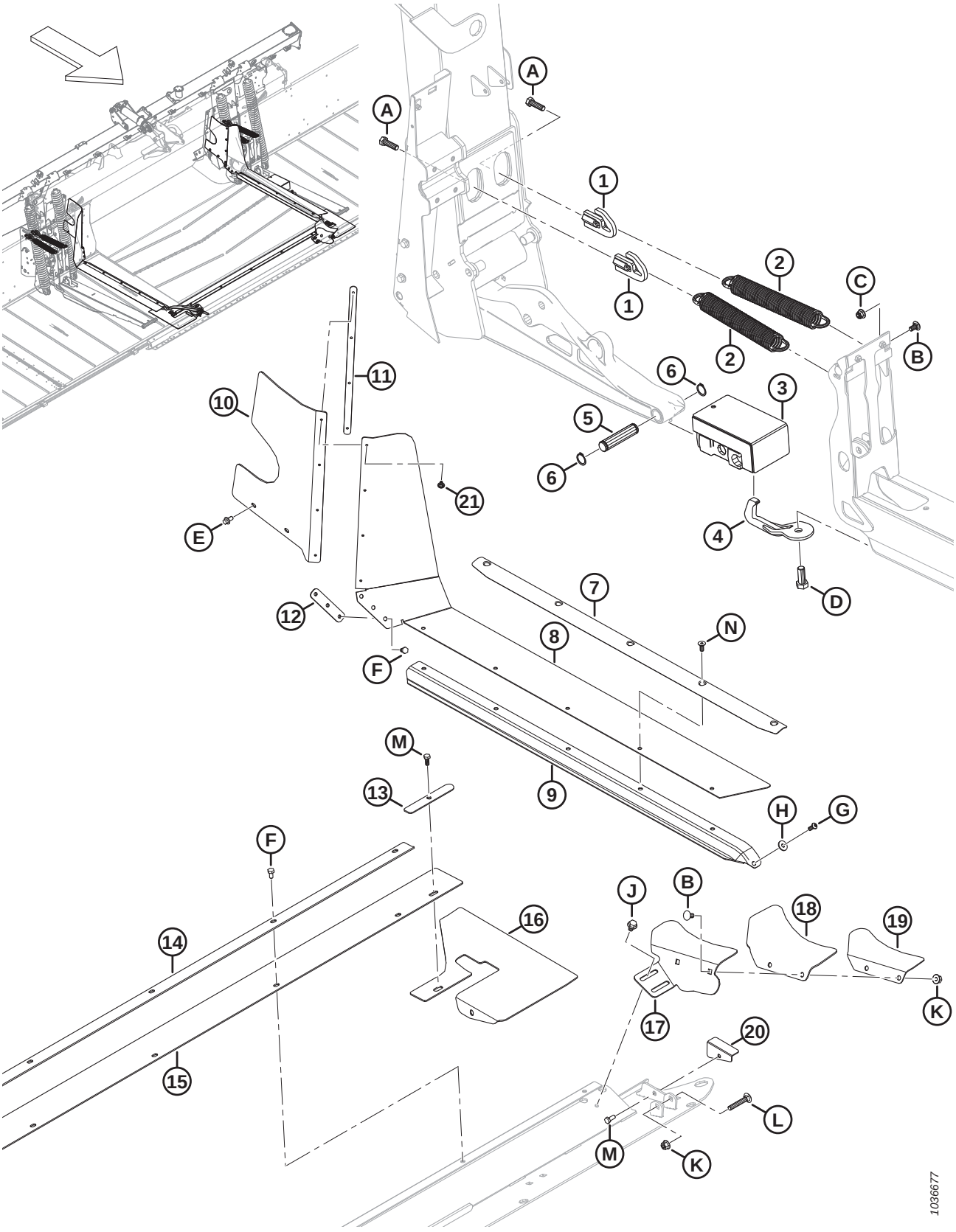

FLOAT MODULE ATTACHING AND FILLER COMPONENTS – FM200 TO FD2 SERIES (2021 AND PRIOR)

Ref	Part Number	Description	Qty	Serial Number
M	30715	BOLT – HEX HD TFL M8 X 1.25 X 20-8.8-AA1J		
N	136592	SCREW – HEX SOC CSK HD TFL M8 X 1.25 X 20-8.8-ZINC		

181 Float Module Attaching and Filler Components – FM200 to FD2 Series (2022 and Later)

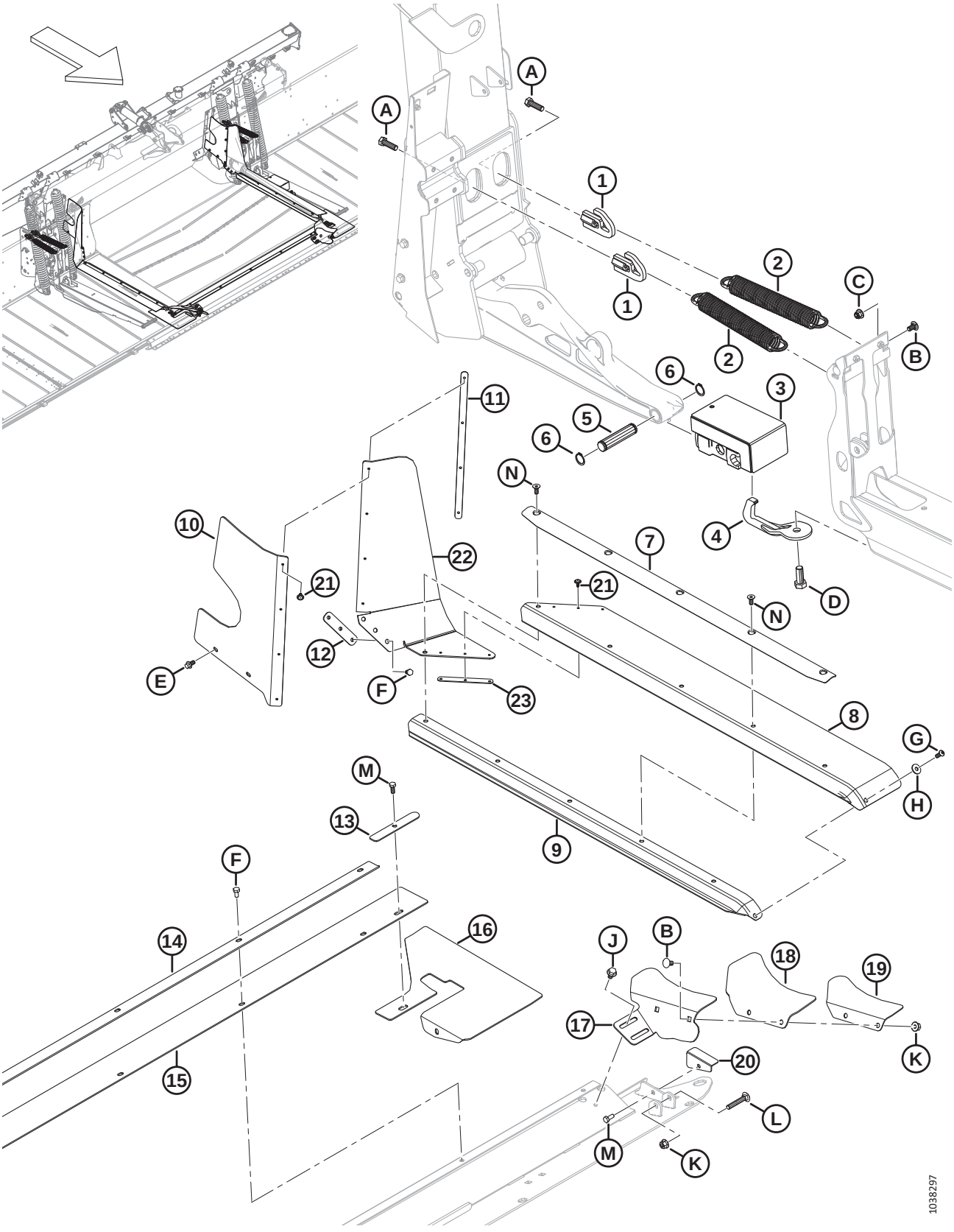

Ref	Part Number	Description	Qty	Serial Number
1	322676	TRIM SPRING TENSIONER – WELDT	4	421190–
2	340125	SPRING EXTENSION – HEADER TRIM	4	421190–
3	258703	RUBBER BLOCK FLEX – ASSY	2	421190–
4	258876	BREAKAWAY HOOK – WELDT	2	421190–
5	258318	PIN – PIVOT	2	421190–
6	18898	RING – EXT RETAINING	4	421190–
7	337407	RETAINER – SEAL AND FILLER	2	421190–
8	347500	FILLER – MID DECK SIDE	2	421190–
9	REF	SEAL – DRAPER FEED DECK [765]	OPT	421190–
10	328348	FILLER – LH REAR UPPER	1	421190–
	328349	FILLER – RH REAR UPPER	1	421190–
11	276770	PLATE – FILLER RETAINER	2	421190–
12	213713	RETAINER – FILLER MACHINED	2	421190–
13	301127	PLATE – FILLER RETAINER	2	421190–
14	301126	RETAINER – CENTER FILLER	1	421190–
15	295261	FILLER – PAN CENTER	1	421190–
16	295992	FLAP – PAN CORNER FLEX	2	421190–
17	337457	SUPPORT – LH CORNER FILLER	1	421190–
	337463	SUPPORT – RH CORNER FILLER	1	421190–
18	304040	FLAP – CORNER FILLER	2	421190–
19	337456	RETAINER – LH CORNER FILLER	1	421190–
	337464	RETAINER – RH CORNER FILLER	1	421190–
20	276117	RETAINER – PAN FLAP LH	1	421190–
	276062	RETAINER – PAN FLAP RH	1	421190–
21	293053	RIVET – POP	14	421190–
22	347775	FILLER – MID DECK SIDE UPPER	2	421190–
23	347778	PLATE – FILLER RETAINER	2	421190–
A	184669	BOLT – HEX HD M12 X 1.75 X 40-8.8-AA1J		
B	184657	BOLT – RHSSN M10 X 1.5 X 20-8.8-AA1J		
C	252807	NUT – HEX FLANGE NYLOC M10 X 1.5-8-AA1J		
D	111528	BOLT – HEX HD TFL M16 X 2 X 40-8.8-AA1J		
E	136485	BOLT – HEX FLG HD TFL M8 X 1.25 X 16-8.8-AA1J		
F	50139	BOLT – HEX HD TFL M8 X 1.25 X 16-8.8-AA1J		
G	320176	SCREW – HEX SOC BTN HD M8 X 1.25 X 20-10.9-AA1J		
H	184709	WASHER – FLAT LARGE M8-200HV		
J	136231	BOLT – HEX SER FLG HD M10 X 1.5 X 16 X SPCL-8.8		
K	135799	NUT – HEX FLG CTR LOC M10 X 1.5-10		
L	136113	BOLT – RHSN M10 X 1.5 X 60-8.8-AA1J		
M	30715	BOLT – HEX HD TFL M8 X 1.25 X 20-8.8-AA1J		
N	136592	SCREW – HEX SOC CSK HD TFL M8 X 1.25 X 20-8.8-ZINC		

765. For service parts, refer to Section *230 (Option) FM200 Full Interface Filler – FD2 Series, page 585*.

182 Feed Deck – Frame, Pivot Pins, and Front Support

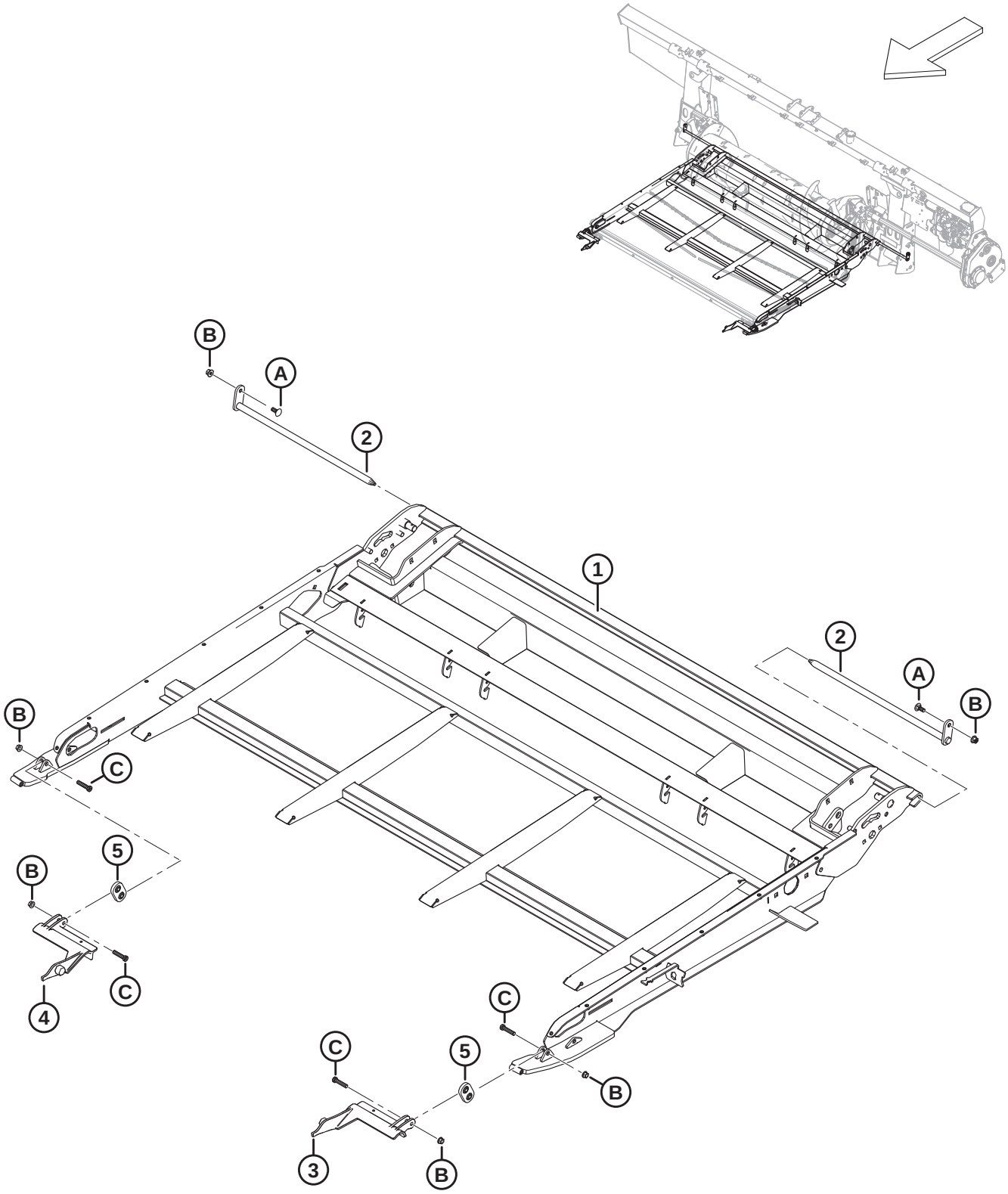

Ref	Part Number	Description	Qty	Serial Number
	368380	ASSY – FEED DECK [766]	1	
1	347665	FRAME – CARRIER, FEED DECK WELDT	1	
2	231368	PIN – DECK PIVOT WELDT	2	
3	213418	SUPPORT – LH ADAPTER LINK MACH	1	
4	213419	SUPPORT – RH ADAPTER LINK MACH	1	
5	308774	SUPPORT – HOOK ASSY	2	
A	135785	BOLT – RHSN M10 X 1.5 X 25-8.8-AA1J		
B	135799	NUT – HEX FLG CTR LOC M10 X 1.5-10		
C	320358	SCREW – HEX SOC HD M10 X 1.5 X 45-SPCL-8.8-ZINC		

766. Complete feed deck assembly. The assembly does not include pivot pins (MD #231368) and associated hardware, but includes all other parts listed in Section *182 Feed Deck – Frame, Pivot Pins, and Front Support, page 457* to Section *185 Feed Deck – Pans and Fillers, page 465*.

183 Feed Deck – Draper

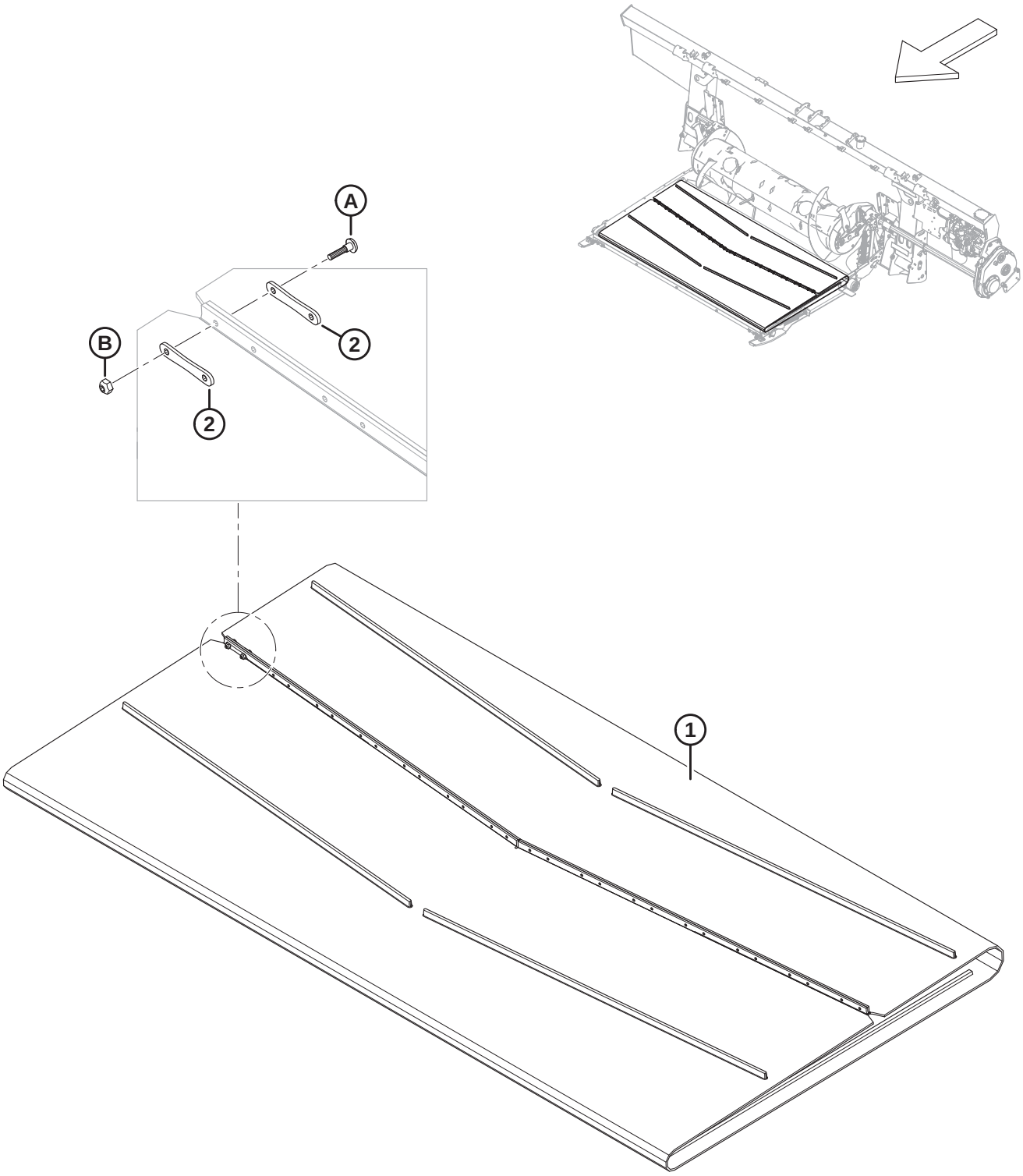

1032730

Ref	Part Number	Description	Qty	Serial Number
1	322555	DRAPER – 1988 MM (78.3 IN.) WIDE X 2205 MM LG	1	
2	130283	STRAP – DRAPER CONNECTOR	28	
A	135630	SCREW – BHRN #12-24 NCX 0.920 IN. LG (QTY 50)		
B	135626	NUT – #12-24 NC (QTY 50)		

184 Feed Deck – Drive/Idler Roller and Tensioner

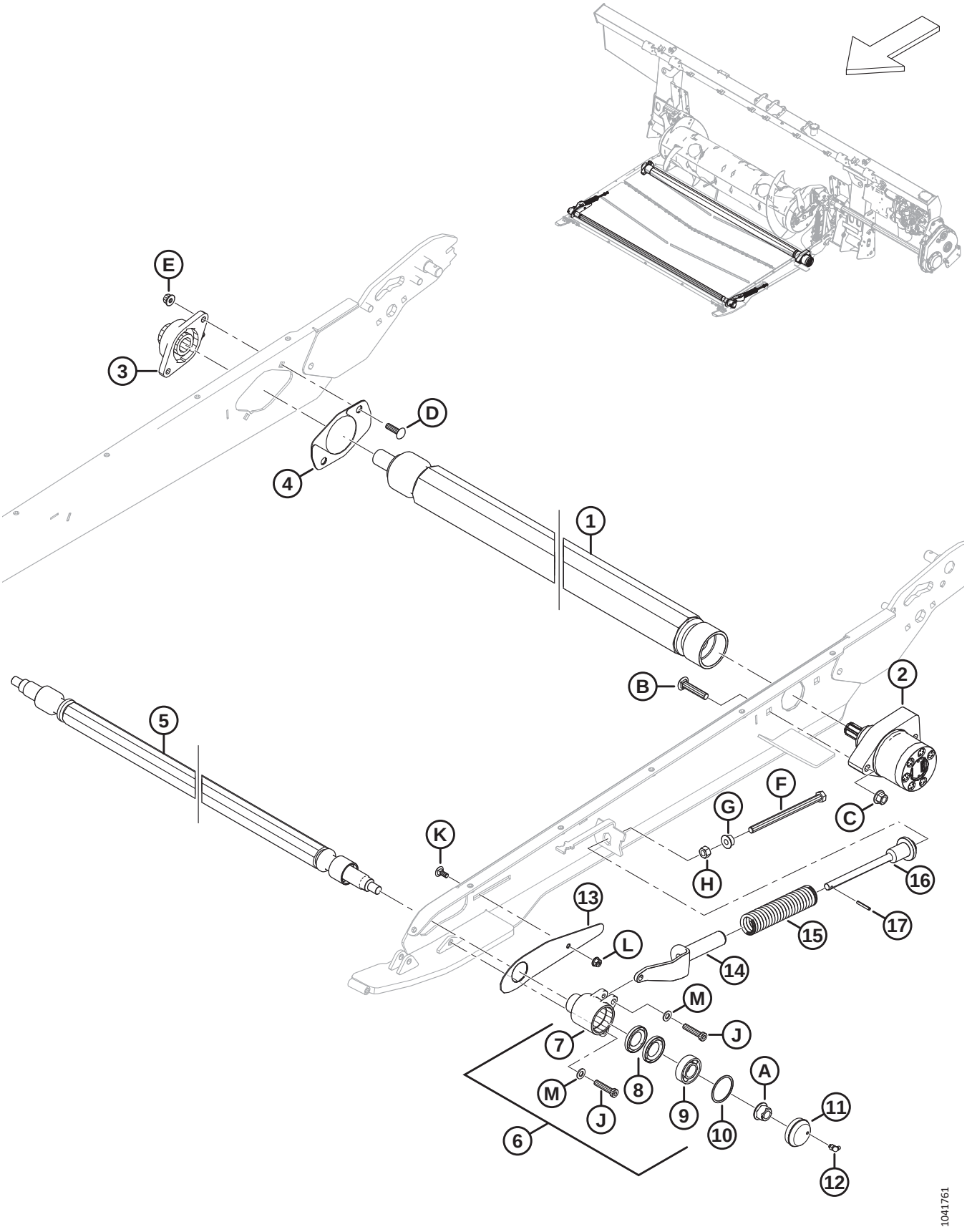

Ref	Part Number	Description	Qty	Serial Number
1	347483	ROLLER – DRIVE, VULCANIZED	1	
2	295853	MOTOR – HYD	1	
	245316	SEAL KIT		
3	347487	HOUSING – FL206 AND BEARING	1	
4	347553	KIT – DRIVE ROLLER COVER [767]	1	
5	295770	ROLLER – IDLER	1	
6	368460	KIT – IDLER CUP W/ INSTRUCTION (2024 AND LATER) [768]	2	
	335981	KIT – IDLER HOUSING AND GREASE CAP (2023 AND PRIOR) [769]	A/R	
7	335981	KIT – IDLER HOUSING AND GREASE CAP [770]	2	
8	100862	SEAL – OIL	4	
9	368457	KIT – BEARING W/ INSTRUCTION [771]	2	
10	118011	RING – RETAINING INTERNAL	2	
11	357230	ASSY – DUST CAP WITH FITTING (2024 AND LATER) [772]	2	
	133372	CAP – DUST (2023 AND PRIOR) [773]	A/R	
12	21010	FITTING – LUBE 90° 1/4-28 TAPER THD [774]	2	
13	295766	COVER – IDLER ROLLER	2	
14	328128	SUPPORT – DECK TENSION CASTING	2	
15	295407	SPRING – COMPRESSION	2	
16	328143	SUPPORT – SPRING MACHINED	2	
17	13617	PIN – SPRING 3/16 DIA X 1.25 LG	2	
A	152520	NUT – HEX FLG TECH LK M16 X 2-10-AA1J		
B	136308	BOLT – RHSSN M12 X 1.75 X 60-8.8-ZINC		
C	136431	NUT – HEX FLG CTR LOC M12 X 1.75-10		
D	136248	BOLT – RHSSN TFL M10 X 1.5 X 35-8.8-AA1J		
E	135799	NUT – HEX FLG CTR LOC M10 X 1.5-10		
F	252272	BOLT – HEX HD TFL M12 X 1.75 X 180-10.9-ZINC		
G	136036	NUT – HEX SM FLG M12 X 1.75-8-AA1J		

767. The kit includes two cover plates (not sold separately).
768. The Idler Housing kit (MD #368460) is used to service the idler housing assembly (item #6) for model year 2024 and later machines. The Idler Housing kit includes one idler housing (NSS), two oil seals (MD #100862), one bearing (MD #118185), one internal retaining ring (MD #118011), and instructions. The kit does NOT include the lube fitting (MD #21010), dust cap (NSS), or attaching bolts (MD #135319).
769. The Idler Housing and Grease Cap kit (MD #335981) is used to service the idler housing assembly (item #6) for model year 2023 and prior machines. The kit includes one dust cap assembly with fitting (MD #357230), one Idler Housing kit (MD #368460), and instructions.
770. The Idler Housing and Grease Cap kit (MD #335981) is also used to service superseded idler housing MD #314474 (item #7). The kit includes one dust cap assembly with fitting (MD #357230), one Idler Housing kit (MD #368460), and instructions.
771. The kit includes one 52 mm O.D. ball bearing (NSS) and instructions.
772. The Dust Cap with Fitting assembly (MD #357230) is used to service model year 2024 and later machines, or machines that have been serviced with the Idler Housing and Grease Cap kit (MD #335981). The assembly includes one dust cap (NSS) and one lube fitting (MD #21010).
773. Dust cap (MD #133372) is used to service model year 2023 and prior machines that have NOT been serviced with the Idler Housing and Grease Cap kit (MD #335981).
774. The lube fitting connects to the idler housing for model year 2023 and prior machines that have NOT been serviced with the Idler Housing and Grease Cap kit (MD #335981).

FEED DECK – DRIVE/IDLER ROLLER AND TENSIONER

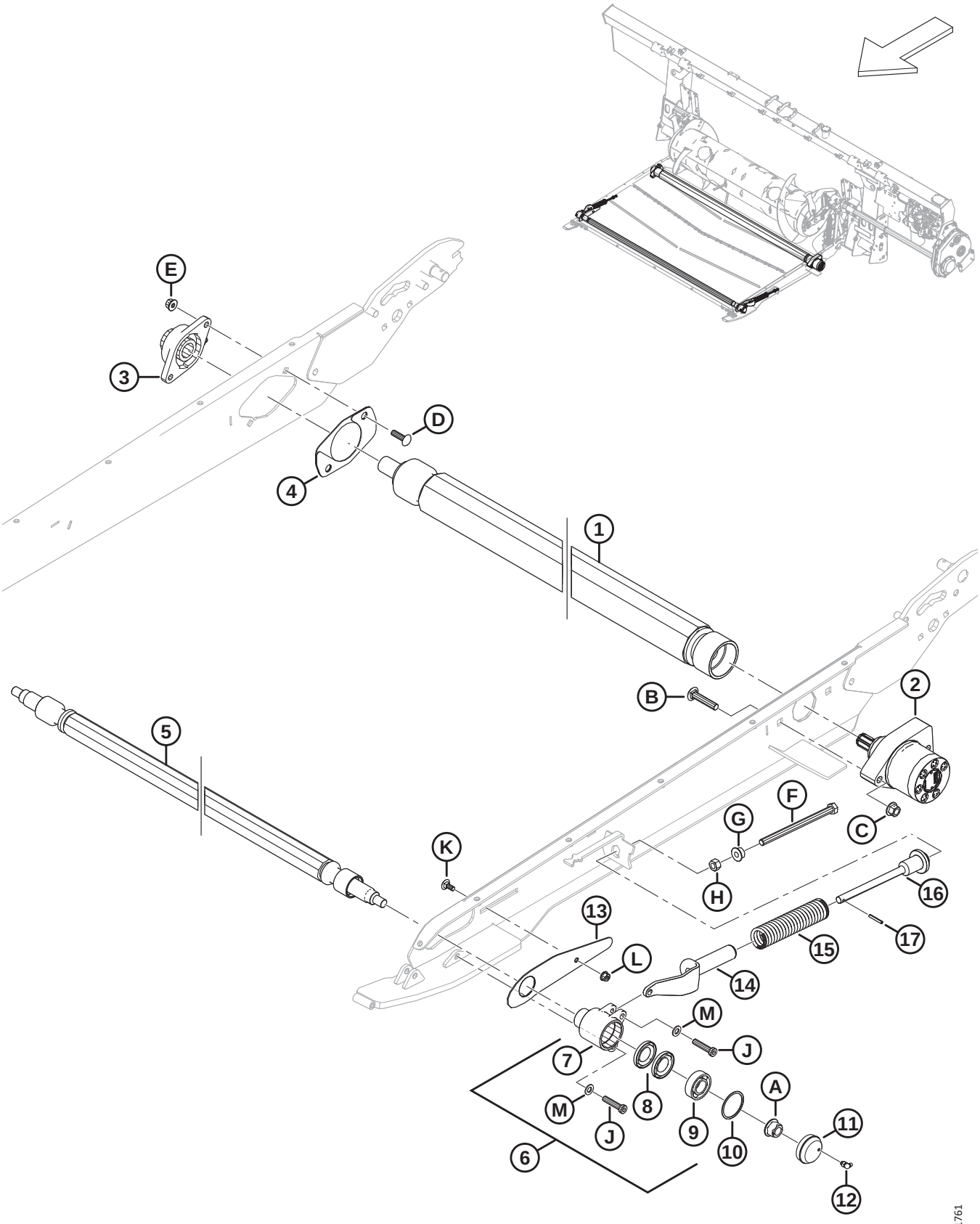

Ref	Part Number	Description	Qty	Serial Number
H	184694	NUT – HEX M12 X 1.75-8-AA1J		
J	320358	SCREW – HEX SOC HD M10 X 1.5 X 45-SPCL-8.8-ZINC		
K	197171	BOLT – RHSN M8 X 1.25 X 20-8.8-ZINC		
L	135337	NUT – HEX FLG CTR LK M8 X 1.25-8-AA1J		
M	184711	WASHER – FLAT REG M10-200HV-AA1J		

185 Feed Deck – Pans and Fillers

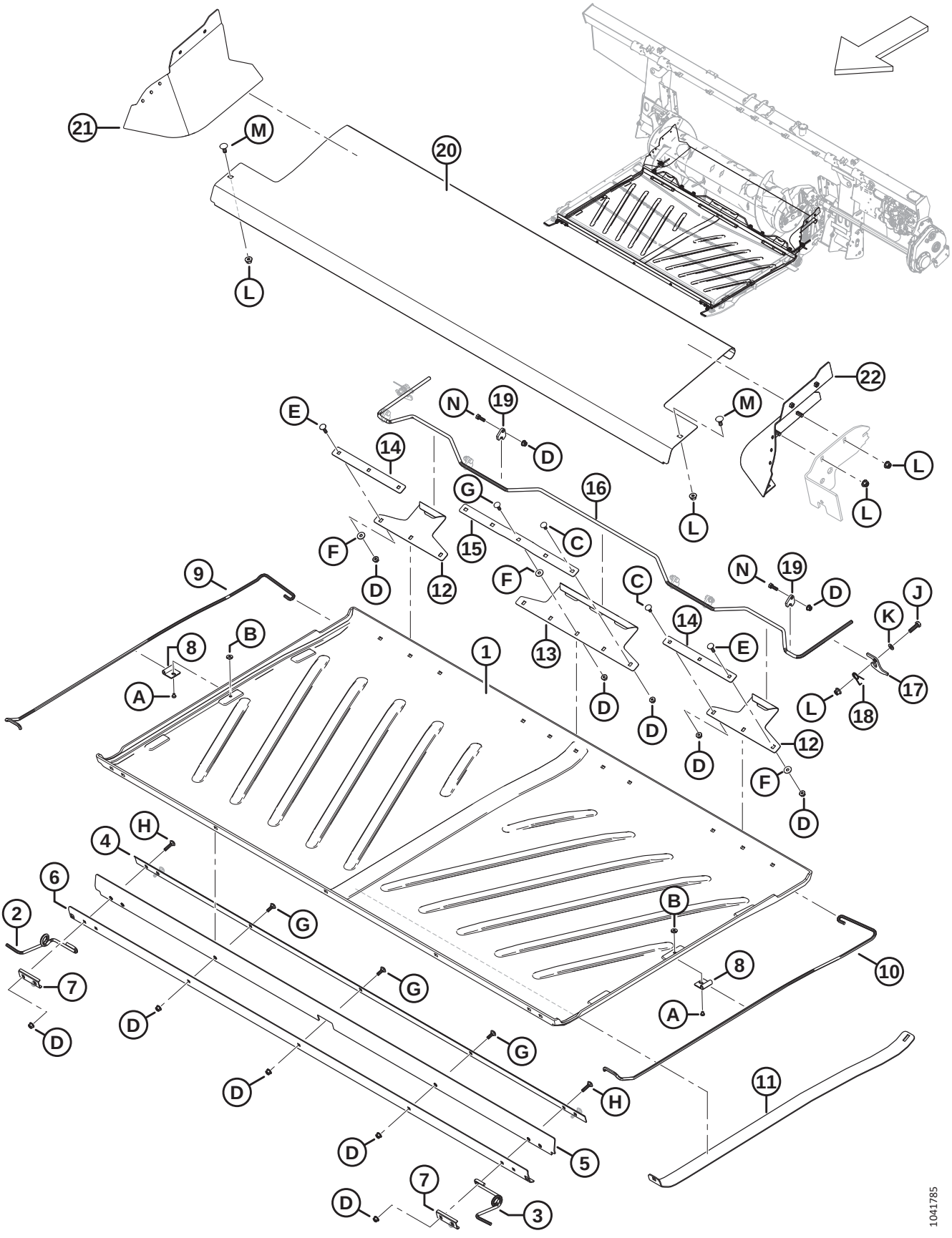

Ref	Part Number	Description	Qty	Serial Number
1	360927	PAN – FEED DECK [775]	1	
2	347691	SUPPORT – PAN FRONT SPRING RH	1	
3	347692	SUPPORT – PAN FRONT SPRING LH	1	
4	295213	PLATE – FRONT BAR INNER	1	
5	295212	FLAP – PAN FRONT	1	
6	295211	PLATE – FRONT BAR OUTER	1	
7	287939	RETAINER – FRONT SPRING	2	
8	248833	RETAINER – PAN SPRING	2	
9	213634	SUPPORT – PAN SPRING RH	1	
10	213633	SUPPORT – PAN SPRING LH	1	
11	213635	SUPPORT – PAN LIFTER	1	
12	240013	HOOK – REAR SIDE	2	
13	360924	HOOK – REAR CENTER [776]	1	
14	231765	BAR – SIDE HOOK	2	
15	360925	BAR – HOOK CENTER [777]	1	
16	240010	HANDLE – PAN LATCH	1	
17	240254	SUPPORT – PAN HANDLE LATCH	2	
18	159020	SPRING – TORSION	2	
19	248914	GUIDE – HANDLE LOCK	6	
20	240264	PAN – FEED DECK STAINLESS	1	
21	335912	FILLER – RH REAR CORNER WELDT	1	
22	335891	FILLER – LH REAR CORNER WELDT	1	
A	252291	SCREW – PAN HD M6 X 1 X 8-8.8-AA1J		
B	252051	NUT – TEE M6		
C	197171	BOLT – RHSN M8 X 1.25 X 20-8.8-ZINC		
D	135337	NUT – HEX FLG CTR LK M8 X 1.25-8-AA1J		
E	190752	BOLT – RHSN M8 X 1.25 X 30-8.8-AA1J		
F	184709	WASHER – FLAT LARGE M8-200HV		
G	184648	BOLT – RHSN M8 X 1.25 X 25-8.8-AA1J		
H	136050	BOLT – RHSN M8 X 1.25 X 35-8.8-AA1J		
J	30628	BOLT – HEX HD M10 X 1.5 X 35-8.8-AA1J		
K	184711	WASHER – FLAT REG M10-200HV-AA1J		
L	135799	NUT – HEX FLG CTR LOC M10 X 1.5-10		
M	135785	BOLT – RHSN M10 X 1.5 X 25-8.8-AA1J		
N	184652	BOLT – HEX HD TFL M8 X 1.25 X 25-8.8-AA1J		

775. Feed deck pan MD #276681 superseded by feed deck pan MD #360927. Order pan MD #276681 until stock is depleted, then order pan MD #360927.
776. Rear center hook MD #240012 superseded by rear center hook MD #360924. Order hook MD #240012 until stock is depleted, then order hook MD #360924.
777. Center hook bar MD #231766 superseded by center hook bar MD #360925. Order bar MD #231766 until stock is depleted, then order bar MD #360925.

186 Hydraulics – Center-Link and Header Tilt / Reel Fore-Aft

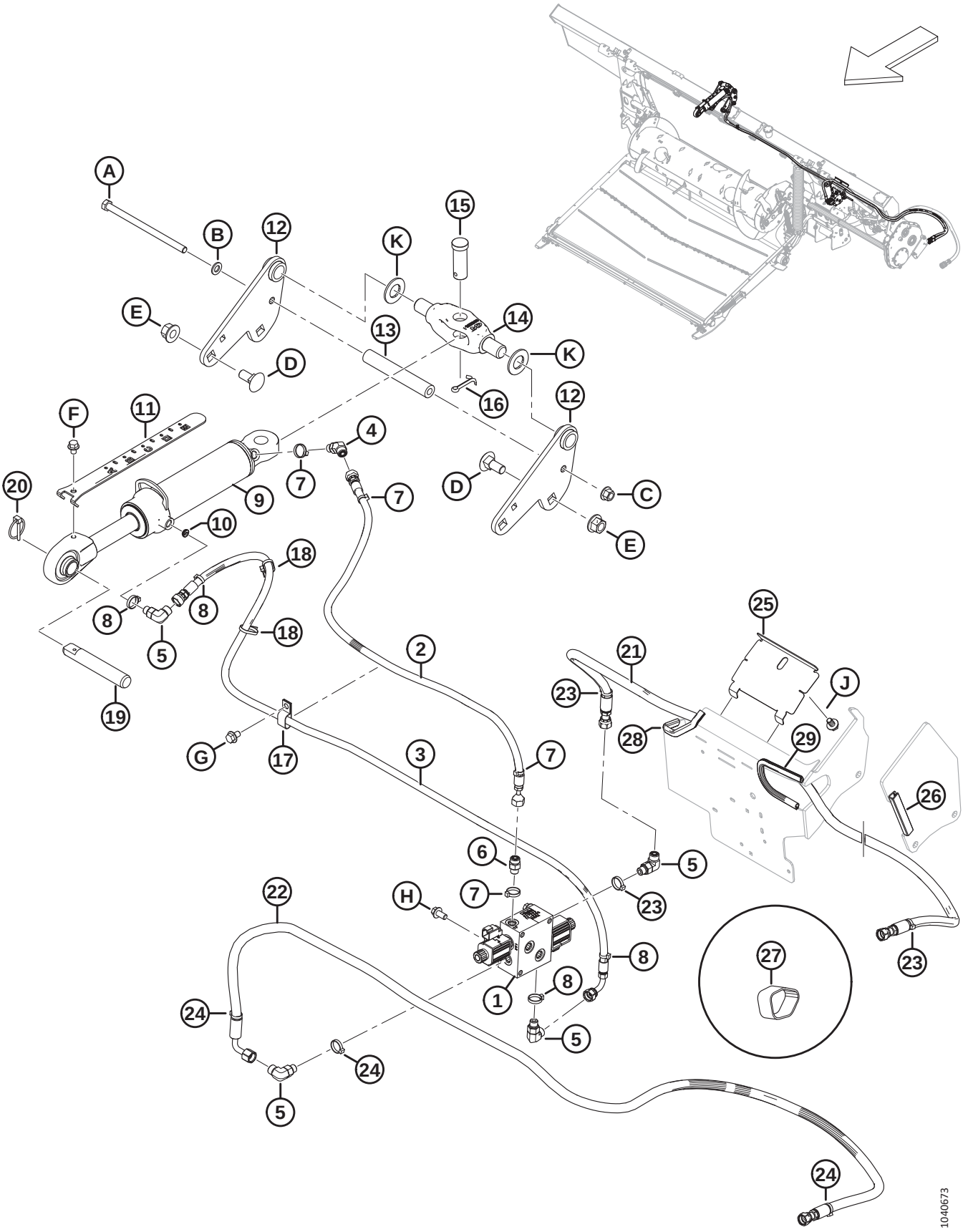

Ref	Part Number	Description	Qty	Serial Number
1	322022	MANIFOLD – SELECTOR VALVE (SV) [778]	1	
	213363	MANIFOLD – SELECTOR VALVE (SV) [779]		
	287449	COIL – 12VDC - .625IN		
	287450	VALVE – POPPET		
	287451	SEAL KIT		
2	314417	HOSE – HYD, TILT FORE	1	
3	314416	HOSE – HYD, TILT AFT	1	
4	136144	FITTING – ELBOW 45° HYD	1	
	135865	O-RING – Ø1.78 X Ø9.25		
	50219	O-RING – Ø1.98 X Ø11.89		
5	136095	FITTING – ELBOW 90° HYD	3	
	135865	O-RING – Ø1.78 X Ø9.25		
	50219	O-RING – Ø1.98 X Ø11.89		
6	135778	FITTING – ADAPTER	1	
	135865	O-RING – Ø1.78 X Ø9.25		
	50219	O-RING – Ø1.98 X Ø11.89		
7	40703	FASTENER – CABLE TIE, BLUE	4	
8	40704	FASTENER – CABLE TIE, ORANGE	4	
9	308658	CYLINDER – TOP LINK, 193 STROKE	1	
	123978	SEAL KIT		
10	252692	RESTRICTOR – #6 ORB X.035 IN.	1	
11	314292	INDICATOR – TILT, 193 STROKE	1	
12	314645	WELDMENT – TOP LINK ANCHOR	2	
13	301318	TUBE – SPACER	1	
14	187660	PIVOT – MACHINING	1	
15	135995	PIN – CLEVIS	1	
16	18609	PIN – COTTER 1/4 DIA X 2 ZP	1	
17	135234	CLAMP – DOUBLE HOSE INSULATED	1	
18	21763	FASTENER – CABLE TIE, BLACK	2	
19	313734	PIN – CENTER LINK	1	
20	102264	PIN – LYNCH 3/16 X 1 9/16 IN	1	
21	314397	HOSE – HYD, REEL FORE	1	
22	314399	HOSE – HYD, REEL AFT	1	
23	49227	FASTENER – CABLE TIE, GREEN	3	
24	40702	FASTENER – CABLE TIE, RED	3	
25	347949	PANEL – HOSE HOLDER	1	
26	254183	SEAL – EDGE TRIM [780]	**A/R**	

778. The manifold includes selector valve manifold (MD #213363), one adapter fitting (MD #135778), three 90° elbow fittings (MD #136095), blue fastener (MD #40703), orange fastener (MD #40704), red fastener (MD #40702), and green fastener (MD #49227).
779. The manifold includes two poppet valves (MD #287450) and two coils (MD #287449).
780. Edge trim seal (MD #254183) is a service part only for units with older float module frames as shown in the illustration.

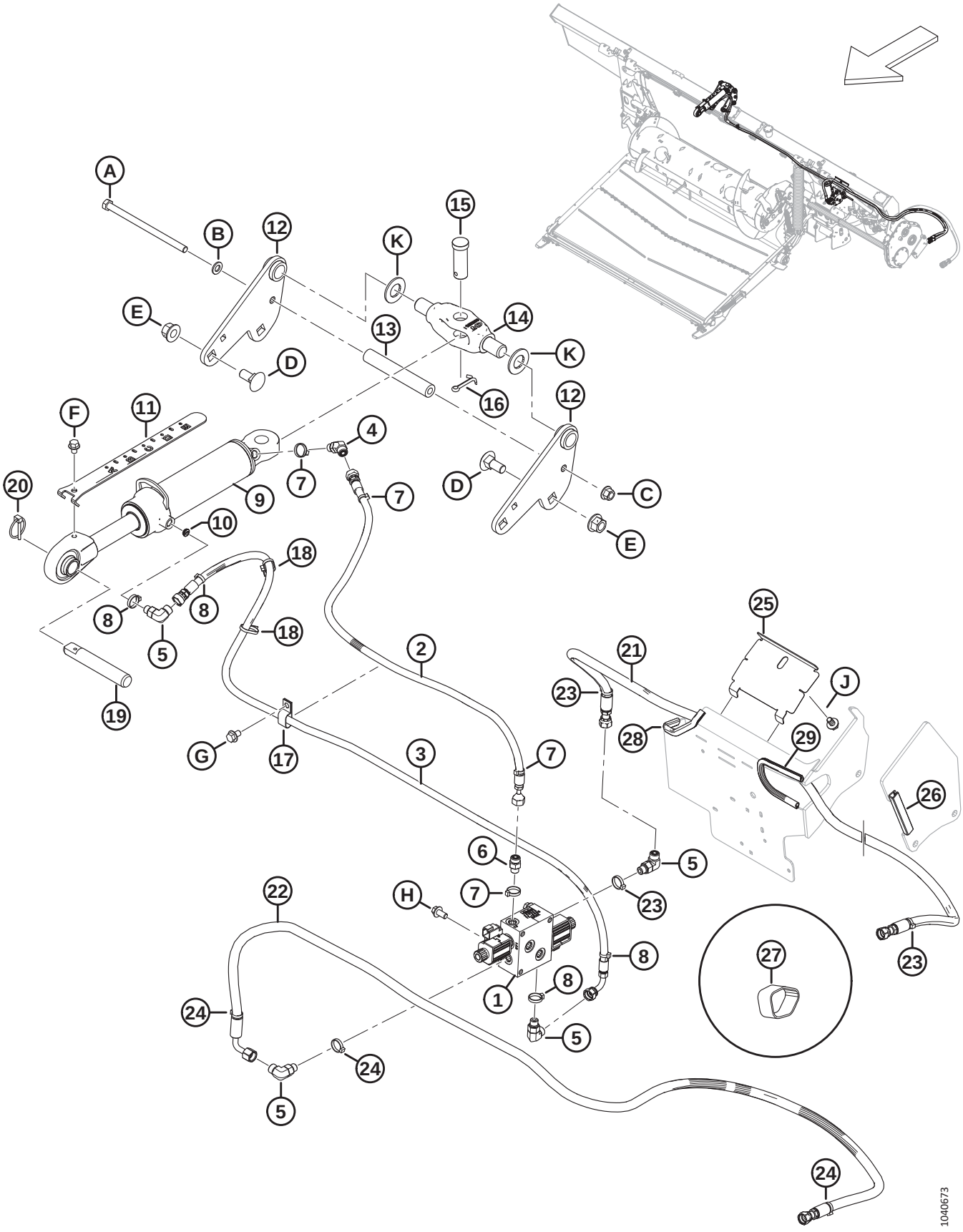
A
B
12
K
15
E
13
14
K
D
16
12
F
11
4
7
20
9
7
D
C
10
E
18
8
8
5
18
19
2
25
21
J
23
28
29
G
17
3
7
26
6
5
7
H
23
22
8
1
8
27
23
24
5
24
5
24
1040673

Ref	Part Number	Description	Qty	Serial Number
27	295927	CINCH STRAP – 8 IN. LG [781]	1	
28	133136	MOULDING	1	
29	45427	MOULDING – RH	1	
A	152395	BOLT – HEX HD M12 X 1.75 X 200-10.9-AA3L		
B	184714	WASHER – FLAT REG M12-300HV		
C	136431	NUT – HEX FLG CTR LOC M12 X 1.75-10		
D	136755	BOLT – RHSN M16 X 2 X 40-8.8-AA1J		
E	136440	NUT – HEX FLG CTR LK M16 X 2-10-AA1J		
F	30693	BOLT – HEX FLG HD SER 3/8-16 X .5 GR 5 - AA1J		
G	136151	BOLT – HEX FLG HD TFL M10 X 1.5 X 16-8.8-AA1J		
H	152655	BOLT – HEX FLG HD M10 X 1.5 X 20-8.8-AA1J		
J	136151	BOLT – HEX FLG HD TFL M10 X 1.5 X 16-8.8-AA1J		
K	18603	WASHER – FLAT SAE 1 1/16 ID X 2.0 IN OD AA1J [782]		

781. The cinch strap is used to protect reel fore-aft hoses (MD #314397, MD #314399).
782. Also used at the header end of the center-link on some model year 2022 and prior headers.

187 Hydraulics – Feed Deck (Integrated Hydraulic System)

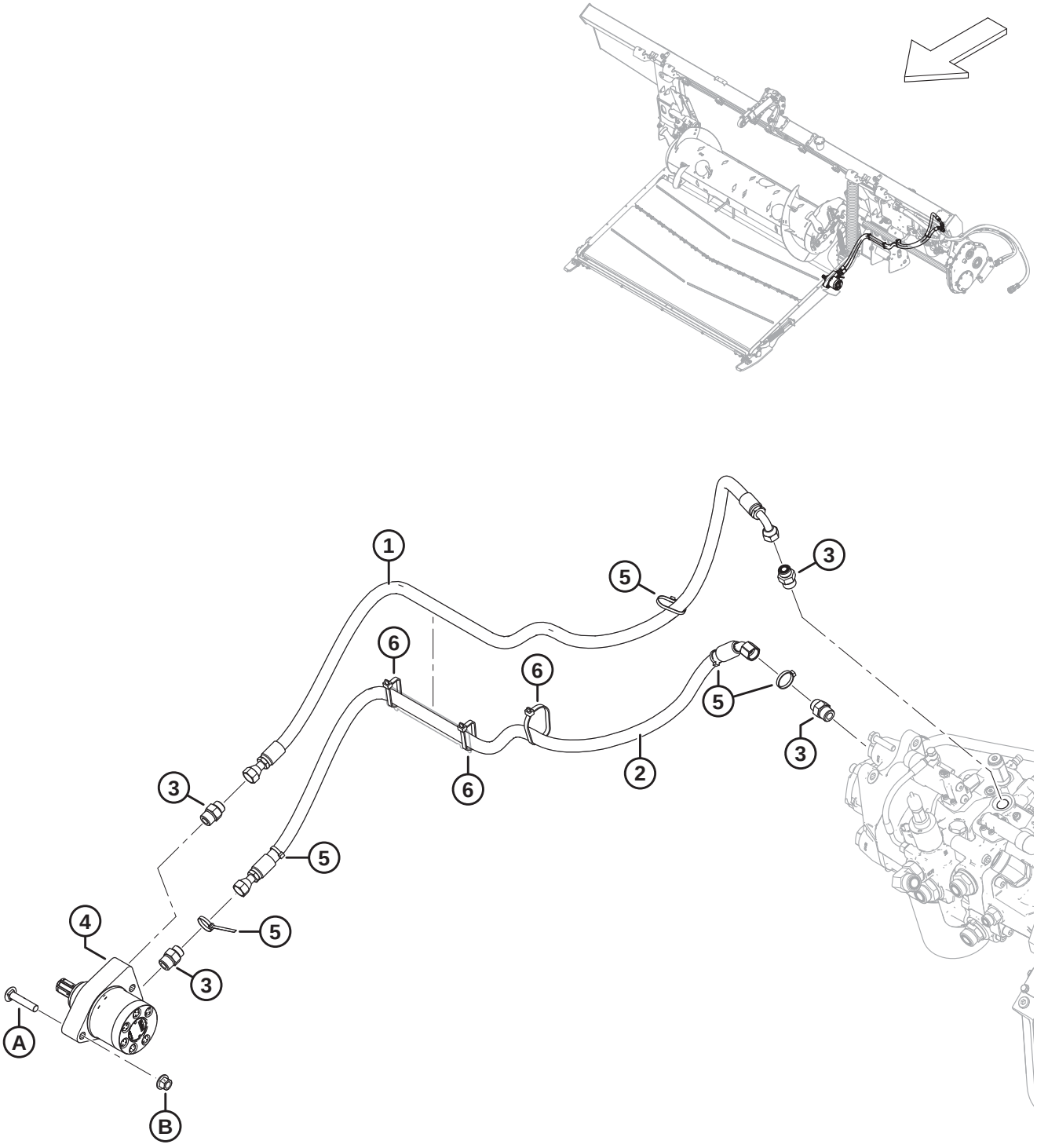

Ref	Part Number	Description	Qty	Serial Number
1	314396	HOSE – HYD, FEED DRAPER RETURN	1	
2	314395	HOSE – HYD, FEED DRAPER PRESSURE	1	
3	184463	FITTING – ADAPTER HYD	4	
4	295853	MOTOR – HYD (FEED DECK)	1	
	245316	SEAL KIT		
5	21763	FASTENER – CABLE TIE, BLACK 160 MM LG	5	
6	30753	FASTENER – CABLE TIE, BLACK 305 MM LG	3	
A	136308	BOLT – RHSSN M12 X 1.75 X 60-8.8-ZINC		
B	136431	NUT – HEX FLG CTR LOC M12 X 1.75-10		

188 Hydraulics – Suction and Return (Integrated Hydraulic System)

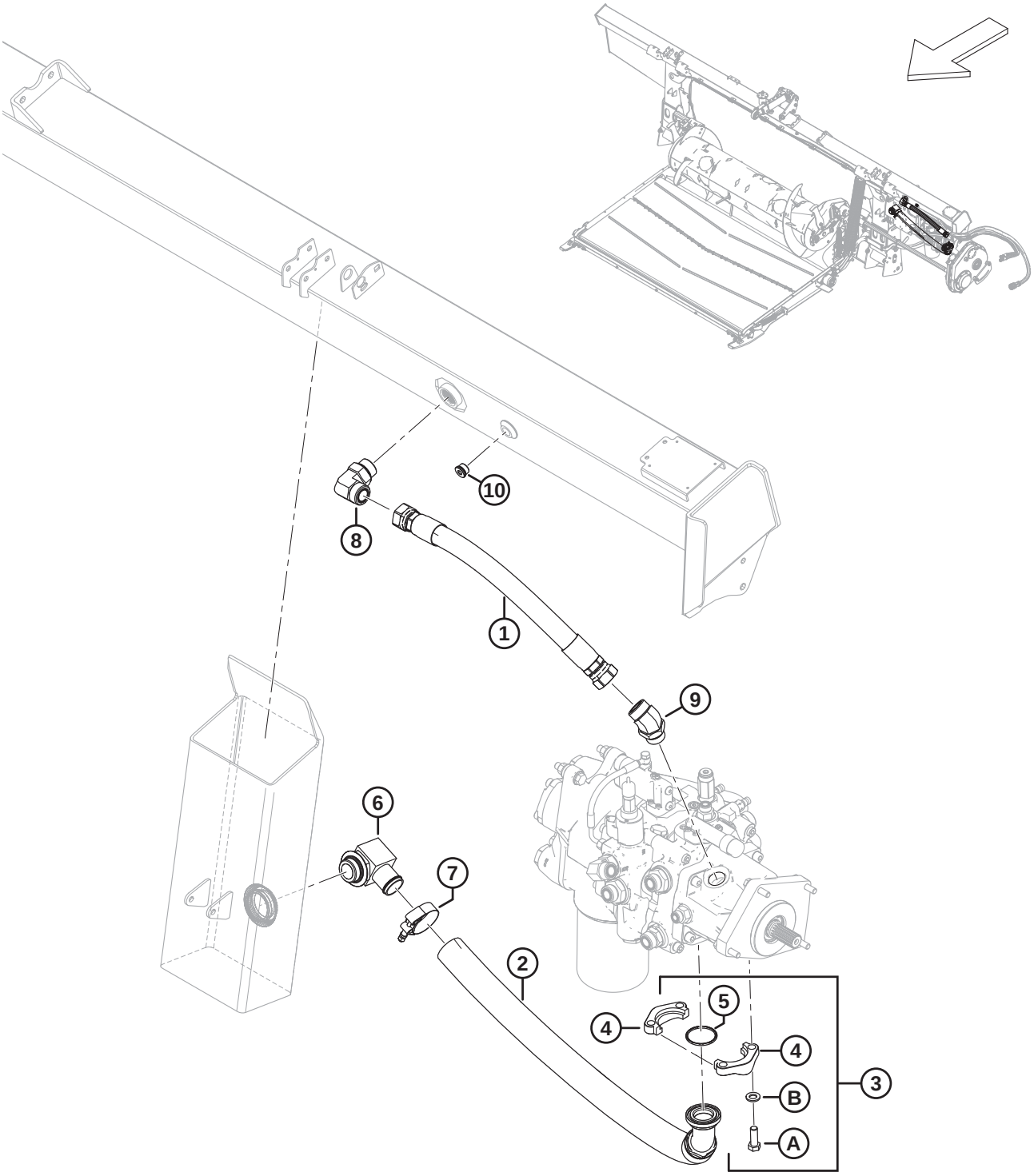

1044277

Ref	Part Number	Description	Qty	Serial Number
1	314402	HOSE – HYD, RETURN	1	
2	314389	HOSE – HYD, SUCTION	1	
3	314537	KIT – SPLIT FLANGE, 1.5 IN. CD61-1 [783]	1	
4	136106	FLANGE – HALF SPLIT 1.5 IN.	2	
5	135400	O-RING – 3.53 X 47.22	1	
6	111545	FITTING – ELBOW HYD HOSE ADAPTER	1	
7	245753	CLAMP – T BOLT	1	
8	135734	FITTING – ELBOW 90° HYD	1	
	50220	O-RING – Ø2.95 X Ø29.74		
	135554	O-RING – 1.78 X 23.52		
9	252814	FITTING – ELBOW 45° HYD	1	
	135554	O-RING – 1.78 X 23.52		
	50220	O-RING – Ø2.95 X Ø29.74		
10	**158174**	**FITTING – PLUG HYD 8 ORB HEX SOC** [784]	**1**	
	44209	**O-RING – 2.21 X 16.36**		
A	152730	BOLT – HEX HD TFL M12 X 1.75 X 35-10.9-AA1J		
B	184714	WASHER – FLAT REG M12-300HV		

783. The kit includes two 1.5 inch half split flange (MD #136106), O-ring (MD #135400), four bolts (MD #152730), and four washers (MD #184714).

784. Plug fitting (MD #158174) is used only for units with newer float module frames as shown in the illustration.

189 Hydraulics – Feed Deck (Modular Hydraulic System)

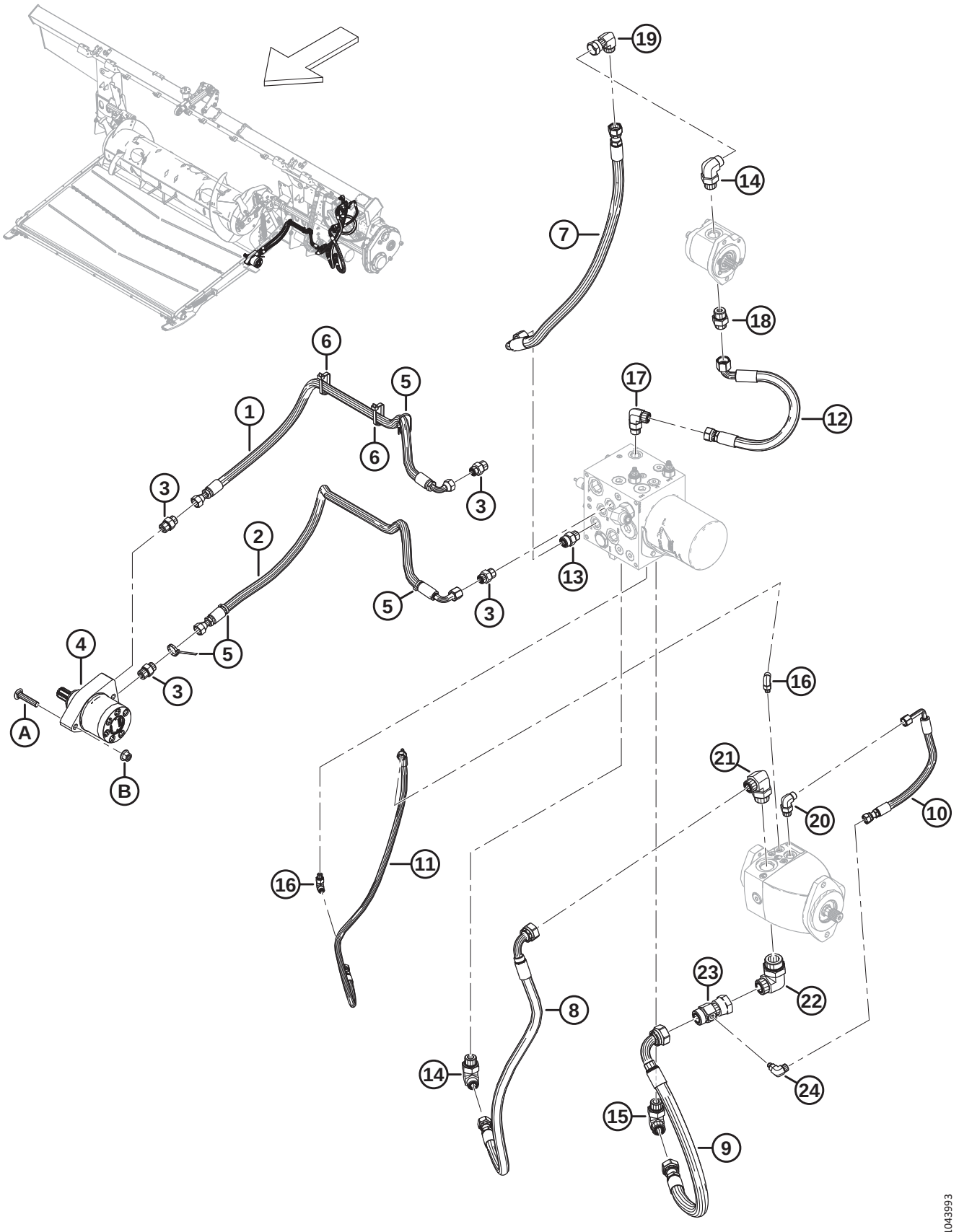

Ref	Part Number	Description	Qty	Serial Number
1	368675	HOSE – HYD, FEED DECK (1170 MM LG) [785]	1	
2	368674	HOSE – HYD, FEED DECK (1150 MM LG) [786]	1	
3	184463	FITTING – ADAPTER HYD	4	
4	295853	MOTOR – HYD (FEED DECK)	1	
	245316	SEAL KIT		
5	21763	FASTENER – CABLE TIE, BLACK 160 MM LG	4	
6	30753	FASTENER – CABLE TIE, BLACK 305 MM LG	2	
7	368677	HOSE – HYD	1	
8	368678	HOSE – HYD, DRAPER PRESSURE	1	
9	369679	HOSE – HYD, DRAPER RETURN	1	
10	368684	HOSE – HYD	1	
11	368685	HOSE – HYD	1	
12	368686	HOSE – HYD	1	
13	184461	FITTING – ADAPTER HYD	1	
	44210	O-RING – 2.46 X 19.18		
	135867	O-RING – 1.78 X 15.60		
14	136347	FITTING – ELBOW 90° HYD	2	
	30971	O-RING – 2.95 X 23.47		
	135867	O-RING – 1.78 X 15.60		
15	135821	FITTING – ELBOW 90° HYD	1	
	30971	O-RING – 2.95 X 23.47		
	135868	O-RING – 1.78 X 18.77		
16	136447	FITTING – ELBOW 90° HYD	2	
	50223	O-RING – 1.83 X 8.92		
	135957	O-RING – 1.78 X 7.65		
17	136089	FITTING – ELBOW 90° HYD	1	
	44210	O-RING – 2.46 X 19.18		
	135867	O-RING – 1.78 X 15.60		
18	135786	FITTING – ADAPTER	1	
	30971	O-RING – 2.95 X 23.47		
	135867	O-RING – 1.78 X 15.60		
19	136846	FITTING – ELBOW 90° HYD	1	
	135867	O-RING – 1.78 X 15.60		
20	136149	FITTING – ELBOW 90°HYD	1	
	44209	O-RING – 2.21 X 16.36		
	135865	O-RING – 1.78 X 9.25		
21	135901	FITTING – ELBOW 90° HYD	1	
	50220	O-RING – 2.95 X 29.74		
	135868	O-RING – 1.78 X 18.77		
22	136766	FITTING – ELBOW 90° HYD	1	
	50222	O-RING – 3.00 X 37.47		
	135554	O-RING – 1.78 X 23.52		

785. 1170 mm long.
786. 1150 mm long.

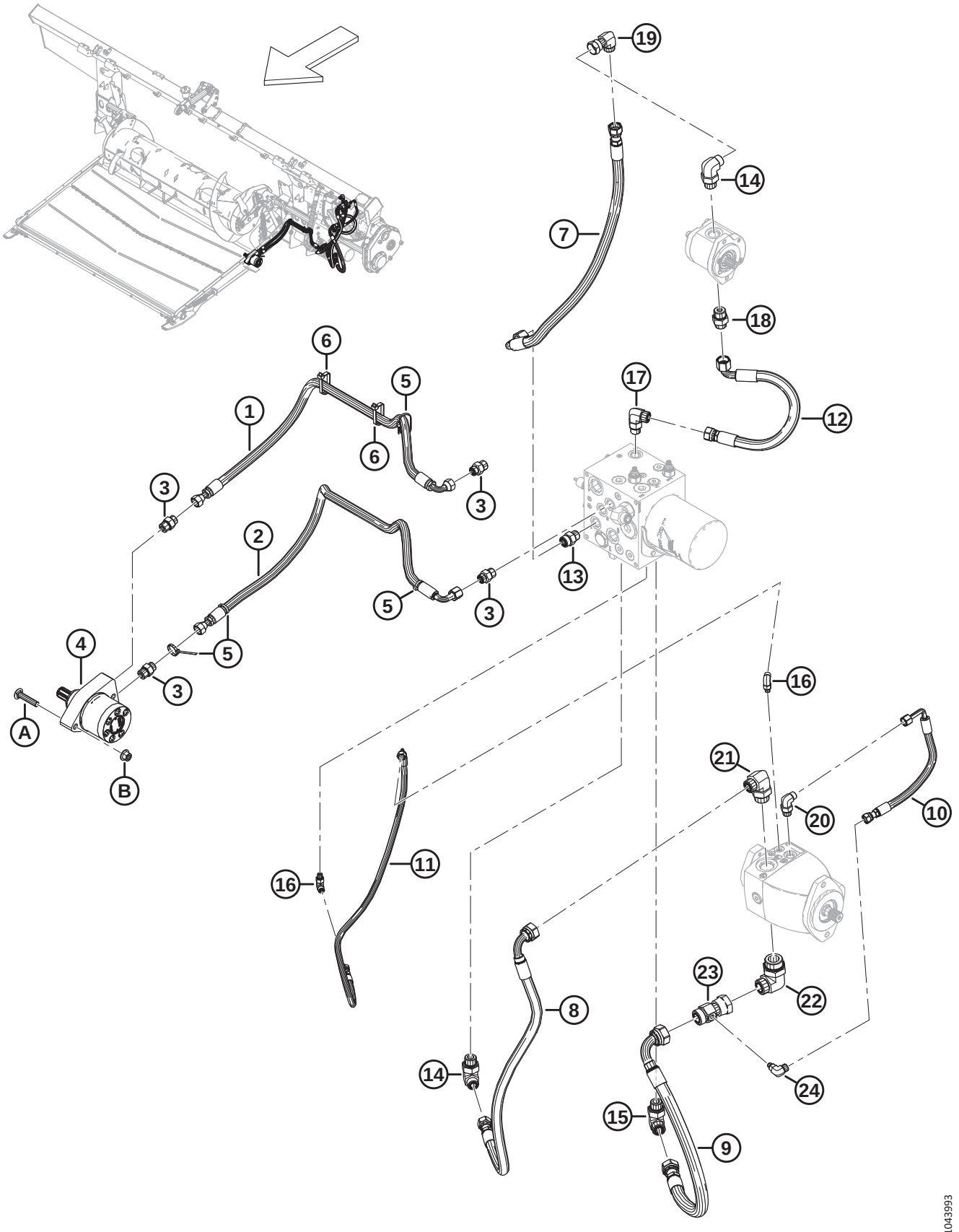
19
14
7
18
6
5
17
12
1
6
3
3
2
13
5
3
4
5
3
16
A
21
20
10
B
16
11
8
14
23
22
24
15
9
1043993

Ref	Part Number	Description	Qty	Serial Number
23	252554	FITTING – TEE HYD, GAUGE PORT	1	
	135868	O-RING – 1.78 X 18.77		
24	136337	FITTING – ELBOW 90° HYD	1	
	50223	O-RING – 1.83 X 8.92		
	135865	O-RING – 1.78 X 9.25		
A	136308	BOLT – RHSSN M12 X 1.75 X 60-8.8-ZINC		
B	136431	NUT – HEX FLG CTR LOC M12 X 1.75-10		

190 Hydraulics – Suction and Return (Modular Hydraulic System)

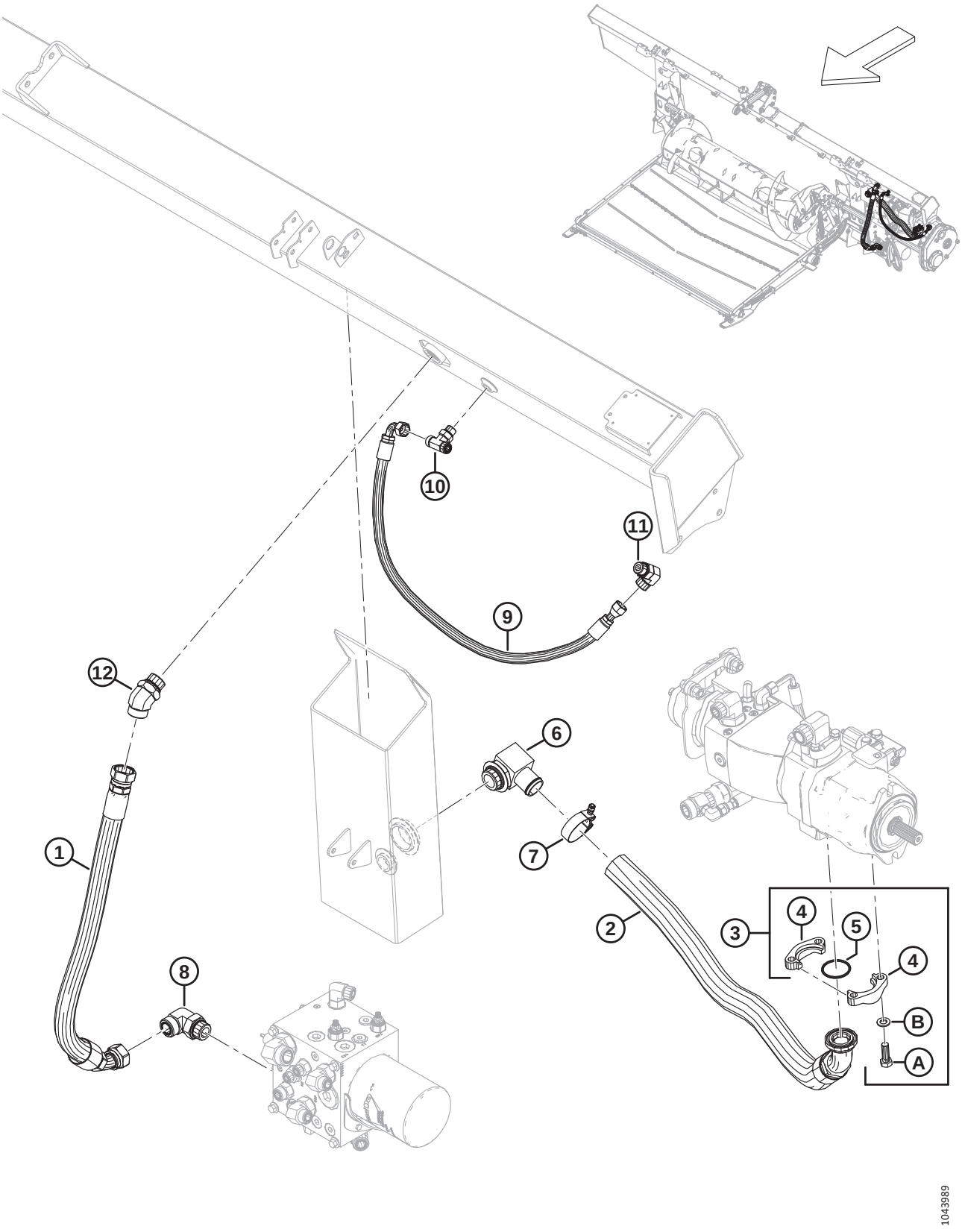

Ref	Part Number	Description	Qty	Serial Number
1	368673	HOSE – HYD	1	
2	314389	HOSE – HYD, SUCTION	1	
3	136246	KIT – SPLIT FLANGE, 1.5 IN. CD61-1 [787]	1	
4	136106	FLANGE – HALF SPLIT 1.5 IN.	2	
5	135400	O-RING – 3.53 X 47.22	1	
6	111545	FITTING – ELBOW HYD HOSE ADAPTER	1	
	136483	O-RING – 3 X 43.69		
7	245753	CLAMP – T BOLT	1	
8	135734	FITTING – ELBOW 90° HYD	1	
	50220	O-RING – 2.95 X 29.74		
	135554	O-RING – 1.78 X 23.52		
9	378372	HOSE – HYD, KNIFE CASE DRAIN	1	
10	136684	FITTING – TEE HYD	1	
	44209	O-RING – 2.21 X 16.36		
	135866	O-RING – 1.78 X 12.42		
11	136089	FITTING – ELBOW 90° HYD	1	
	44210	O-RING – 2.46 X 19.18		
	135867	O-RING – 1.78 X 15.60		
12	252814	FITTING – ELBOW 45° HYD	1	
	50220	O-RING – 2.95 X 29.74		
	135554	O-RING – 1.78 X 23.52		
A	252641	BOLT – HEX HD 1/2-13 X 1.5-GR8-AA3L		
B	184714	WASHER – FLAT REG M12-300HV		

787. The kit includes two 1.5 inch half split flange (MD #136106), O-ring (MD #135400), four bolts (MD #252641), and four washers (MD #184714).

191 Hydraulics – Drives and Float Module Manifold (Modular Hydraulic System)

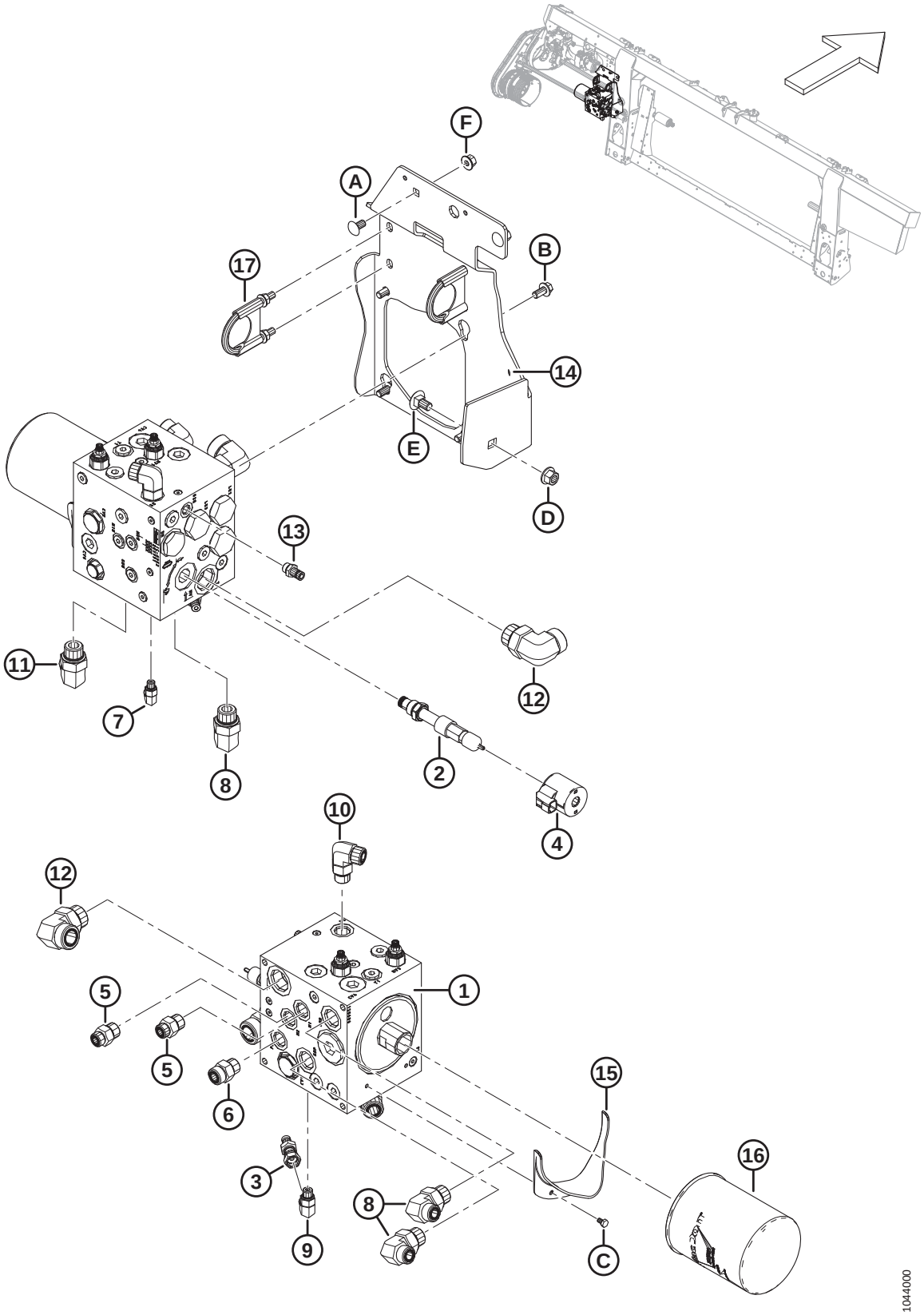

Ref	Part Number	Description	Qty	Serial Number
1	287771	ASSEMBLY – MANIFOLD, DRIVE [788]	1	
2	276631	VALVE – FLOW CONTROL	1	
	220908	SEAL KIT		
3	252662	FITTING – NIPPLE HYD	1	
4	209045	COIL – SOLENOID	1	
5	184463	FITTING – ADAPTER HYD	2	
	44210	O-RING – 2.46 X 19.18		
	135866	O-RING – 1.78 X 12.42		
6	184461	FITTING – ADAPTER HYD	1	
	44210	O-RING – 2.46 X 19.18		
	135867	O-RING – 1.78 X 15.60		
7	136447	FITTING – ELBOW 90° HYD	1	
	50223	O-RING – 1.83 X 8.92		
	135957	O-RING – 1.78 X 7.65		
8	136347	FITTING – ELBOW 90° HYD	3	
	135867	O-RING – 1.78 X 15.60		
	30971	O-RING – 2.95 X 23.47		
9	136095	FITTING – ELBOW 90° HYD	1	
	135865	O-RING – 1.78 X 9.25		
	50219	O-RING – 1.98 X 11.89		
10	136089	FITTING – ELBOW 90° HYD	1	
	44210	O-RING – 2.46 X 19.18		
	135867	O-RING – 1.78 X 15.60		
11	135821	FITTING – ELBOW 90° HYD	1	
	30971	O-RING – 2.95 X 23.47		
	135868	O-RING – 1.78 X 18.77		
12	135734	FITTING – ELBOW 90° HYD	2	
	50220	O-RING – 2.95 X 29.74		
	135554	O-RING – 1.78 X 23.52		
13	135587	NIPPLE – HYDRAULIC	1	
	50219	O-RING – 1.98 X 11.89		
14	323996	BRACKET – MANIFOLD SUPPORT	1	
15	213743	FLANGE – OIL DRAIN SPOUT	1	
16	320360	FILTER – HYD C/W 2X SEALS	1	
17	136109	CLAMP – U-BOLT [789]	2	
	287702	DECAL – FLOAT LOCK, LH [790]	1	
A	184657	BOLT – RHSSN M10 X 1.5 X 20-8.8-AA1J		
B	152655	BOLT – HEX FLG HD M10 X 1.5 X 20-8.8-AA1J		
C	136561	BOLT – HEX HD TFL M6 X 1 X 10-8.8-AA1J		
D	136431	NUT – HEX FLG CTR LOC M12 X 1.75-10		

788. For service parts, refer to Section *192 Hydraulics – Drive Manifold Assembly, Service Parts (Modular Hydraulic System), page 485*.
789. Includes two lock nuts.
790. This decal is attached to the manifold support bracket. For float module decals, refer to Section *200 Decals and Reflectors – FM200, page 505*.

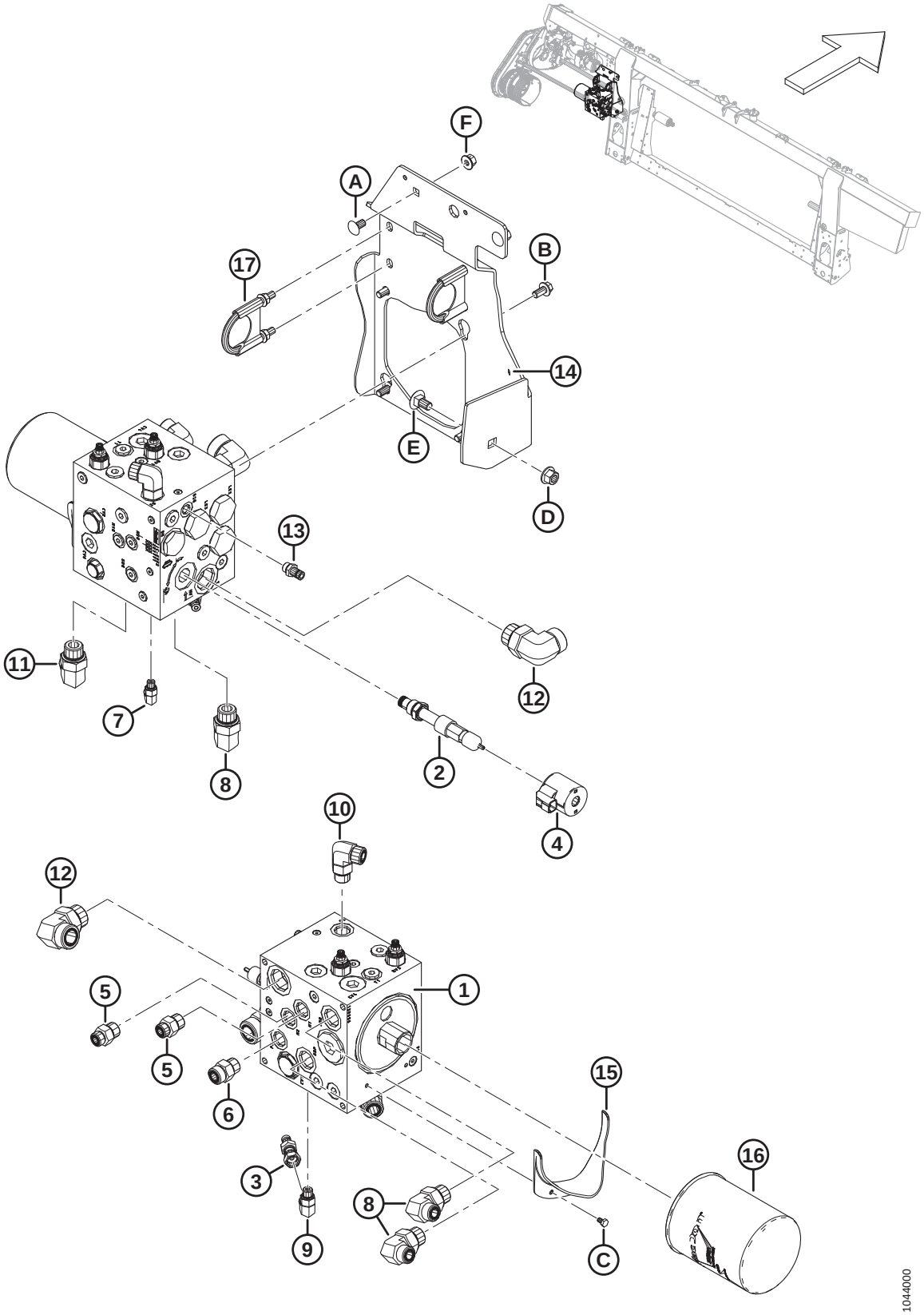
F
A
17
B
14
E
D
13
11
12
7
8
2
4
10
12
5
5
1
6
15
16
3
8
9
C
1044000

Ref	Part Number	Description	Qty	Serial Number
E	**135903**	**BOLT – RHSN M12 X 1.75 X 25-8.8-ZINC**		
F	**135799**	**NUT – HEX FLG CTR LOC M10 X 1.5-10**		

192 Hydraulics – Drive Manifold Assembly, Service Parts (Modular Hydraulic System)

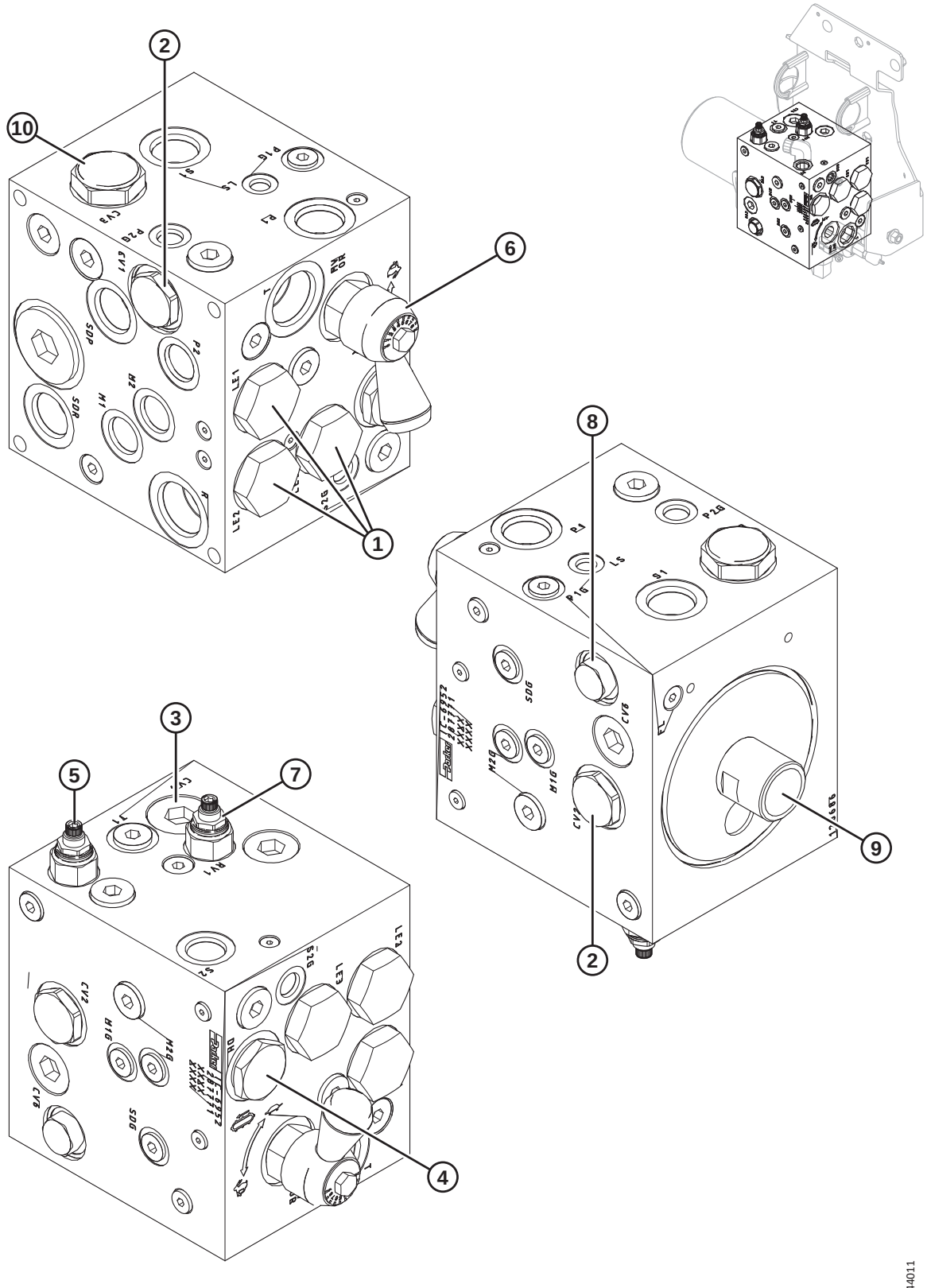

Ref	Part Number	Description	Qty	Serial Number
	287771	**ASSEMBLY – MANIFOLD, DRIVE** [791]		
1	**287466**	**VALVE – LOGIC ELEMENT-16 (LE1, LE2, LE3)** [792]	**3**	
	220963	**SEAL KIT**		
2	**287467**	**VALVE – VENTED CHECK-12 (CV1, CV2)** [793]	**2**	
	220965	**SEAL KIT**		
3	**287468**	**VALVE – BYPASS, 25 PSI (CV4)** [794]	**1**	
4	**287469**	**VALVE – DIVERTER (DH)** [795]	**1**	
	287473	**SEAL KIT**		
5	**220951**	**VALVE – P.O. RELIEF, 2500 PSI (RV2)** [796]	1	
	220960	**SEAL KIT**		
6	**287470**	**VALVE – NEEDLE (MVOR)** [797]	**1**	
	287193	**HANDLE – FLOW CONTROL** [797]		
	220960	**SEAL KIT**		
7	**287613**	**VALVE – RELIEF, 1500 PSI (RV1)** [798]	**1**	
	220960	**SEAL KIT**		
8	**287471**	**VALVE – CHECK-08 (CV6)** [799]	**1**	
	220965	**SEAL KIT**		
9	**245160**	**FITTING – FILTER ADAPTER**	**1**	
10	**287472**	**VALVE – CHECK REG-16, 8 PSI (CV3)** [800]	**1**	
	220961	**SEAL KIT**		

791. Refer to Section *191 Hydraulics – Drives and Float Module Manifold (Modular Hydraulic System), page 481*.
792. Valve connects to ports LE1, LE2, and LE3.
793. Valve connects to ports CV1 and CV2.
794. Bypass valve (MD #287468) is located underneath plug. Valve connects to port CV4.
795. Valve connects to port DH.
796. Valve connects to port RV2.
797. The needle valve / flow control handle is not used with FM200 Float Modules; remove the needle valve / flow control handle before installing a replacement manifold.
798. Valve connects to port RV1.
799. Valve connects to port CV6.
800. Valve connects to port CV3.

193 Hydraulics – Double Reel, Float Module to Header Manifold (Integrated Hydraulic System)

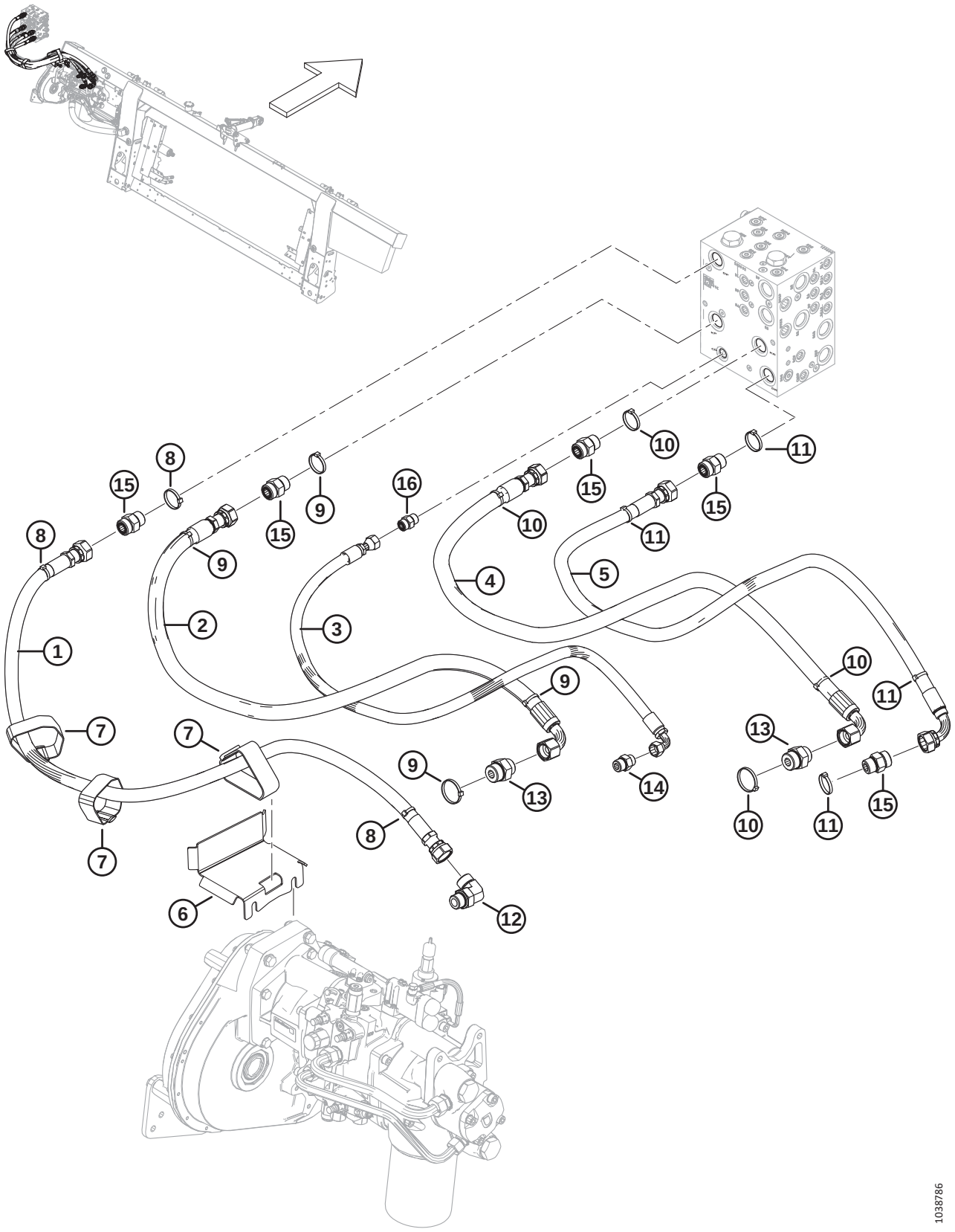

Ref	Part Number	Description	Qty	Serial Number
1	322256	HOSE – HYD, SDP	1	
2	314391	HOSE – HYD, KP	1	
3	314401	HOSE – HYD, CD	1	
4	314392	HOSE – HYD, KR	1	
5	314394	HOSE – HYD, SDR	1	
6	335887	HOLDER – HOSE	1	
7	347979	CINCH STRAP – 16 IN. LG	3	
8	49227	FASTENER – CABLE TIE, GREEN	3	
9	40704	FASTENER – CABLE TIE, ORANGE	4	
10	40703	FASTENER – CABLE TIE, BLUE	4	
11	40702	FASTENER – CABLE TIE, RED	4	
12	135821	FITTING – ELBOW 90° HYD	1	
	30971	O-RING – Ø2.95 X Ø23.47		
	135868	O-RING – Ø1.78 X Ø18.77		
13	135789	FITTING – ADAPTER	2	
	50220	O-RING – Ø2.95 X Ø29.74		
	135868	O-RING – Ø1.78 X Ø18.77		
14	184463	FITTING – ADAPTER HYD	1	
	44210	O-RING – Ø2.46 X Ø19.18		
	135866	O-RING – Ø1.78 X Ø12.42		
15	135788	FITTING – ADAPTER	5	
	30971	O-RING – Ø2.95 X Ø23.47		
	135868	O-RING – Ø1.78 X Ø18.77		
16	135780	FITTING – ADAPTER	1	
	44209	O-RING – Ø2.21 X Ø16.36		
	135866	O-RING – Ø1.78 X Ø12.42		

194 Hydraulics – Triple Reel, Float Module to Header Manifold (Integrated Hydraulic System)

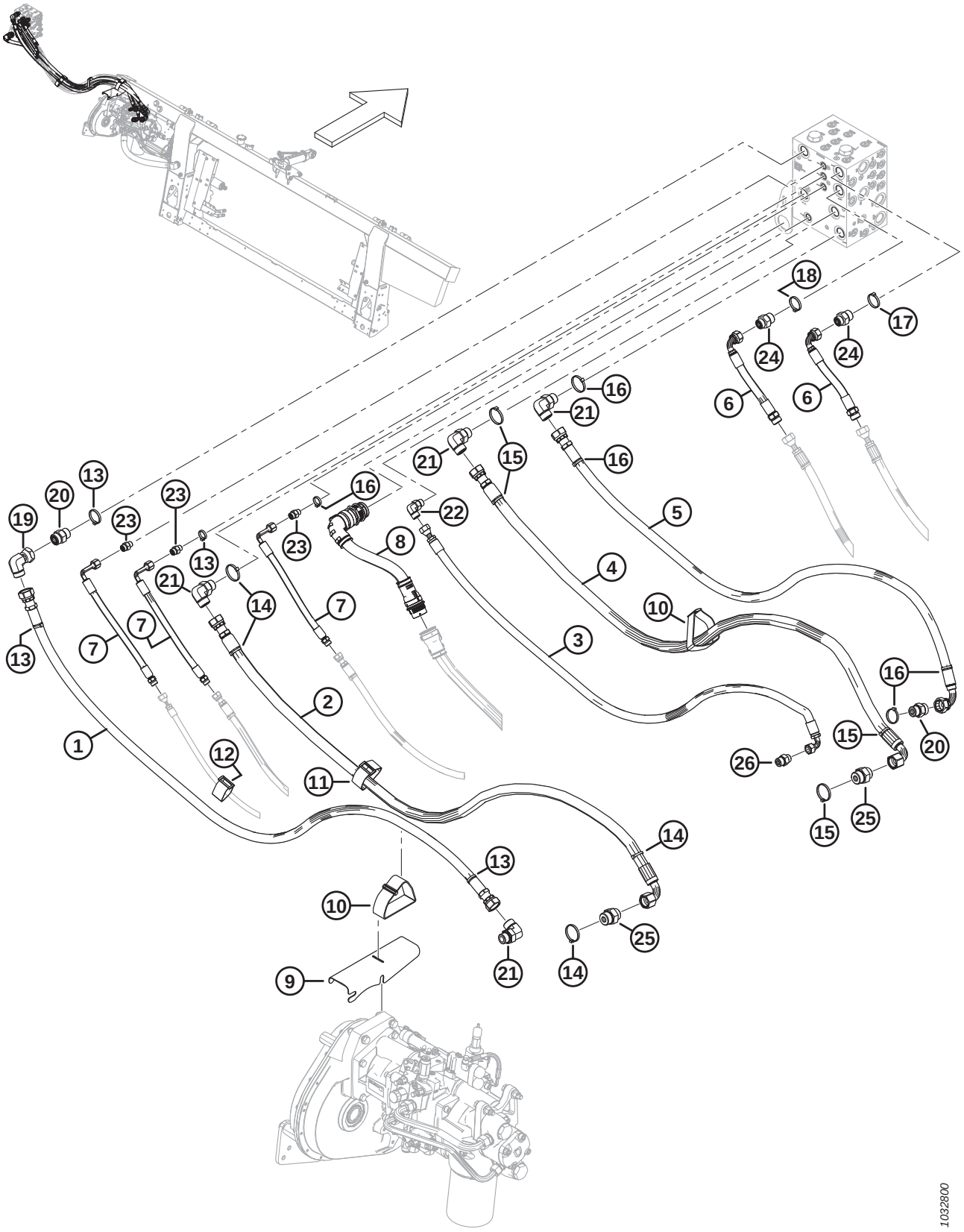

Ref	Part Number	Description	Qty	Serial Number
1	314593	HOSE – HYD, SDP WIDE	1	
2	314591	HOSE – HYD, KP WIDE	1	
3	314595	HOSE – HYD, CD WIDE	1	
4	314592	HOSE – HYD, KR WIDE	1	
5	314594	HOSE – HYD, SDR WIDE	1	
6	314606	HOSE – HYD, REEL DRIVE EXT	2	
7	314605	HOSE – HYD, REEL F/A/L EXT	3	
8	335133	HARNESS – WIDE FRAME EXT	1	
9	314697	SUPPORT – HOSE	1	
10	347979	CINCH STRAP – 16 IN. LG	2	
11	295927	CINCH STRAP – 8 IN. LG	1	
12	135444	CINCH STRAP – 6 IN. LG	1	
13	49227	FASTENER – CABLE TIE, GREEN	4	
14	40704	FASTENER – CABLE TIE, ORANGE	2	
15	40703	FASTENER – CABLE TIE, BLUE	2	
16	40702	FASTENER – CABLE TIE, RED	5	
17	49232	FASTENER – CABLE TIE, WHITE	1	
18	40701	FASTENER – CABLE TIE, YELLOW	1	
19	135888	FITTING – ELBOW 90° HYD	1	
	135868	O-RING – Ø1.78 X Ø18.77		
20	135788	FITTING – ADAPTER	2	
	30971	O-RING – Ø2.95 X Ø23.47		
	135868	O-RING – Ø1.78 X Ø18.77		
21	135821	FITTING – ELBOW 90° HYD	4	
	30971	O-RING – Ø2.95 X Ø23.47		
	135868	O-RING – Ø1.78 X Ø18.77		
22	136220	FITTING – ELBOW 90° HYD	1	
	44209	O-RING – Ø2.21 X Ø16.36		
	135866	O-RING – Ø1.78 X Ø12.42		
23	135778	FITTING – ADAPTER	3	
	50219	O-RING – Ø1.98 X Ø11.89		
	135865	O-RING – Ø1.78 X Ø9.25		
24	135786	FITTING – ADAPTER	2	
	30971	O-RING – Ø2.95 X Ø23.47		
	135867	O-RING – Ø1.78 X Ø15.60		
25	135789	FITTING – ADAPTER	2	
	50220	O-RING – Ø2.95 X Ø29.74		
	135868	O-RING – Ø1.78 X Ø18.77		
26	184463	FITTING – ADAPTER HYD	1	
	44210	O-RING – Ø2.46 X Ø19.18		
	135866	O-RING – Ø1.78 X Ø12.42		

195 Hydraulics – Double Reel, Float Module to Header Manifold (Modular Hydraulic System)

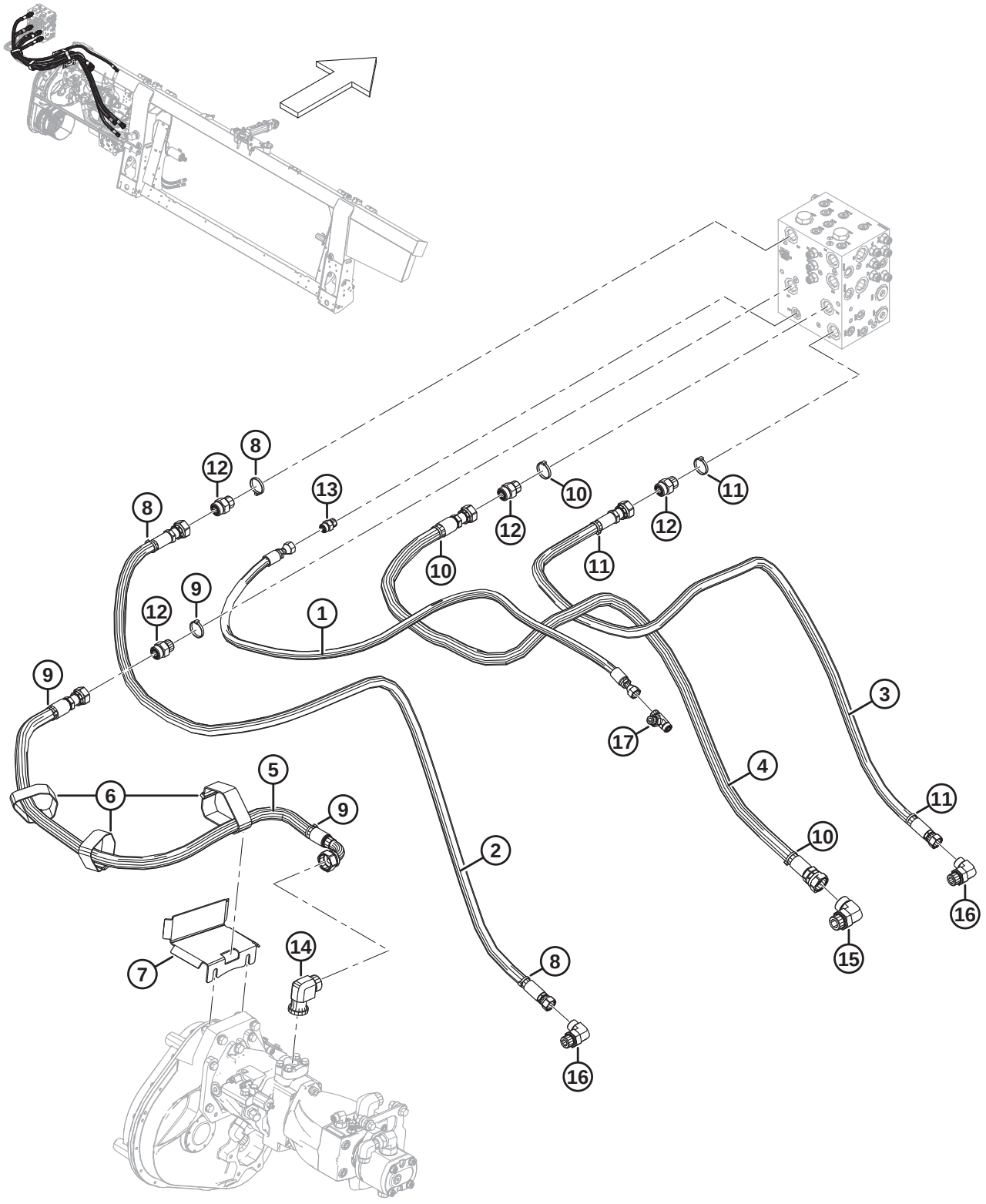

Ref	Part Number	Description	Qty	Serial Number
1	378373	HOSE – HYD, CASE DRAIN	1	
2	368692	HOSE – HYD, SDP	1	
3	368691	HOSE – HYD, SDR	1	
4	368690	HOSE – HYD, KNIFE RETURN	1	
5	368689	HOSE – HYD, KNIFE PRESSURE	1	
6	347979	CINCH STRAP – 16 IN. LG	3	
7	335887	HOLDER – HOSE	1	
8	49227	FASTENER – CABLE TIE, GREEN	3	
9	40704	FASTENER – CABLE TIE, ORANGE	3	
10	40703	FASTENER – CABLE TIE, BLUE	3	
11	40702	FASTENER – CABLE TIE, RED	3	
12	135788	FITTING – ADAPTER	4	
	30971	O-RING – 2.95 X 23.47		
	135868	O-RING – 1.78 X 18.77		
13	135780	FITTING – ADAPTER	1	
	44209	O-RING – 2.21 X 16.36		
	135866	O-RING – 1.78 X 12.42		
14	252208	FITTING – 90° 16-16 CODE61-ORFS	1	
	112868	O-RING – 3.53 X 32.92		
	135554	O-RING – 1.78 X 23.52		
15	135734	FITTING – ELBOW 90° HYD	1	
	50220	O-RING – 2.95 X 29.74		
	135554	O-RING – 1.78 X 23.52		
16	136347	FITTING – ELBOW 90° HYD	2	
	30971	O-RING – 2.95 X 23.47		
	135867	O-RING – 1.78 X 15.60		
17	136684	FITTING – TEE HYD		
	44209	O-RING – 2.21 X 16.36		
	135866	O-RING – 1.78 X 12.42		

196 Hydraulics – Triple Reel, Float Module to Header Manifold (Modular Hydraulic System)

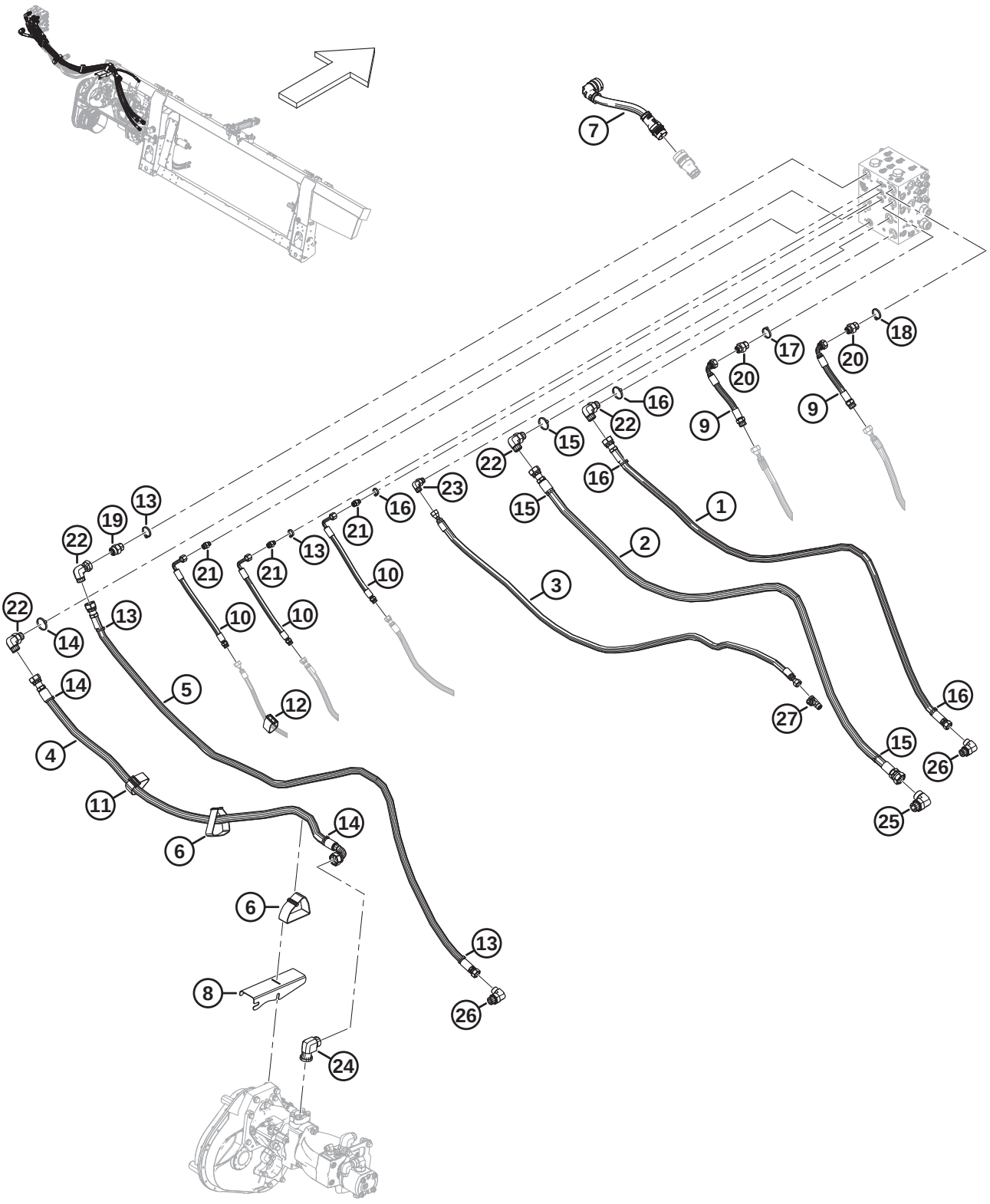

Ref	Part Number	Description	Qty	Serial Number
1	378254	HOSE – HYD, SDR	1	
2	378253	HOSE – HYD, KNIFE RETURN	1	
3	378252	HOSE – HYD, CD	1	
4	378251	HOSE – HYD, KNIFE PRESSURE	1	
5	378250	HOSE – HYD, SDP	1	
6	347979	CINCH STRAP – 16 IN. LG	2	
7	335133	HARNESS – WIDE FRAME EXT	1	
8	314697	SUPPORT – HOSE	1	
9	314606	HOSE – HYD, REEL DRIVE EXT	2	
10	314605	HOSE – HYD, REEL F/A/L EXT	3	
11	295927	CINCH STRAP – 8 IN. LG	1	
12	135444	CINCH STRAP – 6 IN. LG	1	
13	49227	FASTENER – CABLE TIE, GREEN	4	
14	40704	FASTENER – CABLE TIE, ORANGE	3	
15	40703	FASTENER – CABLE TIE, BLUE	3	
16	40702	FASTENER – CABLE TIE, RED	4	
17	40701	FASTENER – CABLE TIE, YELLOW	1	
18	49232	FASTENER – CABLE TIE, WHITE	1	
19	135788	FITTING – ADAPTER	1	
	30971	O-RING – 2.95 X 23.47		
	135868	O-RING – 1.78 X 18.77		
20	135786	FITTING – ADAPTER	2	
	30971	O-RING – 2.95 X 23.47		
	135867	O-RING – 1.78 X 15.60		
21	135778	FITTING – ADAPTER	3	
	50219	O-RING – 1.98 X 11.89		
	135865	O-RING – 1.78 X 9.25		
22	135821	FITTING – ELBOW 90° HYD	3	
	30971	O-RING – 2.95 X 23.47		
	135868	O-RING – 1.78 X 18.77		
23	136220	FITTING – ELBOW 90° HYD	1	
	44209	O-RING – 2.21 X 16.36		
	135866	O-RING – 1.78 X 12.42		
24	252208	FITTING – 90° 16-16 CODE61-ORFS	1	
	112868	O-RING – 3.53 X 32.92		
	135554	O-RING – 1.78 X 23.52		
25	135734	FITTING – ELBOW 90° HYD	1	
	50220	O-RING – 2.95 X 29.74		
	135554	O-RING – 1.78 X 23.52		
26	136347	FITTING – ELBOW 90° HYD	2	
	30971	O-RING – 2.95 X 23.47		
	135867	O-RING – 1.78 X 15.60		
27	136684	FITTING – TEE HYD		
	44209	O-RING – 2.21 X 16.36		
	135866	O-RING – 1.78 X 12.42		

197 Electrical – Base (Integrated Hydraulic System)

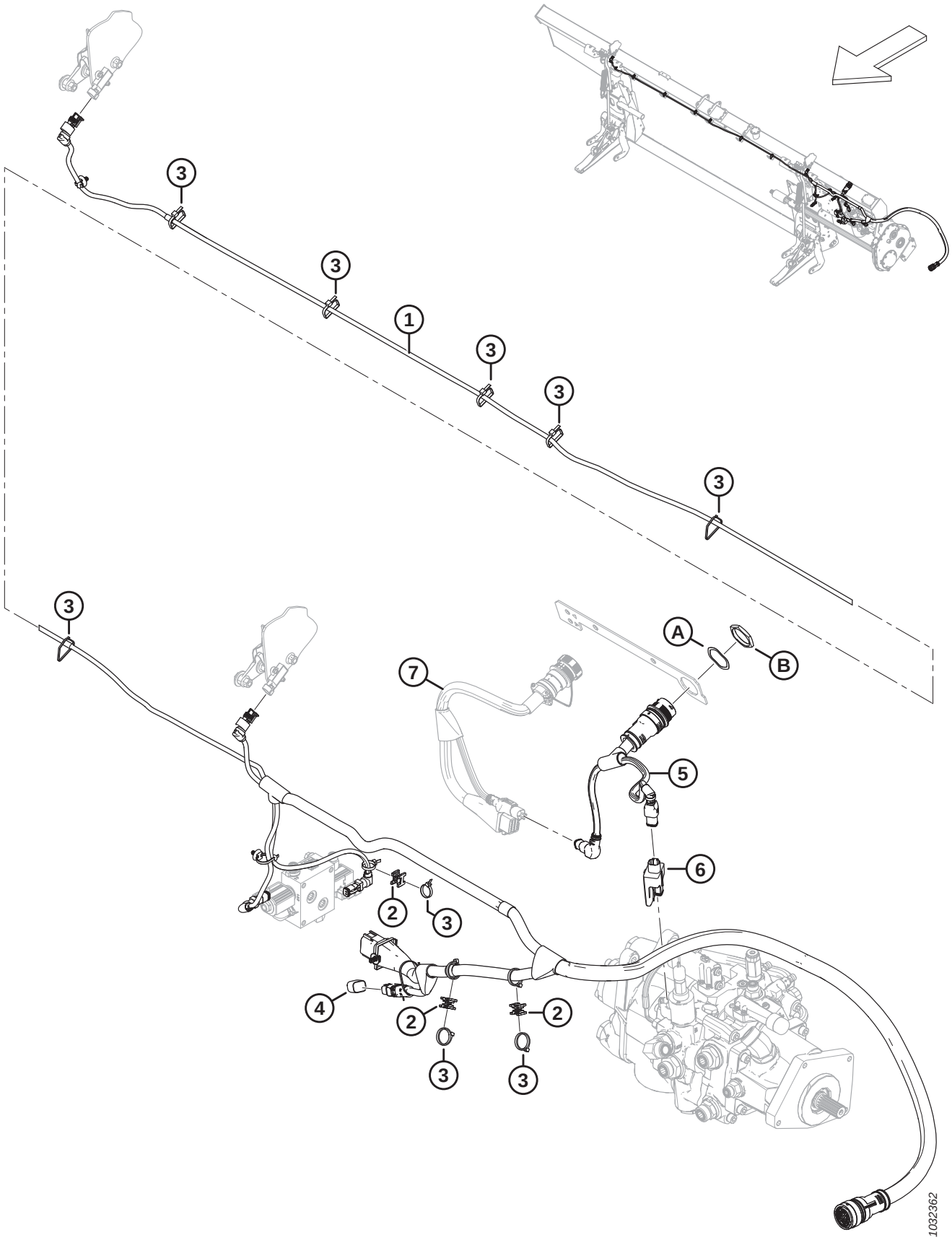

Ref	Part Number	Description	Qty	Serial Number
	B7196	KIT – LATERAL TILT PLUG [801]		
	B7489	KIT – AUTO HEADER HEIGHT PLUG [802]		
	B7490	KIT – PASS-THRU TILT PLUG [803]		
1	328089	HARNESS – MAIN [804]	1	
	136655	FASTENER – FIR TREE MT W/ TIE		
2	134442	SPACER – DUAL SWIVEL SADDLE	3	
3	21763	FASTENER – CABLE TIE, BLACK	A/R	
4	328318	PLUG – FLOAT CONFIG. 2 SENSOR (LATERAL TILT) [805]	OPT	
	328560	PLUG – FLOAT CONFIG. 1 SENSOR (AUTO HEADER HEIGHT) [805]	OPT	
	323698	PLUG – TILT, PASS-THRU [805]	OPT	
5	322383	HARNESS – FM200 ADAPTER	1	
6	328411	MODULE – VALVE DRIVER	1	
7	REF	HARNESS – COMPLETION PACKAGE [806]		
A	134730	WASHER – LOCK, HDP 20, SIZE 24		
B	134728	NUT – PANEL, HDP 20, SIZE 24		

801. The kit includes lateral tilt plug (MD #328318) and instructions. Kits are available through Whole Goods only.
802. The kit includes auto header height plug (MD #328560) and instructions. Kits are available through Whole Goods only.
803. The kit includes pass-thru tilt plug (MD #323698) and instructions. Kits are available through Whole Goods only.
804. The harness comes complete with all fir tree fasteners (MD #136655) attached.
805. The float plug varies depending on the combine model and the electrical completion package required. To identify the correct float plug, refer to the electrical completion section for your specific combine.
806. The harness varies depending on the combine model and the electrical completion package required. For harness part numbers, refer to the electrical completion section for your specific combine.

198 Electrical – Base (Modular Hydraulic System)

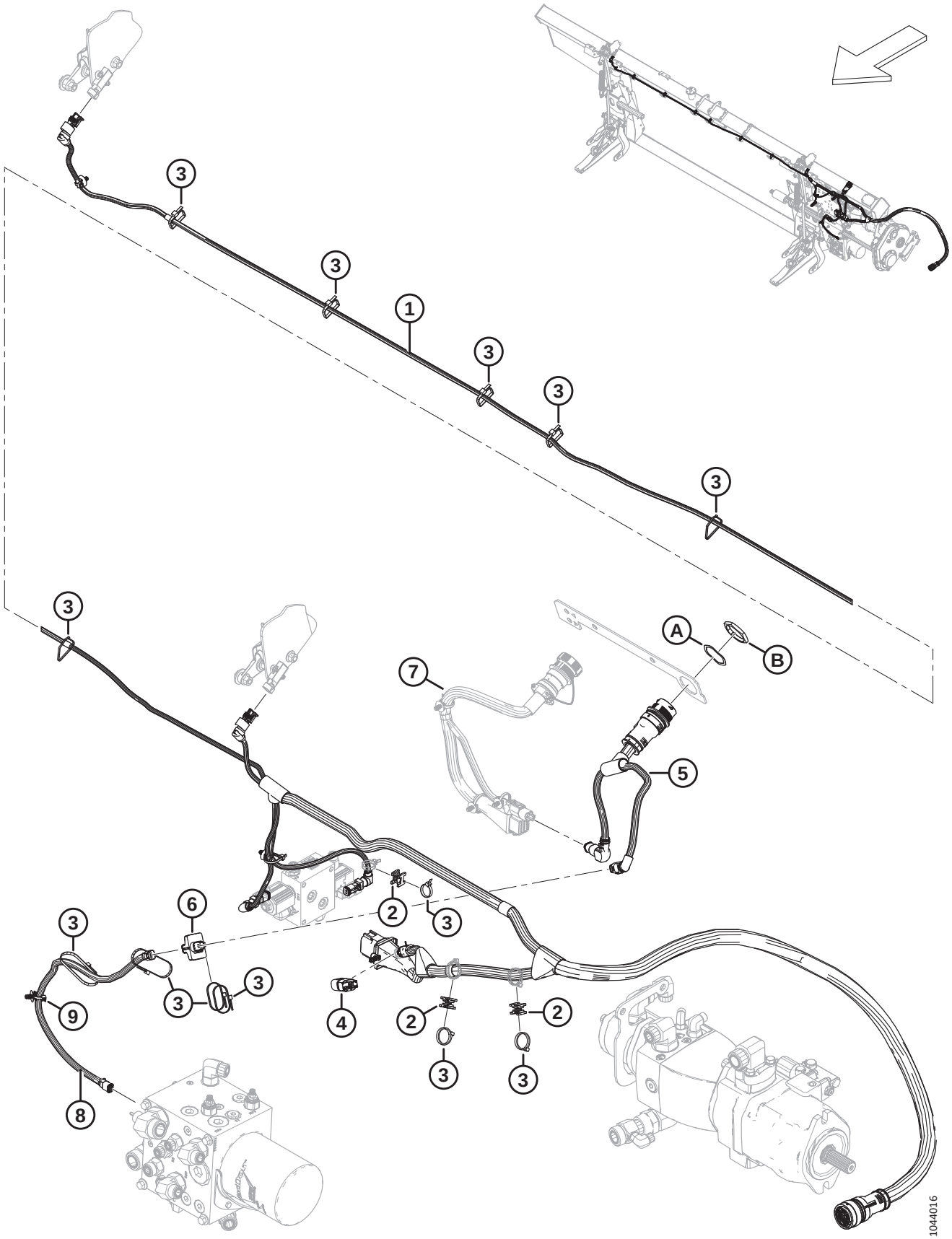

Ref	Part Number	Description	Qty	Serial Number
	B7196	KIT – LATERAL TILT PLUG [807]		
	B7489	KIT – AUTO HEADER HEIGHT PLUG [808]		
	B7490	KIT – PASS-THRU TILT PLUG [809]		
1	328089	HARNESS – MAIN [810]	1	
	136655	FASTENER – FIR TREE MT W/ TIE		
2	134442	SPACER – DUAL SWIVEL SADDLE	3	
3	21763	FASTENER – CABLE TIE, BLACK	A/R	
4	328318	PLUG – FLOAT CONFIG. 2 SENSOR (LATERAL TILT) [811]	OPT	
	328560	PLUG – FLOAT CONFIG. 1 SENSOR (AUTO HEADER HEIGHT) [811]	OPT	
	323698	PLUG – TILT, PASS-THRU [811]	OPT	
5	322383	HARNESS – FM200 ADAPTER	1	
6	304371	MODULE – VALVE DRIVER WITH SW	1	
7	REF	HARNESS – COMPLETION PACKAGE [812]		
8	378435	HARNESS – EXT. DRAPER CNTRL	1	
9	136655	FASTENER – FIR TREE MT W/ TIE		
A	134730	WASHER – LOCK, HDP 20, SIZE 24		
B	134728	NUT – PANEL, HDP 20, SIZE 24		

807. The kit includes lateral tilt plug (MD #328318) and instructions. Kits are available through Whole Goods only.
808. The kit includes auto header height plug (MD #328560) and instructions. Kits are available through Whole Goods only.
809. The kit includes pass-thru tilt plug (MD #323698) and instructions. Kits are available through Whole Goods only.
810. The harness comes complete with all fir tree fasteners (MD #136655) attached.
811. The float plug varies depending on the combine model and the electrical completion package required. To identify the correct float plug, refer to the electrical completion section for your specific combine.
812. The harness varies depending on the combine model and the electrical completion package required. For harness part numbers, refer to the electrical completion section for your specific combine.

199 Electrical – FM200 to Combine Cab

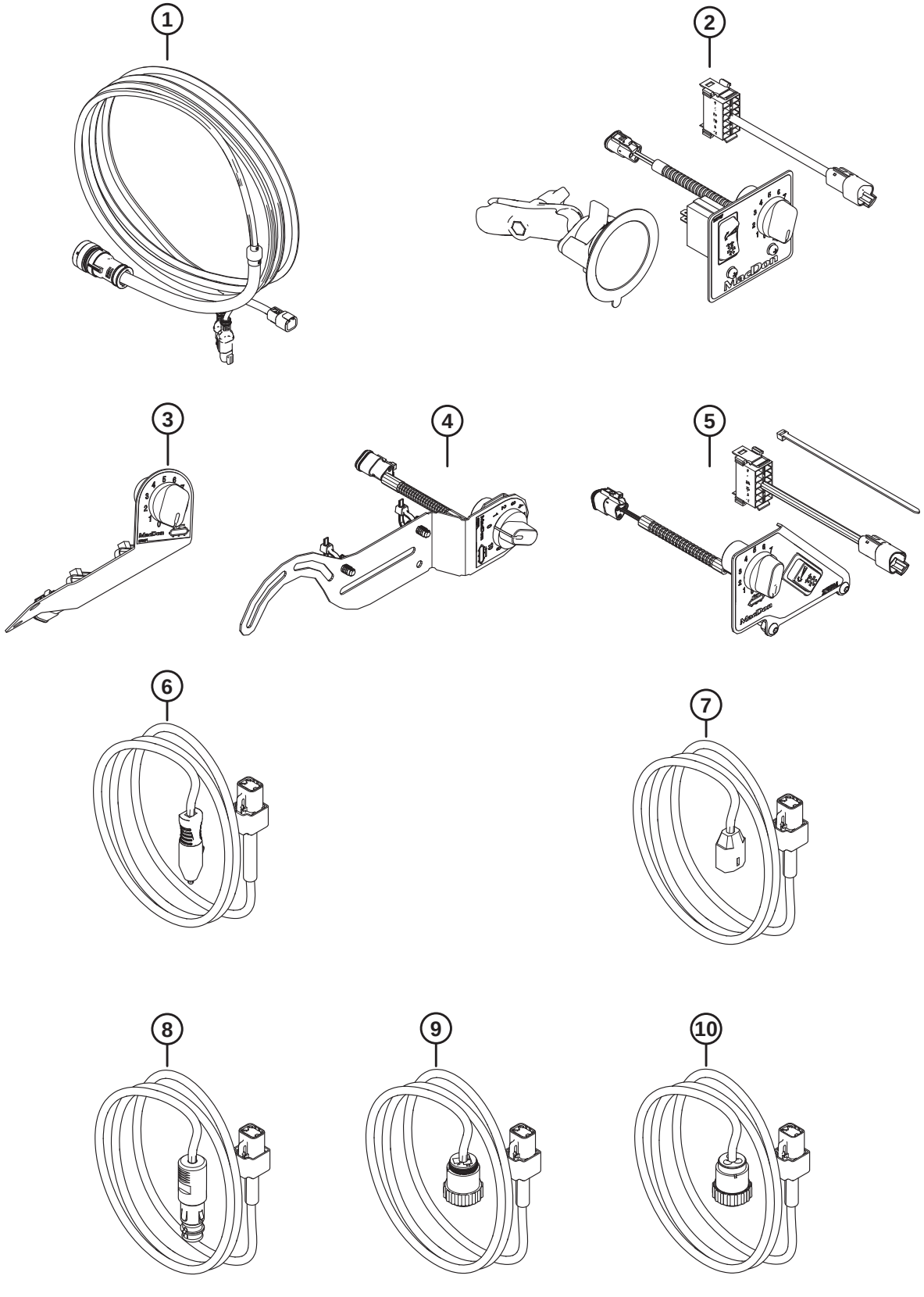

Ref	Part Number	Description	Qty	Serial Number
	B7048	KIT – FM2 TILT AND SD CONTROL, GENERIC [813]		
	B7431	KIT – CONTROL, SIDE DRAPER SPEED, CNH (2019 AND LATER) [814]		
	B7492	KIT – FM2 TILT AND SD CONTROL, JD [815]		
	B7506	KIT – CNH PRE-MY19 IN-CAB CONTROLS [816]		
	B7051	KIT – CAB POWER HARNESS, JD [817]		
	B7052	KIT – CAB POWER HARNESS, BOSCH/AUX [818]		
1	328549	KIT – CAB CONTROL [819]		
2	328550	KIT – TILT AND SIDE DRAPER CONTROL (GENERIC) [820]		
	314076	HARNESS – EXT. CAB ROCKER SW		
	287859	BASE – SUCTION CUP WITH ARM		
	NSS	CONTROL PANEL – ICSDSC, GENERIC [821]		
	213459	POTENTIOMETER – 5K [822]		
	109773	KNOB – PLASTIC [822]		
3	NSS	KIT – SIDE DRAPER CONTROL, CNH (2023 AND PRIOR) [823]		
	NSS	CONTROL PANEL, ICSDSC, CNH (2023 AND PRIOR) [824]		
	213459	POTENTIOMETER – 5K [822]		
	109773	KNOB – PLASTIC [822]		
	21763	FASTENER – CABLE TIE, BLACK		

813. The Generic FM2 Tilt and Side Draper Control kit (B7048) includes the Tilt and Side Draper Control kit (MD #328550). Kits are available through Whole Goods only.
814. The CNH Side Draper Speed Control kit for model year 2019 and later (B7431) includes the Side Draper Speed Control kit (MD #357945). Kits are available through Whole Goods only.
815. The John Deere FM2 Tilt and Side Draper Control kit (B7492) includes the Tilt and Side Draper Control kit (MD #323940). Kits are available through Whole Goods only.
816. The CNH Pre-MY19 In-Cab Controls kit (B7506) is used for all model year 2018 and prior CNH combines and includes the CNH bag assembly (MD #284900). Kits are available through Whole Goods only.
817. The John Deere Cab Power Harness kit (B7051) includes the John Deere Cab Power kit (MD #328554). Kits are available through Whole Goods only.
818. The Bosch/Aux Cab Power Harness kit (B7052) includes the Bosch/Aux Cab Power kit (MD #328555). Kits are available through Whole Goods only.
819. The kit includes combine cab control harness (NSS) and instructions.
820. The kit includes rocker switch harness (MD #314076), suction cup base (MD #287859), generic control panel (NSS), and instructions.
821. The generic control panel (NSS) includes generic panel (MD #287944), rocker switch (MD #287797), ball mount base (MD #287749), two screws (MD #136313), and two nuts (MD #320390).
822. The potentiometer and plastic knob are service parts for the control panel.
823. CNH Side Draper Control kit (MD #328551) has been superseded by kit (MD #357945). To service the superseded control kit, order Side Draper Speed Control kit (MD #357945).
824. CNH ICSDSC control panel (MD #276671) has been superseded by kit (MD #357945). To service the superseded control panel, order Side Draper Speed Control kit (MD #357945).

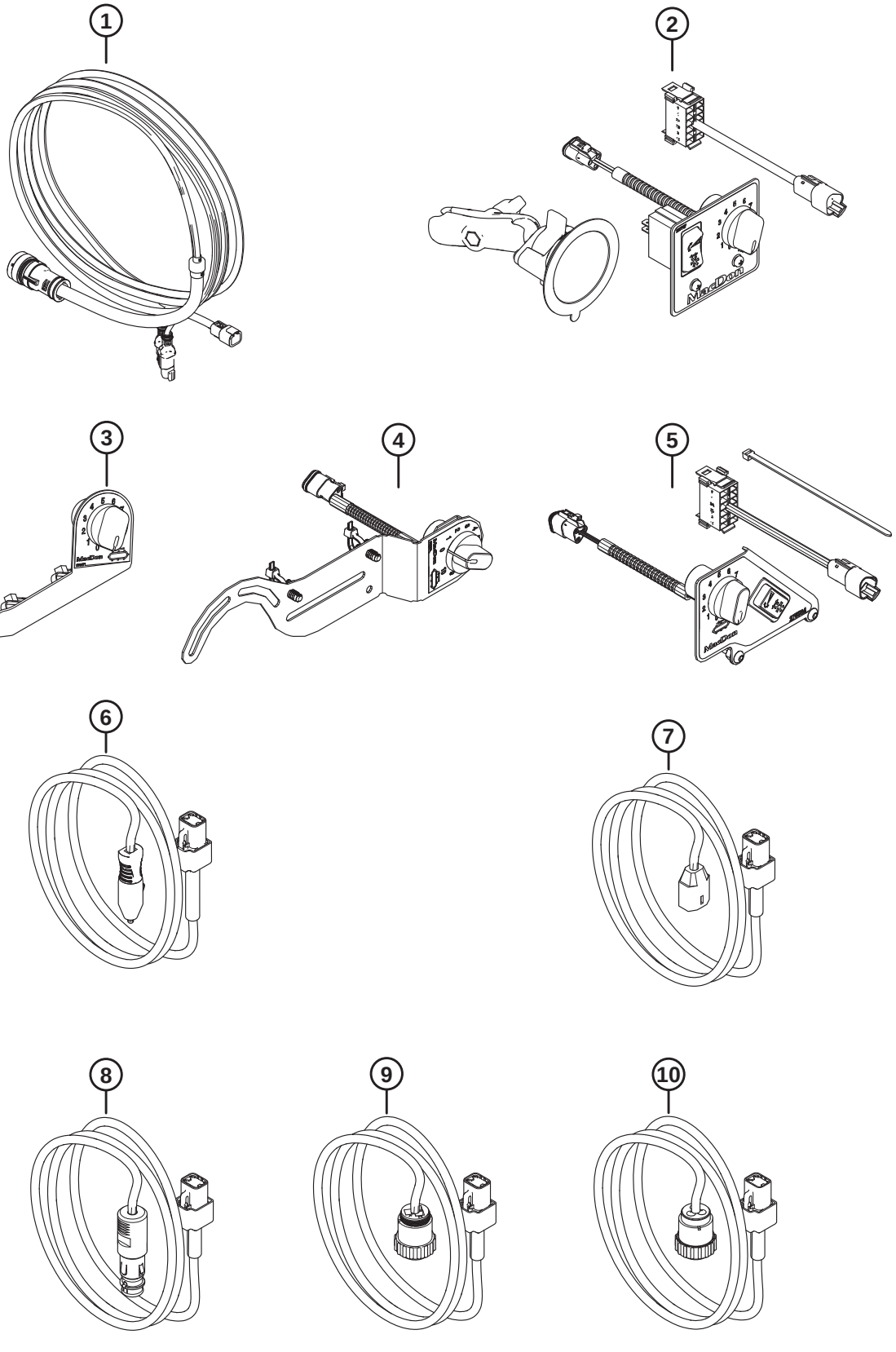
1
2
3
4
5
6
7
8
9
10
1041865

Ref	Part Number	Description	Qty	Serial Number
4	357945	KIT – SIDE DRAPER SPEED CONTROL (CNH) (2019 AND LATER) [825]		
	NSS	CONTROL – SDSC PANEL		
	213459	POTENTIOMETER – 5K [822]		
	109773	KNOB – PLASTIC [822]		
	136655	FASTENER – FIR TREE MT W/ TIE		
	184705	WASHER – FLAT M6-200HV-AA1J		
5	323940	KIT – TILT AND SIDE DRAPER CONTROL (JD) [826]		
	314076	HARNESS – EXT. CAB ROCKER SW		
	NSS	CONTROL PANEL, ICSDSC, JD [827]		
	213459	POTENTIOMETER – 5K [822]		
	109773	KNOB – PLASTIC [822]		
	21763	FASTENER – CABLE TIE, BLACK		
	136886	SCREW – HEX SOC BTN M6 X 1 X 16-10.9-AA1T		
	136771	NUT – HEX FLG TOP LOC M6 X 1-8-ZINC		
6	328553	KIT – CAB POWER AUX (AGCO) [828]		
	308941	HARNESS – EXT. CAB PWR AUX		
7	328554	KIT – CAB PWR JD [829]		
	308942	HARNESS – EXT. CAB PWR JD		
8	328555	KIT – CAB POWER BOSCH/AUX (CNH AND CLAAS) [830]		
	NSS	HARNESS – EXT. CAB PWR BOSCH/AUX		
9	NSS	KIT – CAB POWER CPC NA (CNH) [831]		
	NSS	HARNESS – EXT. CAB PWR CPC [832]		
10	NSS	KIT – CAB PWR CPC EU [833]		
	NSS	HARNESS – EXT. CAB PWR CPC EU [834]		
	337611	BAG ASSY – CBN CONTROL CLAAS [835]		
	NSS	BAG ASSY – CBN CONTROL CNH NA [836]		

825. The kit includes SDSC control panel (NSS), two fasteners (MD #136655), two washers (MD #184705), and instructions.
826. The kit includes JD ICSDSC control panel (NSS), rocker switch harness (MD #314076), cable tie (MD #21763), two screws (MD #136886), two nuts (MD #136771), and instructions.
827. The JD control panel (NSS) includes JD panel (MD #287945) and rocker switch (MD #287797).
828. The kit includes cab power harness (MD #308941) and instructions.
829. The kit includes John Deere cab power harness (MD #308942) and instructions.
830. The kit includes Bosch/Aux cab power harness (NSS) and instructions.
831. North American CNH CPC Cab Power kit (MD #328552) has been superseded by kit (MD #328555). To service the superseded cab power kit, order Bosch/Aux Cab Power kit (MD #328555).
832. CPC cab power harness (MD #308684) has been superseded by kit (MD #328555). To service the superseded power harness, order Bosch/Aux Cab Power kit (MD #328555).
833. European CNH CPC Cab Power kit (MD #335287) has been superseded by kit (MD #328555). To service the superseded cab power kit, order Bosch/Aux Cab Power kit (MD #328555).
834. CPC cab power harness (MD #328561) has been superseded by kit (MD #328555). To service the superseded power harness, order Bosch/Aux Cab Power kit (MD #328555).
835. The bag assembly includes Cab Control kit (MD #328549), Tilt and Side Draper Control kit (MD #328550), Bosch/Aux Cab Power kit (MD #328555), conduit (MD #293108), locking clip (MD #500454), cable ties (MD #21763, MD #30753), plug (MD #287784), and cable tie mounts (MD #305330).
836. The North American CNH bag assembly (MD #337617) has been superseded by CNH bag assembly (MD #284900). To service the superseded bag assembly, order CNH bag assembly (MD #284900).

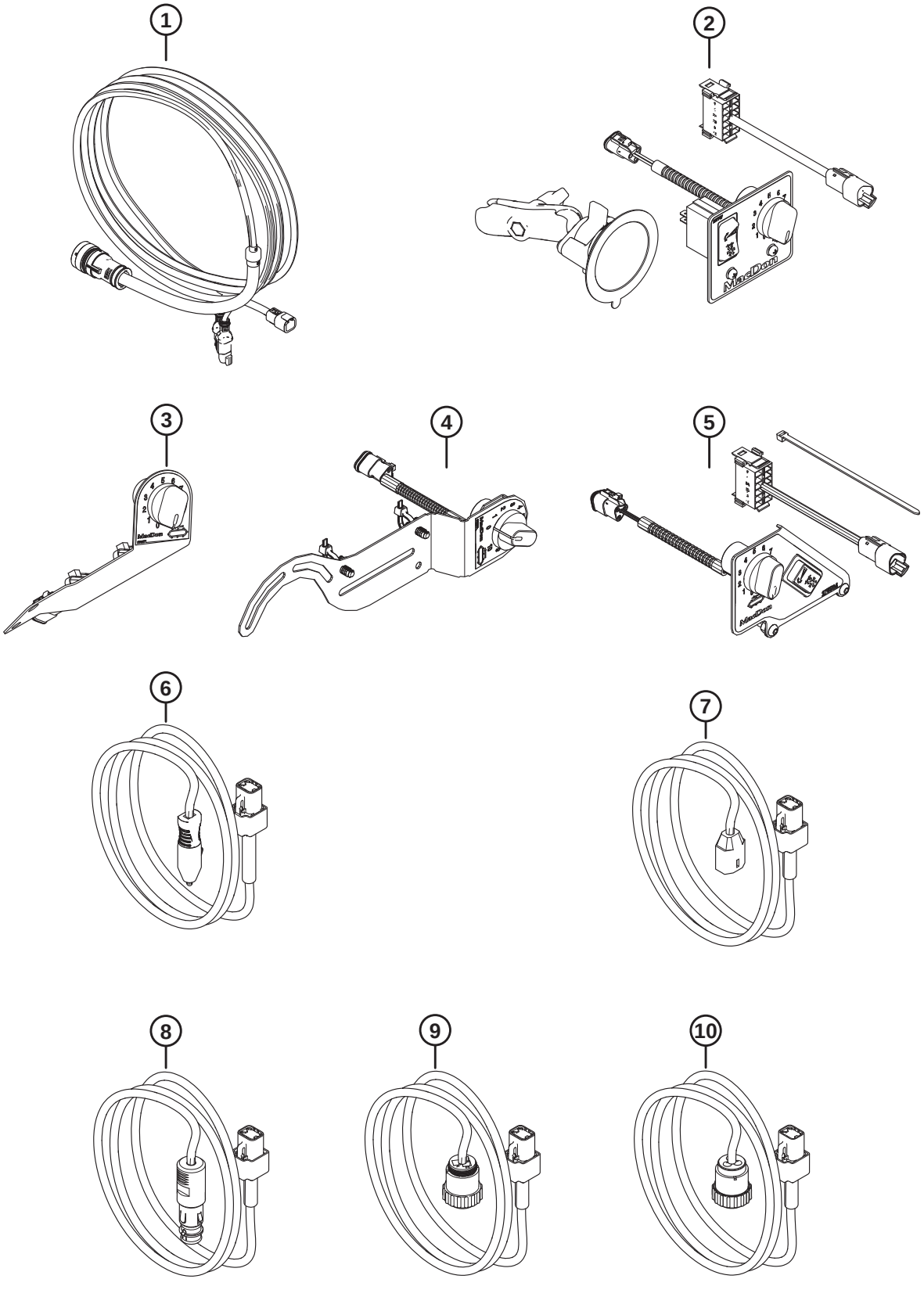
1
2
3
4
5
6
7
8
9
10
1041865

Ref	Part Number	Description	Qty	Serial Number
	NSS	BAG ASSY – CBN CONTROL CNH EU [837]		
	337619	BAG ASSY – CBN CONTROL JD [838]		
	337627	BAG ASSY – CBN CONTROL AGCO [839]		
	284900	BAG ASSY – IN-CAB CONTROL CNH [840]		
	NSS	KIT – IN-CAB ADAPTER AND MODULE [841]		

837. The European CNH bag assembly (MD #337618) has been superseded by CNH bag assembly (MD #284900). To service the superseded bag assembly, order CNH bag assembly (MD #284900).
838. The bag assembly includes Cab Control kit (MD #328549), Tilt and Side Draper Control kit (MD #323940), John Deere Cab Power kit (MD #328554), conduit (MD #293108), cable ties (MD #21763, MD #30753), and cable tie mounts (MD #305330).
839. The bag assembly includes Cab Control kit (MD #328549), Tilt and Side Draper Control kit (MD #328550), Bosch/Aux Cab Power kit (MD #328555), cable ties (MD #21763, MD #30753), and cable tie mounts (MD #305330).
840. The bag assembly includes Cab Control kit (MD #328549), Side Draper Speed Control kit (MD #357945), Bosch/Aux Cab Power kit (MD #328555), cable ties (MD #21763, MD #30753), cable tie mounts (MD #305330), and In-Cab Adapter and Module kit (NSS).
841. The In-Cab Adapter and Module kit (NSS) used for all model year 2018 and prior CNH combines and include cab adapter harness (MD #322383), valve driver module (MD #328411), lock washer (MD #134730), and panel nut (MD #134728). Refer to Section *197 Electrical – Base (Integrated Hydraulic System), page 495* for component locations.

200 Decals and Reflectors – FM200

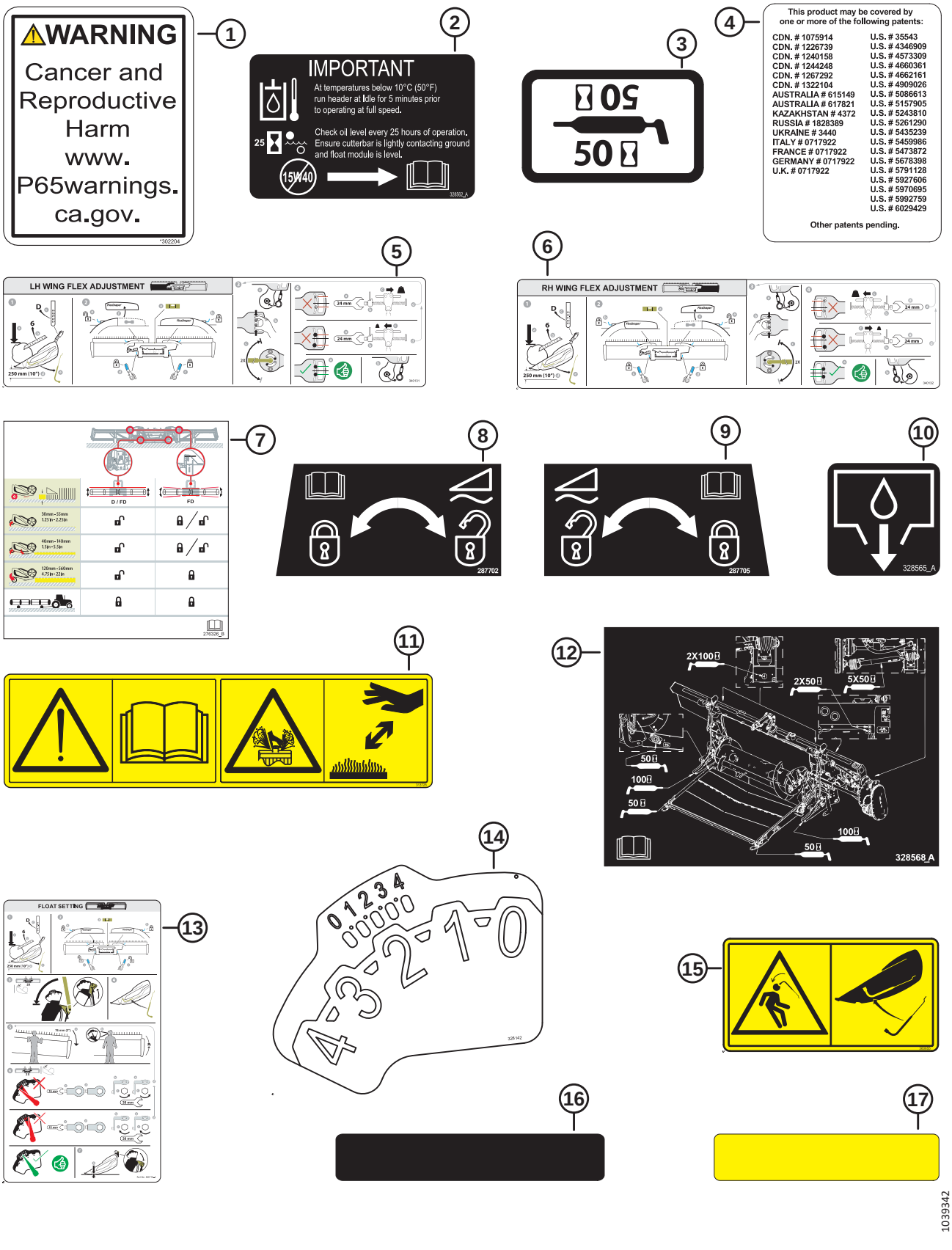

Ref	Part Number	Description	Qty	Serial Number
1	302204	DECAL – CA PROPOSITION 65		
2	328562	DECAL – OIL, IMPORTANT		
3	23165	DECAL – 50 HR LUBE		
	23163	DECAL – 10 HR LUBE		
4	32070	DECAL – PATENT NUMBER		
5	340131	DECAL – LH FLEX SETTING		
6	340132	DECAL – RH FLEX SETTING		
7	276326	DECAL – HEADER ADJUSTMENT		
8	287702	DECAL – FLOAT LOCK, LH		
9	287705	DECAL – FLOAT LOCK, RH		
10	328565	DECAL – OIL DRAIN		
11	313728	DECAL – READ MANUAL/FLUID SPRAY		
12	347342	DECAL – GREASE FM200		
13	360716	DECAL – FLOAT SETTING [842]		
	368631	DECAL – FLOAT SETTING [843]		
14	328142	DECAL – FSM		
15	360655	DECAL – SAFETY RETURN WRENCH		
16	174131	STRIP – ANTI SLIP, 250 MM LG		
	132117	STRIP – ANTI SLIP, 450 MM LG		
	140225	STRIP – ANTI SLIP, 550 MM LG		
17	115146	REFLECTOR – AMBER		

842. For model year 2023 and prior.
843. For model year 2024 and later.

201 Challenger®, Massey Ferguson®, and Gleaner® – Float Module Completion

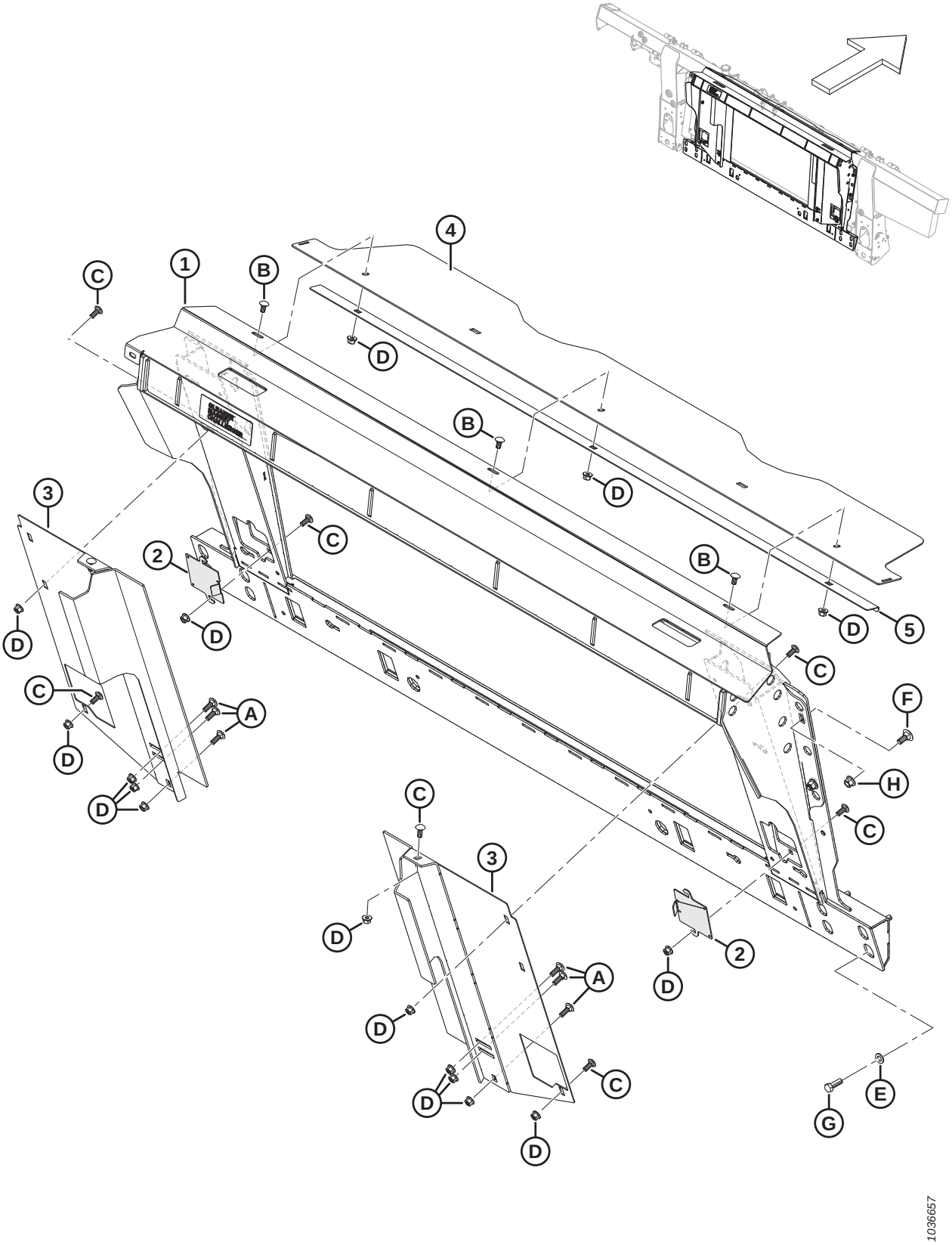

Ref	Part Number	Description	Qty	Serial Number
	B7313	KIT – GMC TRANSITION FRAME [844]		
1	347480	FRAME – GMC W/ DECAL	1	
2	347431	DOOR – ACCESS	2	
3	337862	FILLER – LH WELDT	1	
	337863	FILLER – RH WELDT	1	
4	357195	COVER – FEED AUGER TOP	1	
5	301629	RETAINER – DUST COVER	1	
A	184662	BOLT – RHSN TFL M10 X 1.5 X 30-8.8-AA1J		
B	184657	BOLT – RHSSN M10 X 1.5 X 20-8.8-AA1J		
C	136506	BOLT – RHSSN M10 X 1.5 X 25-8.8-AA1J		
D	135799	NUT – HEX FLG CTR LOC M10 X 1.5-10		
E	184714	WASHER – FLAT REG M12-300HV		
F	184667	BOLT – RHSN M12 X 1.75 X 30-8.8-ZINC		
G	152730	BOLT – HEX HD TFL M12 X 1.75 X 35-10.9-AA1J		
H	136431	NUT – HEX FLG CTR LOC M12 X 1.75-10		

844. Kits are available through Whole Goods only.

202 Challenger®, Massey Ferguson®, and Gleaner® – Hydraulic/ Electrical Completion

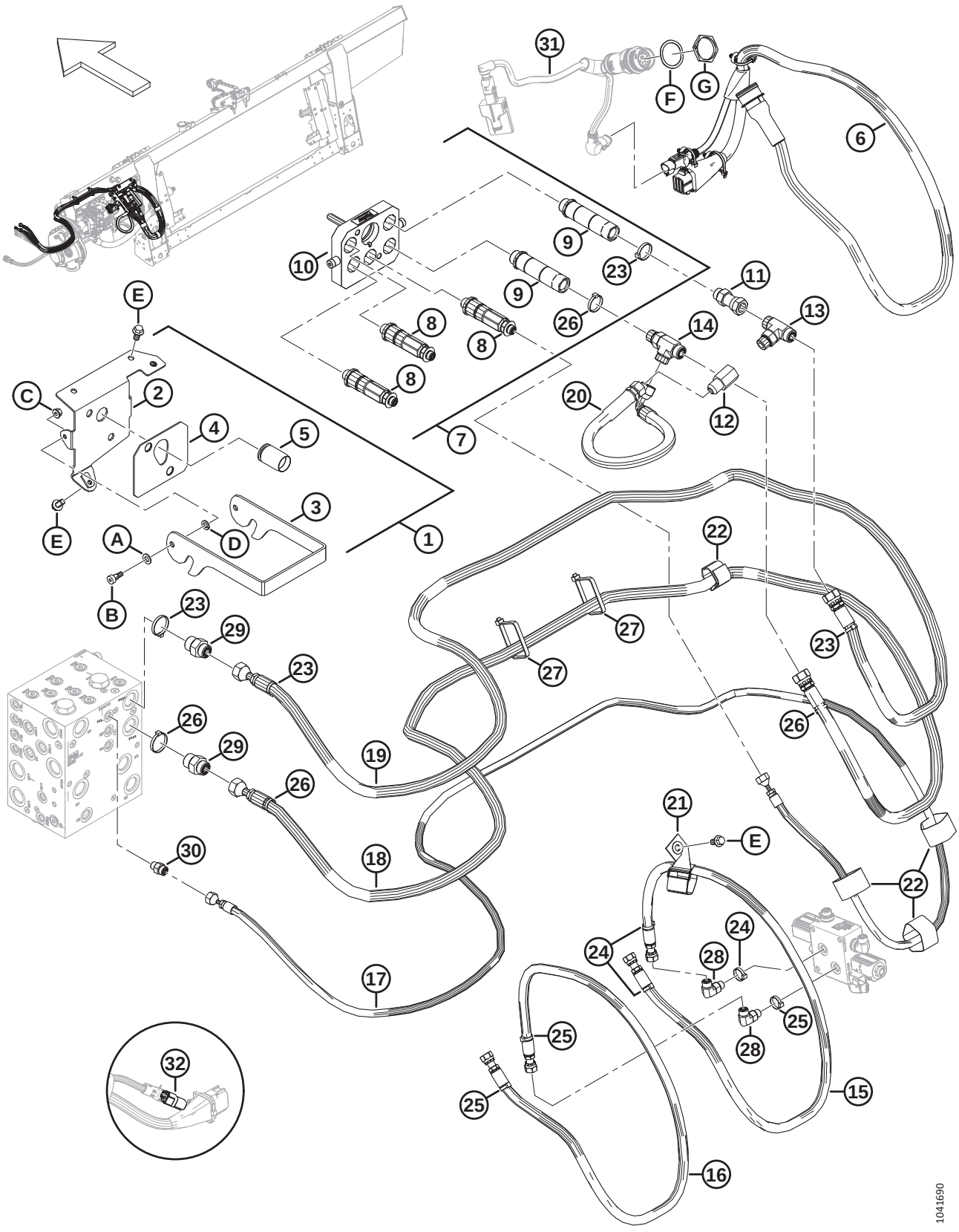

Ref	Part Number	Description	Qty	Serial Number
	B7165	KIT – GLNR/MSSY/CHLNGR HYD ELEC COMP [845]		
1	328872	ASSEMBLY – MCPLR MOUNT AGCO	1	
2	308249	WELDT – COUPLER SUPPORT, AGCO	1	
3	248960	LATCH – COUPLER BRACKET	1	
4	187018	PAD – RUBBER	1	
5	129148	PLUG – RUBBER	1	
6	322386	HARNESS – COMP., AGCO	1	
7	279737	COUPLING – MULTI AGCO 5-POS	1	
8	279011	KIT – COUPLER, 3/8 C/W 3/8 FTG	3	
	279034	SEAL – SHAPED, 3/8 IN.		
9	279012	KIT – COUPLER, 9/16 C/W 5/8 FTG	2	
	279035	SEAL – SHAPED, 9/16 IN.		
10	294098	KIT – COUPLER PLATE ASSY, AGCO		
11	252650	FITTING – ADAPTER HYD	1	
	44210	O-RING – Ø2.46 X Ø19.18		
12	187031	VALVE – CHECK	1	
13	136181	FITTING – BRANCH TEE HYD	1	
	44210	O-RING – Ø2.46 X Ø19.18		
	135867	O-RING – Ø1.78 X Ø15.60		
14	135598	FITTING – TEE HYD STR THD O-RING	1	
	44210	O-RING – Ø2.46 X Ø19.18		
	135867	O-RING – Ø1.78 X Ø15.60		
15	308255	HOSE – HYD, REEL FORE AGCO	1	
16	308254	HOSE – HYD, REEL AFT AGCO	1	
17	308253	HOSE – HYD, REEL LIFT AGCO	1	
18	308252	HOSE – HYD, REEL RET AGCO	1	
19	308251	HOSE – HYD, REEL PRESS AGCO	1	
20	287878	HOSE – HYD, REEL BYPASS	1	
21	163598	CINCH STRAP, HANGING, 6 IN. LG	1	
22	135444	CINCH STRAP 6 IN. LG	4	
23	49232	FASTENER – CABLE TIE, WHITE	4	
24	49227	FASTENER – CABLE TIE, GREEN	3	
25	40702	FASTENER – CABLE TIE, RED	3	
26	40701	FASTENER – CABLE TIE, YELLOW	4	
27	30753	FASTENER – CABLE TIE, BLACK	2	
28	136095	FITTING – ELBOW 90° HYD	2	
	135865	O-RING – Ø1.78 X Ø9.25		
	50219	O-RING – Ø1.98 X Ø11.89		

845. Kits are available through Whole Goods only.

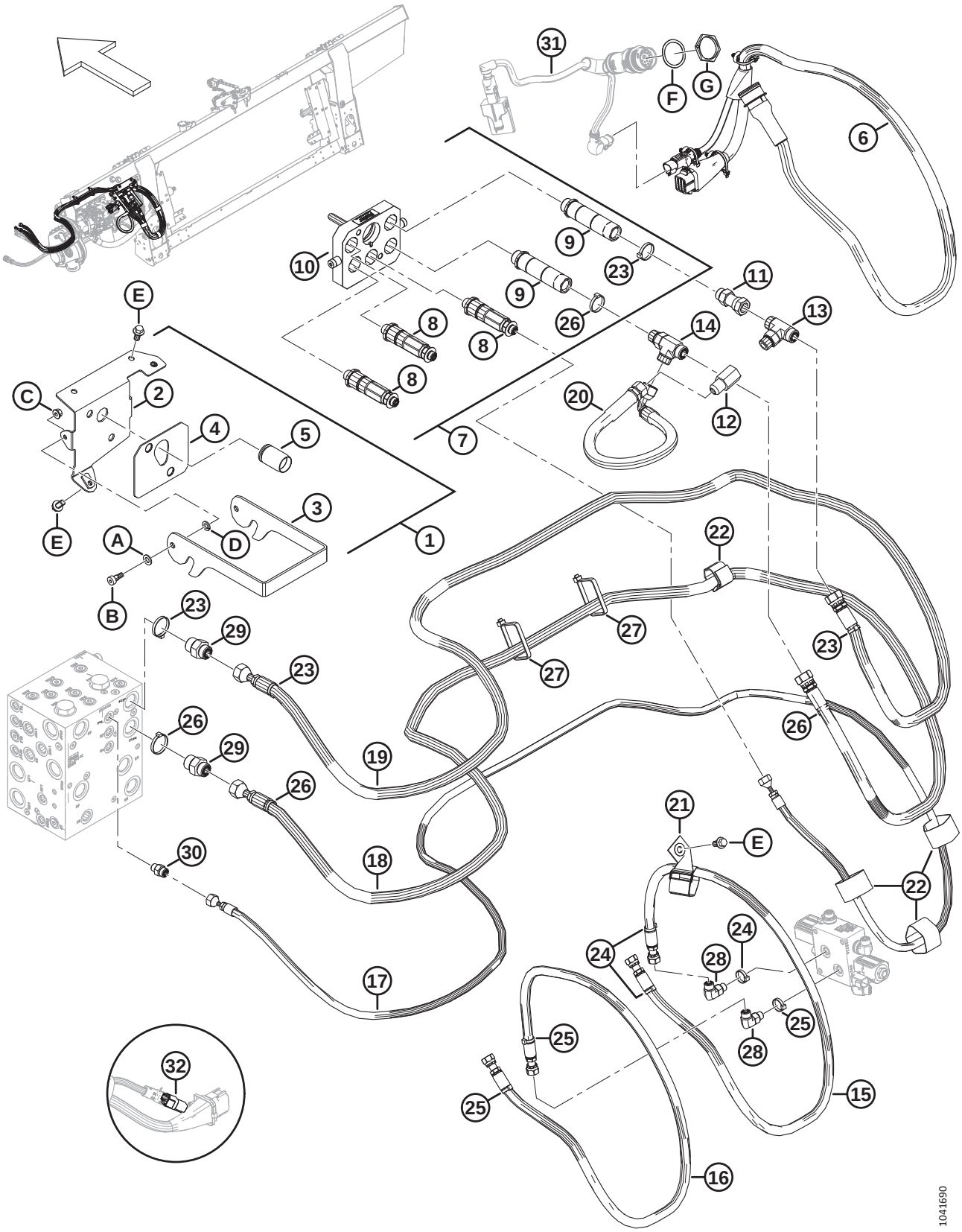
31
F
G
6
9
23
10
9
26
11
13
14
8
8
8
20
12
7
E
C
2
4
5
3
E
A
D
1
B
22
27
27
23
23
29
26
29
26
19
26
21
E
30
18
22
24
24
28
28
25
25
17
25
15
32
16
1041690

Ref	Part Number	Description	Qty	Serial Number
29	135786	FITTING – ADAPTER	2	
	30971	O-RING – Ø2.95 X Ø23.47		
	135867	O-RING – Ø1.78 X Ø15.60		
30	135778	FITTING – ADAPTER	1	
	135865	O-RING – Ø1.78 X Ø9.25		
	50219	O-RING – Ø1.98 X Ø11.89		
31	REF	HARNESS – CAB ADAPTER [846]	1	
	REF	MODULE – VALVE DRIVER [846]	1	
32	REF	PLUG – FLOAT CONFIG. 2 SENSOR (LATERAL TILT) [847]	1	
A	184711	WASHER – FLAT REG M10-200HV-AA1J		
B	135894	SCREW – HEX SOC HD SHLDR M10		
C	135337	NUT – HEX FLG CTR LK M8 X 1.25-8-AA1J		
D	30632	WASHER – LOCK SPRING M10		
E	152655	BOLT – HEX FLG HD M10 X 1.5 X20-8.8-AA1J		
F	134730	WASHER – LOCK, HDP 20, SIZE 24		
G	134728	NUT – PANEL, HDP 20, SIZE 24		

846. For the adapter harness, valve driver module, and hardware, refer to Section *197 Electrical – Base (Integrated Hydraulic System), page 495* or Section *198 Electrical – Base (Modular Hydraulic System), page 497*.

847. The lateral tilt float plug (MD #328318) connects to the float module's main harness at P600. The float plug comes preinstalled for model year 2024 and later machines configured for Challenger®, Massey Ferguson®, and Gleaner® combines, but it is NOT included in the completion package (B7165). To order the float plug complete with installation instructions, refer to Section *197 Electrical – Base (Integrated Hydraulic System), page 495* or Section *198 Electrical – Base (Modular Hydraulic System), page 497*.

203 IDEAL™ Series – Float Module Completion

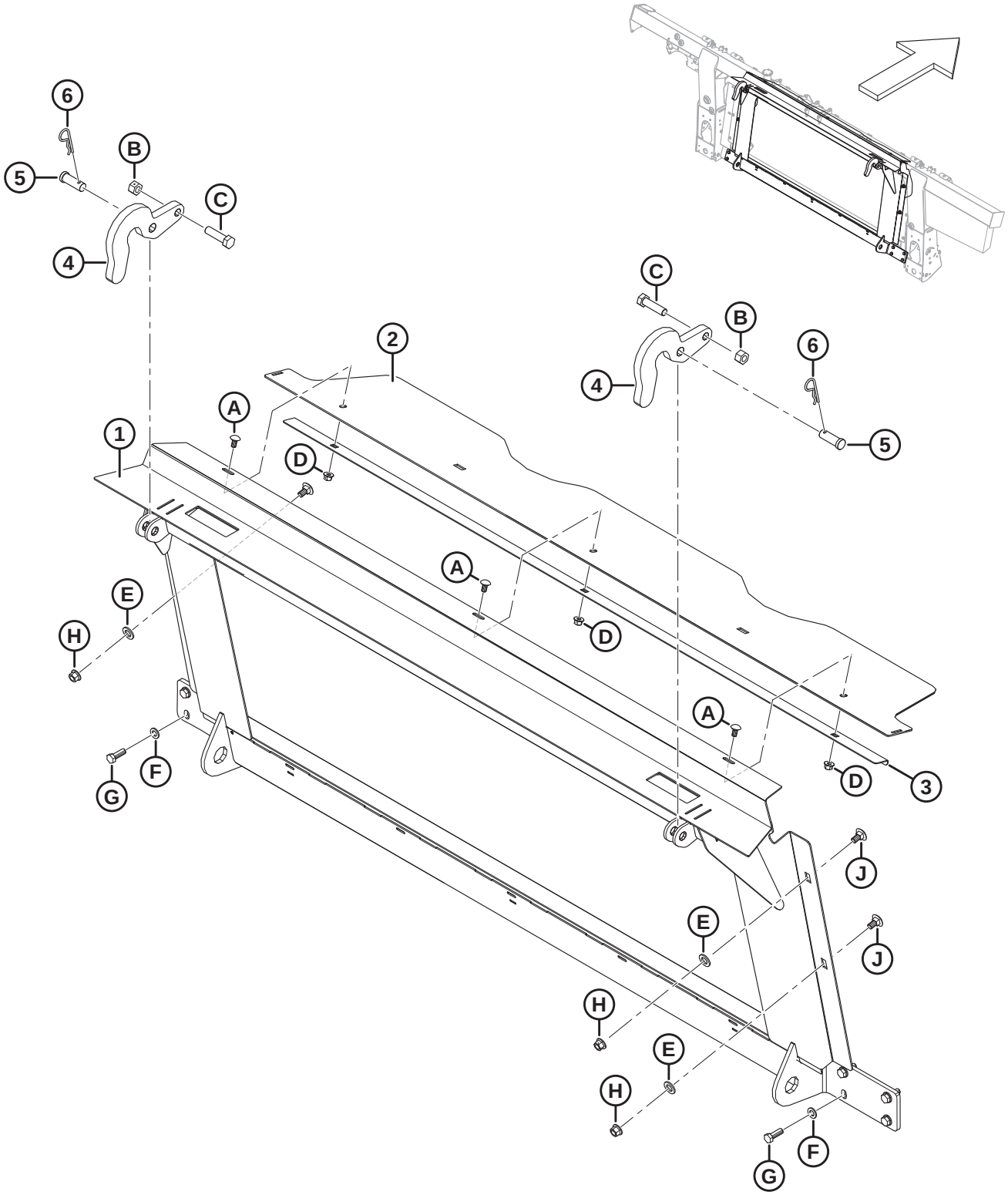

1034854

Ref	Part Number	Description	Qty	Serial Number
	B7107	KIT – IDEAL TRANSITION FRAME [848]		
1	314678	FRAME – IDEAL TRANSITION W/ DECAL	1	
2	357195	COVER – FEED AUGER TOP	1	
3	301629	RETAINER – DUST COVER	1	
4	301451	SUPPORT – HOOK	2	
5	158080	PIN – CLEVIS	2	
6	13125	PIN – HAIR	2	
A	184657	BOLT – RHSSN M10 X 1.5 X 20-8.8-AA1J		
B	136476	NUT – HEX CTR LOC M16 X 2-8		
C	136141	BOLT – HEX HD M16 X 2 X 60-8.8-AA1J		
D	135799	NUT – HEX FLG CTR LOC M10 X 1.5-10		
E	184717	WASHER – FLAT REG M16-200HV-AA1J		
F	184714	WASHER – FLAT REG M12-300HV		
G	152730	BOLT – HEX HD TFL M12 X 1.75 X 35-10.9-AA1J		
H	136431	NUT – HEX FLG CTR LOC M12 X 1.75-10		
J	135903	BOLT – RHSN M12 X 1.75 X 25-8.8-ZINC		

848. Kits are available through Whole Goods only.

204 IDEAL™ Series – Hydraulic/Electrical Completion

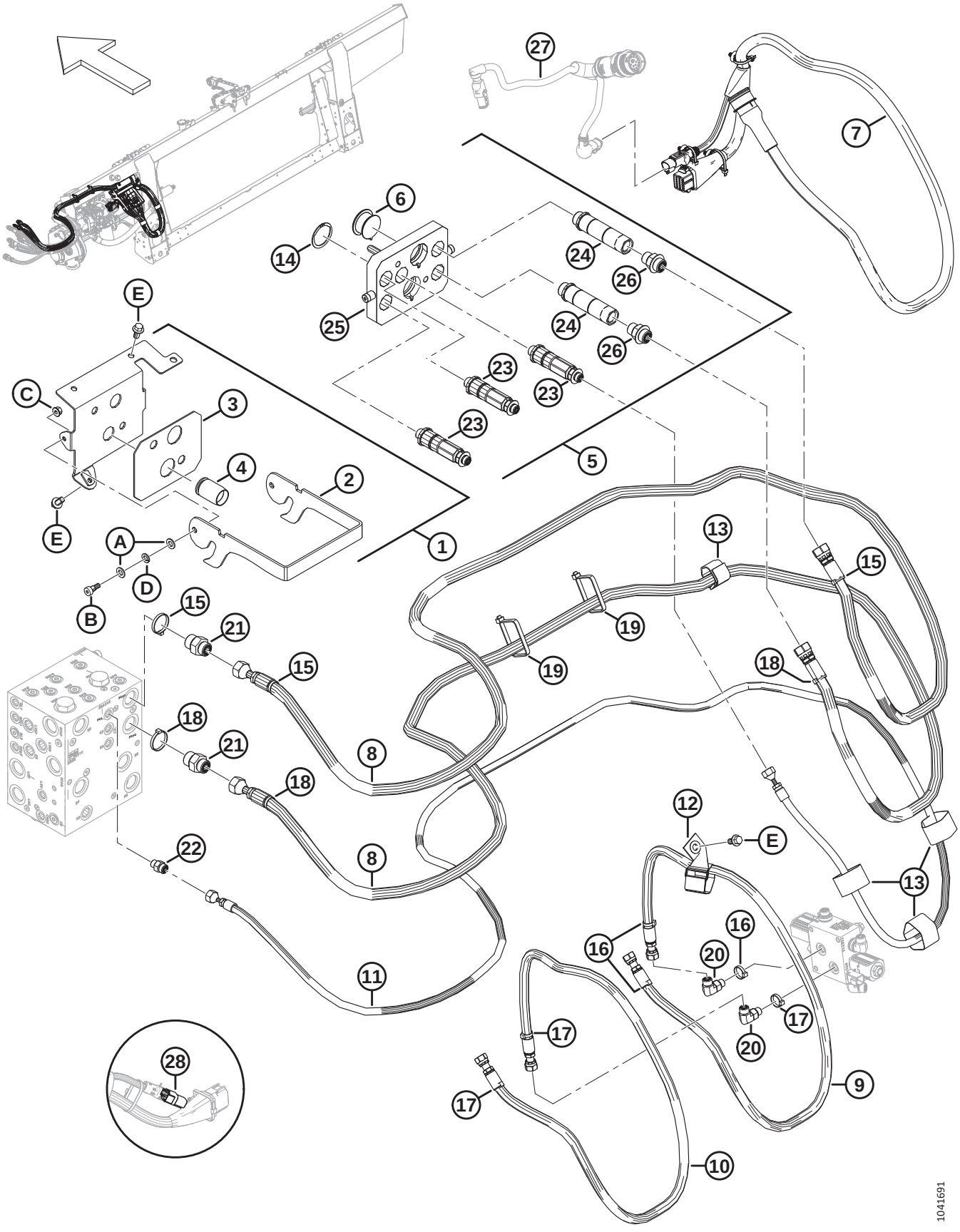

Ref	Part Number	Description	Qty	Serial Number
	B7109	KIT – IDEAL HYD ELEC COMPLETION [849]		
1	337981	ASSEMBLY – MULTI CPLR MOUNT	1	
2	337980	LATCH – MULTICOUPLER	1	
3	302030	PAD – RUBBER	1	
4	129148	PLUG – RUBBER	1	
5	335008	COUPLING – MULTI, AGCO 5-POS	1	
6	328968	CAP – HD34 PLUG	1	
7	328908	HARNESS – COMP., IDEAL	1	
8	328887	HOSE – HYD, REEL DRIVE IDEAL	2	
9	308255	HOSE – HYD, REEL FORE AGCO	1	
10	308254	HOSE – HYD, REEL AFT AGCO	1	
11	308253	HOSE – HYD, REEL LIFT AGCO	1	
12	163598	CINCH STRAP, HANGING, 6 IN. LG	1	
13	135444	CINCH STRAP 6 IN. LG	4	
14	135267	RING – INVERTED EXT RETAINING	1	
15	49232	FASTENER – CABLE TIE, WHITE	3	
16	49227	FASTENER – CABLE TIE, GREEN	3	
17	40702	FASTENER – CABLE TIE, RED	3	
18	40701	FASTENER – CABLE TIE, YELLOW	3	
19	30753	FASTENER – CABLE TIE, BLACK	2	
20	136095	FITTING – ELBOW 90° HYD	2	
	135865	O-RING – Ø1.78 X Ø9.25		
	50219	O-RING – Ø1.98 X Ø11.89		
21	135786	FITTING – ADAPTER	2	
	30971	O-RING – Ø2.95 X Ø23.47		
	135867	O-RING – Ø1.78 X Ø15.60		
22	135778	FITTING – ADAPTER	1	
	135865	O-RING – Ø1.78 X Ø9.25		
	50219	O-RING – Ø1.98 X Ø11.89		
23	279011	KIT – COUPLER, 3/8 C/W 3/8 FTG	3	
	279034	SEAL – SHAPED, 3/8 IN.		
24	279012	KIT – COUPLER, 9/16 C/W 5/8 FTG	2	
	279035	SEAL – SHAPED, 9/16 IN.		
25	294394	KIT – COUPLER PLATE ASSY, AGCO	1	

849. Kits are available through Whole Goods only.

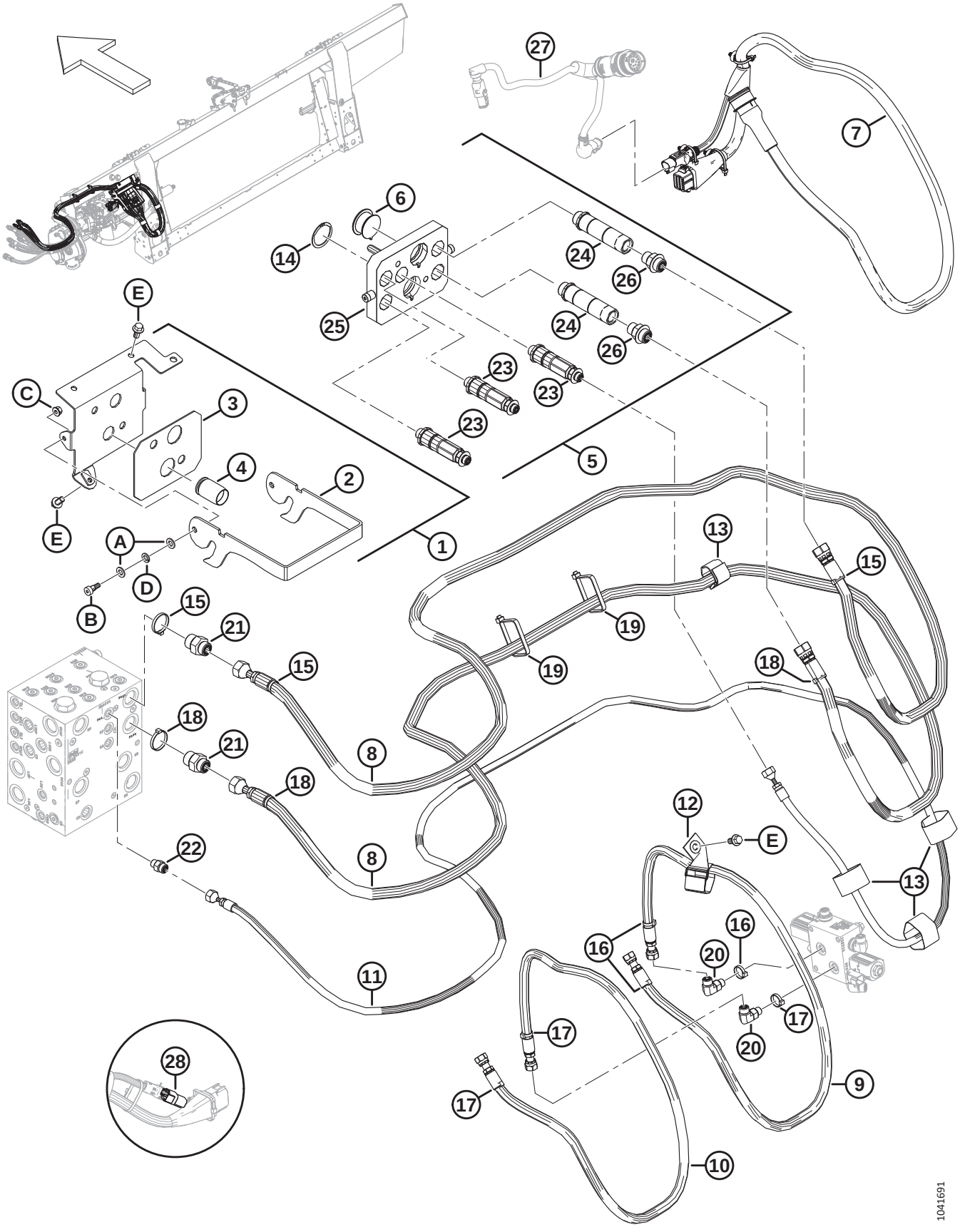
27
7
6
14
24
26
25
24
26
23
23
23
E
C
3
4
2
E
A
D
B
5
1
13
15
19
19
15
21
15
18
18
21
18
8
8
22
12
E
13
16
16
20
17
20
17
11
28
17
9
10
1041691

Ref	Part Number	Description	Qty	Serial Number
26	184461	FITTING – ADAPTER	2	
	44210	O-RING – Ø2.46 X Ø19.18		
	135867	O-RING – Ø1.78 X Ø15.60		
27	REF	HARNESS – CAB ADAPTER [850]	1	
28	REF	PLUG – FLOAT CONFIG. 2 SENSOR (LATERAL TILT) [851]	1	
A	184711	WASHER – FLAT REG M10-200HV-AA1J		
B	135894	SCREW – HEX SOC HD SHLDR M10		
C	135337	NUT – HEX FLG CTR LK M8 X1.25-8-AA1J		
D	30632	WASHER – LOCK SPRING M10		
E	152655	BOLT – HEX FLG HD M10 X 1.5 X 20-8.8-AA1J		

850. For the harness, refer to Section *197 Electrical – Base (Integrated Hydraulic System), page 495* or Section *198 Electrical – Base (Modular Hydraulic System), page 497*.

851. The lateral tilt float plug (MD #328318) connects to the float module's main harness at P600. The float plug comes preinstalled for model year 2024 and later machines configured for IDEAL™ Series combines, but it is NOT included in the completion package (B7109). To order the float plug complete with installation instructions, refer to Section *197 Electrical – Base (Integrated Hydraulic System), page 495* or Section *198 Electrical – Base (Modular Hydraulic System), page 497*.

205 Challenger®, Massey Ferguson®, and IDEAL™ Series – Auger Completion

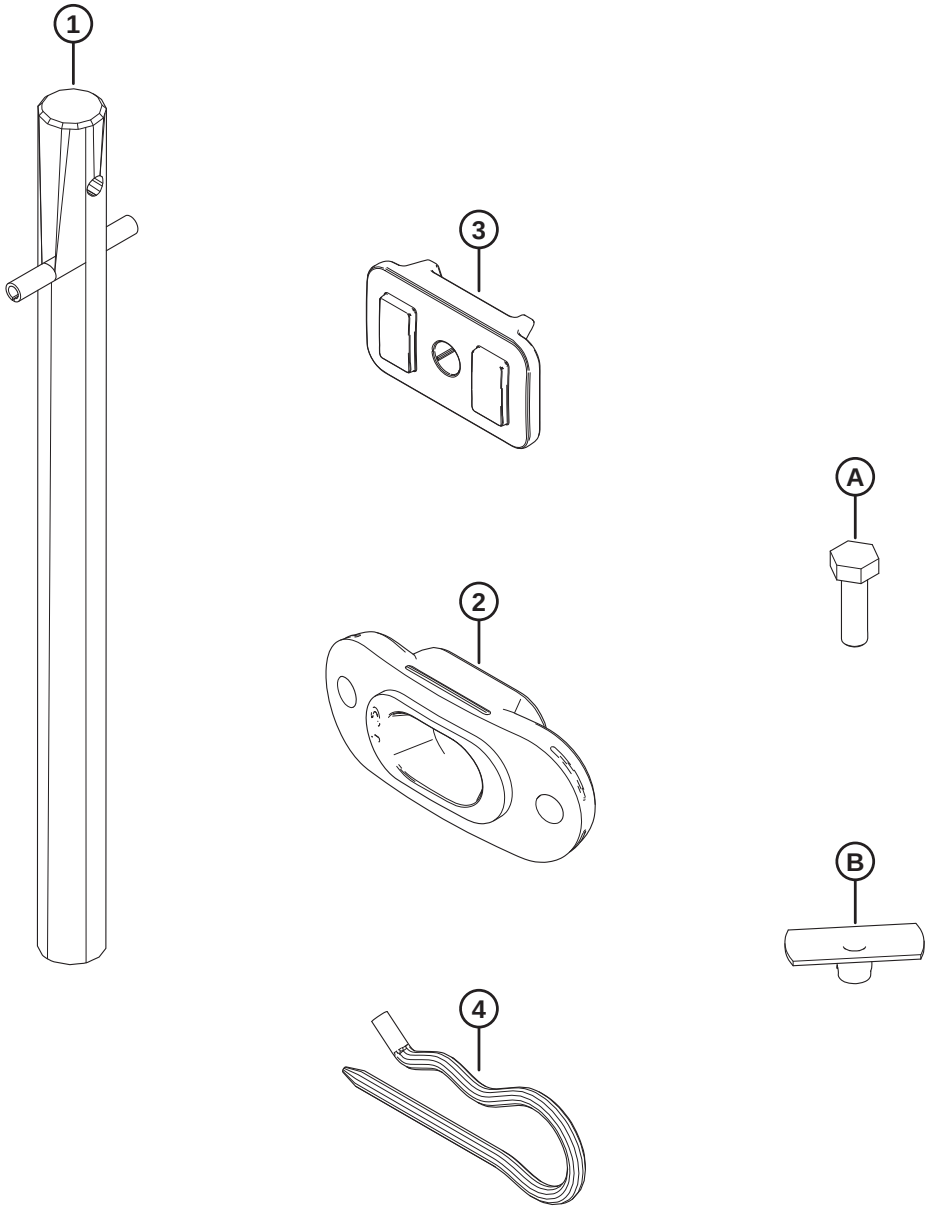

1034850

Ref	Part Number	Description	Qty	Serial Number
1	337152	KIT – FINGER	8	
	7642	PIN – SPRING 3/16 DIA X 1.5 LG	8	
2	337143	GUIDE	8	
3	213084	PLUG – FLIGHTING SLOT	8	
4	123180	PIN – HAIR	8	
A	252703	BOLT – HEX HD TFL M6 X 1 X 20 X SPCL-12.9-AF0C		
B	197263	NUT – TEE M6 X 1		

206 Case IH – Float Module Completion

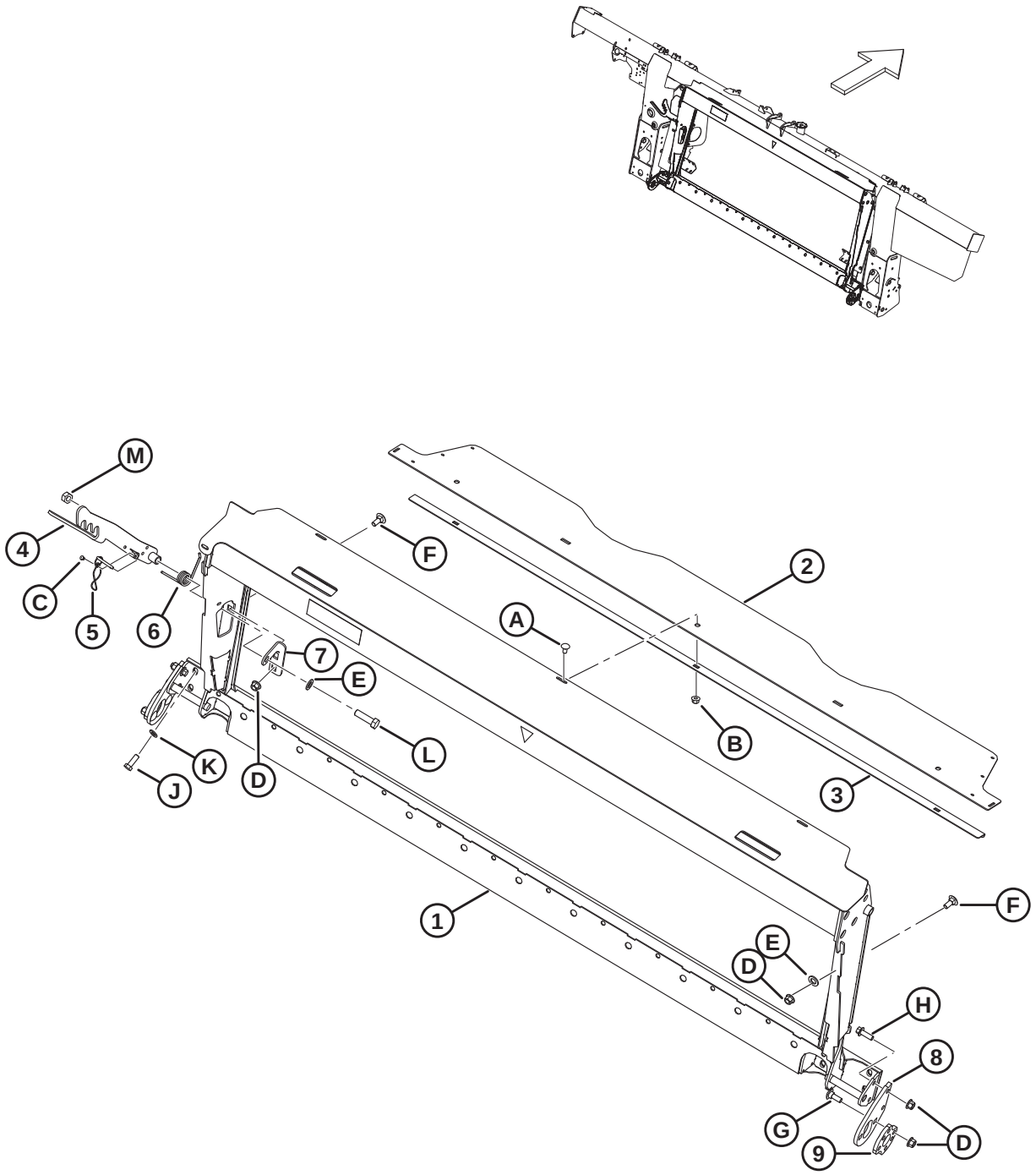

Ref	Part Number	Description	Qty	Serial Number
	B7476	**KIT – CNH TRANSITION FRAME** [852]		
1	**357567**	**ASSY – CNH TRANSITION W/ DECAL**	**1**	
2	357195	COVER – FEED AUGER TOP	1	
3	301629	RETAINER – DUST COVER	1	
4	347141	LATCH – WELDT	1	
5	237363	PIN – DETENT WITH 8 IN. LANYARD	1	
6	156948	SPRING – TORSION	1	
7	**357606**	**SUPPORT – BOLT MOUNT**	**1**	
8	**284976**	**SUPPORT – ANCHOR MOUNT**	**2**	
9	**284971**	**PLATE – ADJUSTMENT**	**2**	
A	184657	BOLT – RHSSN M10 X 1.5 X 20-8.8-AA1J		
B	135799	NUT – HEX FLG CTR LOC M10 X 1.5-10		
C	**113799**	**RIVET – POP**		
D	136431	NUT – HEX FLG CTR LOC M12 X 1.75-10		
E	**184717**	**WASHER – FLAT REG M16-200HV-AA1J**		
F	**184667**	**BOLT – RHSN M12 X 1.75 X 30-8.8-ZINC**		
G	**136291**	**BOLT – RHSN TFL M12 X 1.75 X 35-8.8-ZINC**		
H	**152731**	**BOLT – HEX FLG HD TFL M12 X 1.75 X 35-10.9-ZINC**		
J	**152730**	**BOLT – HEX HD TFL M12 X 1.75 X 35-10.9-AA1J**		
K	184714	WASHER – FLAT REG M12-300HV		
L	**136717**	**BOLT – HEX HD M16 X 2 X 55-10.9**		
M	**320208**	**NUT – HEX CTR LOCK M16 X 2-12-ZINC**		

852. Kits are available through Whole Goods only.

207 Case IH – Hydraulic/Electrical Completion

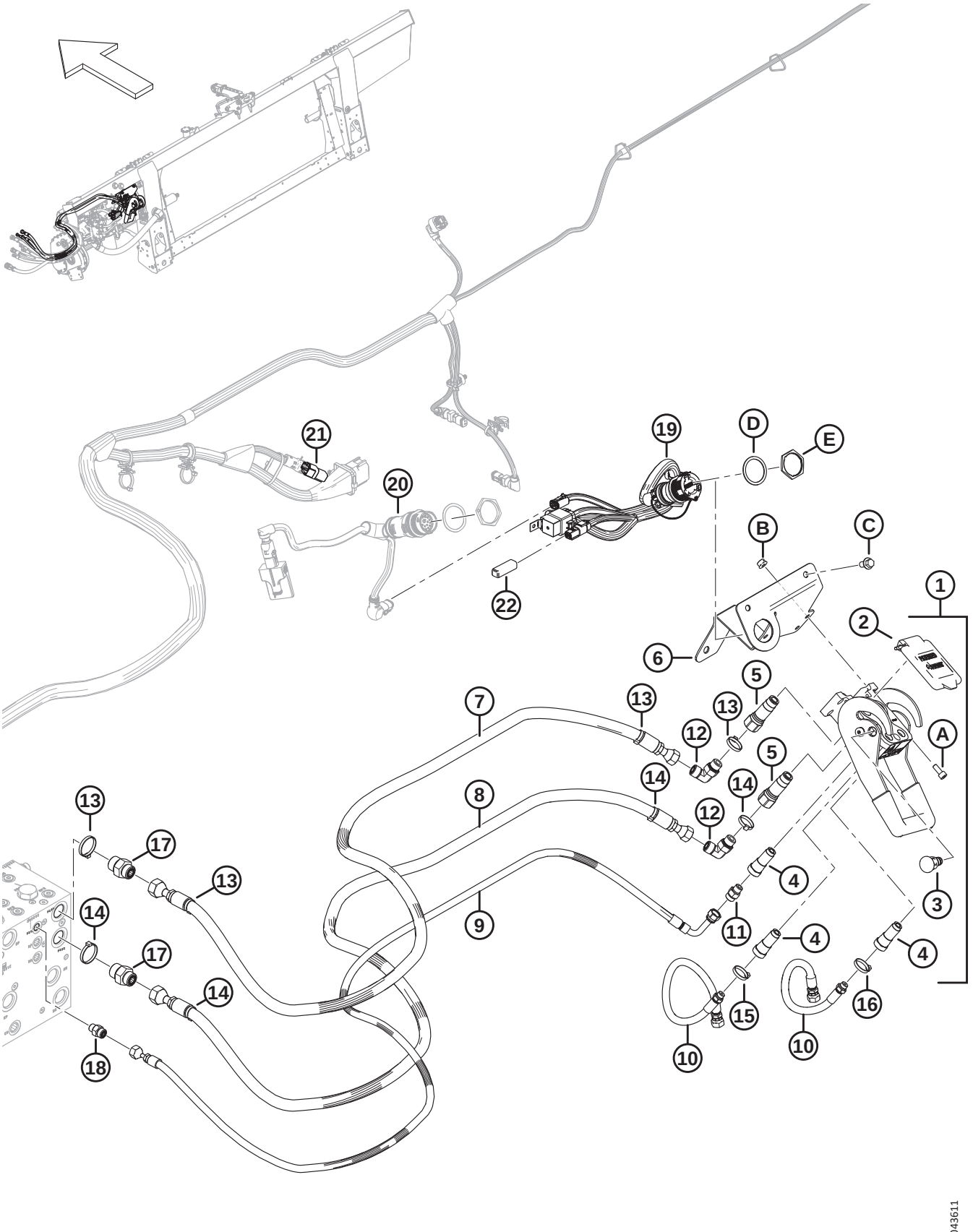

Ref	Part Number	Description	Qty	Serial Number
	B7507	KIT – CNH HYD ELEC COMPLETION [853]		
1	153151	COUPLING – MULTI [854]	1	
2	129800	KIT – COVER CNH MULTI-COUPLER	1	
3	129801	KIT – LATCH BUTTON	1	
4	129976	COUPLING 1/4 IN.	3	
5	129977	COUPLING 3/8 IN.	2	
6	328874	SUPPORT WELDT – CNH MULTI COUPLER	1	
7	314586	HOSE – HYD, REEL DRIVE PRESSURE CNH	1	
8	314587	HOSE – HYD, REEL DRIVE RETURN CNH	1	
9	314588	HOSE – HYD, REEL LIFT, CNH	1	
10	314585	HOSE – HYD, REEL F-A, CNH	2	
11	252694	FITTING – ADAPTER .052 ORIFICE	1	
12	136220	FITTING – ELBOW 90° HYD	2	
	44209	O-RING – Ø2.21 X Ø16.36		
	135866	O-RING – Ø1.78 X Ø12.42		
13	49232	FASTENER – CABLE TIE, WHITE	4	
14	40701	FASTENER – CABLE TIE, YELLOW	4	
15	40702	FASTENER – CABLE TIE, RED	2	
16	49227	FASTENER – CABLE TIE, GREEN	2	
17	135786	FITTING – ADAPTER	2	
	50219	O-RING – Ø1.98 X Ø11.89		
	135865	O-RING – Ø1.78 X Ø9.25		
18	135778	FITTING – ADAPTER	1	
	50219	O-RING – Ø1.98 X Ø11.89		
	135865	O-RING – Ø1.78 X Ø9.25		
19	**284946**	**KIT – CNH ELEC COMP, INTEGRATED** [855]	**1**	
20	REF	HARNESS – CAB ADAPTER [856]	1	
	REF	MODULE – VALVE DRIVER [856]	1	
	REF	WASHER – LOCK, HDP 20, SIZE 24 [856]	1	
	REF	NUT – PANEL, HDP 20, SIZE 24 [856]	1	
21	REF	PLUG – TILT, PASS THRU [857]	1	

853. Kits are available through Whole Goods only.
854. The multicoupler includes CNH multi-coupler cover kit (MD #129800), latch button kit (MD #129801), three 1/4 inch couplings (MD #129976), and two 3/8 inch coupling (MD #129977).
855. The kit includes integration completion harness (NSS), transistor plug (MD #349362), and hardware (MD #134010, MD #134011).
856. For the harness, valve driver module, and hardware, refer to Section *197 Electrical – Base (Integrated Hydraulic System), page 495* or Section *198 Electrical – Base (Modular Hydraulic System), page 497*; required for model year 2018 and prior machines only.
857. The pass-thru tilt plug (MD #323698) connects to the float module's main harness at P600. The float plug comes preinstalled for model year 2024 and later machines configured for Case combines, but it is NOT included in the completion package (B7507). To order the pass-thru tilt plug complete with installation instructions, refer to Section *197 Electrical – Base (Integrated Hydraulic System), page 495* or Section *198 Electrical – Base (Modular Hydraulic System), page 497*.

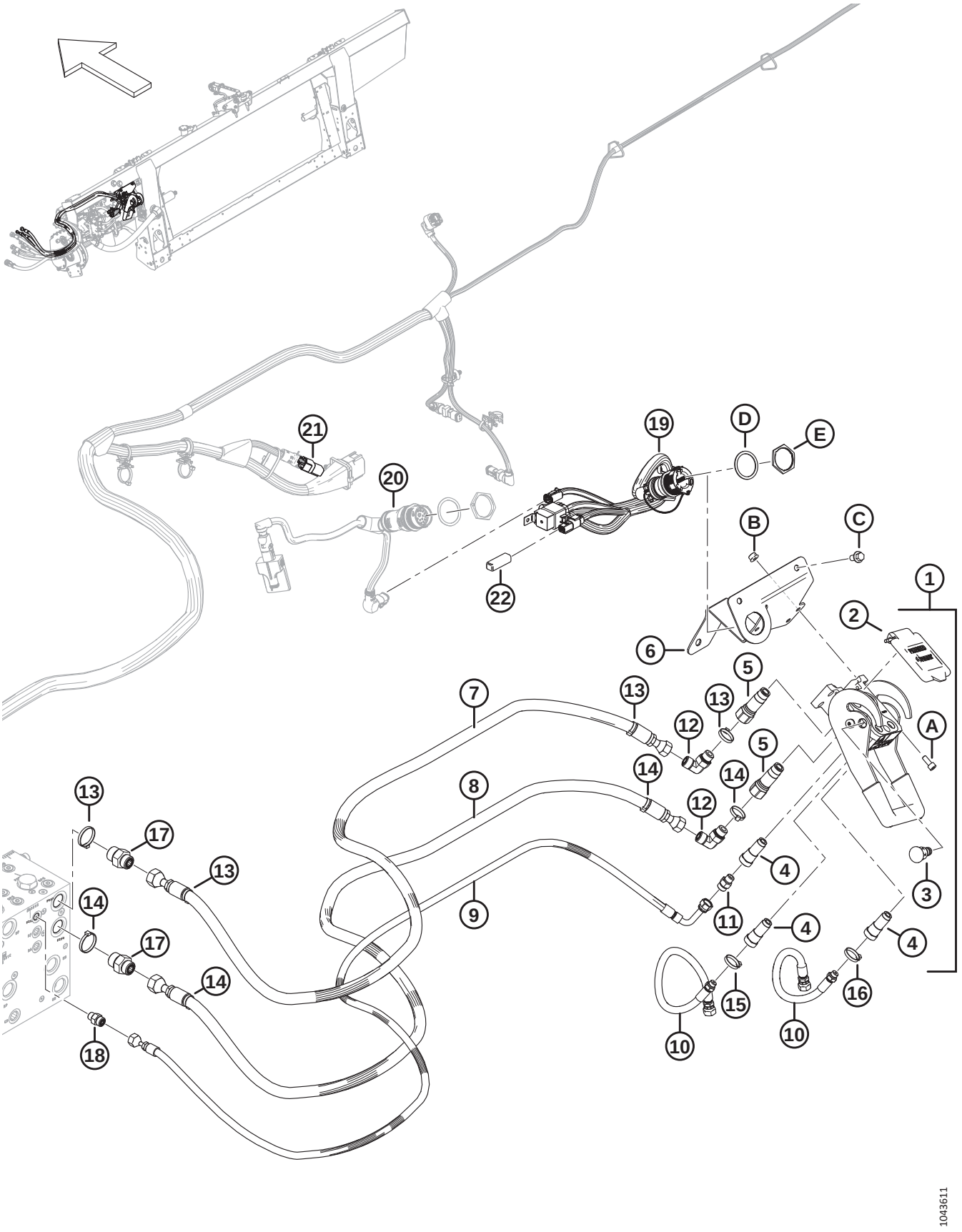
1
2
3
4
5
6
7
8
9
10
11
12
13
14
15
16
17
18
19
20
21
22
A
B
C
D
E
1043611

Ref	Part Number	Description	Qty	Serial Number
22	**349362**	**PLUG – SW PWR TRANSISTOR**	**1**	
A	167307	SCREW – HEX SOC HD M8 X 1.25 X 20-8.8-AA1J		
B	135337	NUT – HEX FLG CTR LK M8 X 1.25-8-AA1J		
C	136151	BOLT – HEX FLG HD TFL M10 X 1.5 X 16-8.8-AA1J		
D	134011	WASHER – LOCK SPRING, DEUTSCH HD, SIZE 24		
E	134010	NUT – PANEL, HD 30, SIZE 24		

208 Case IH 2300/2500 Series – Float Module Completion

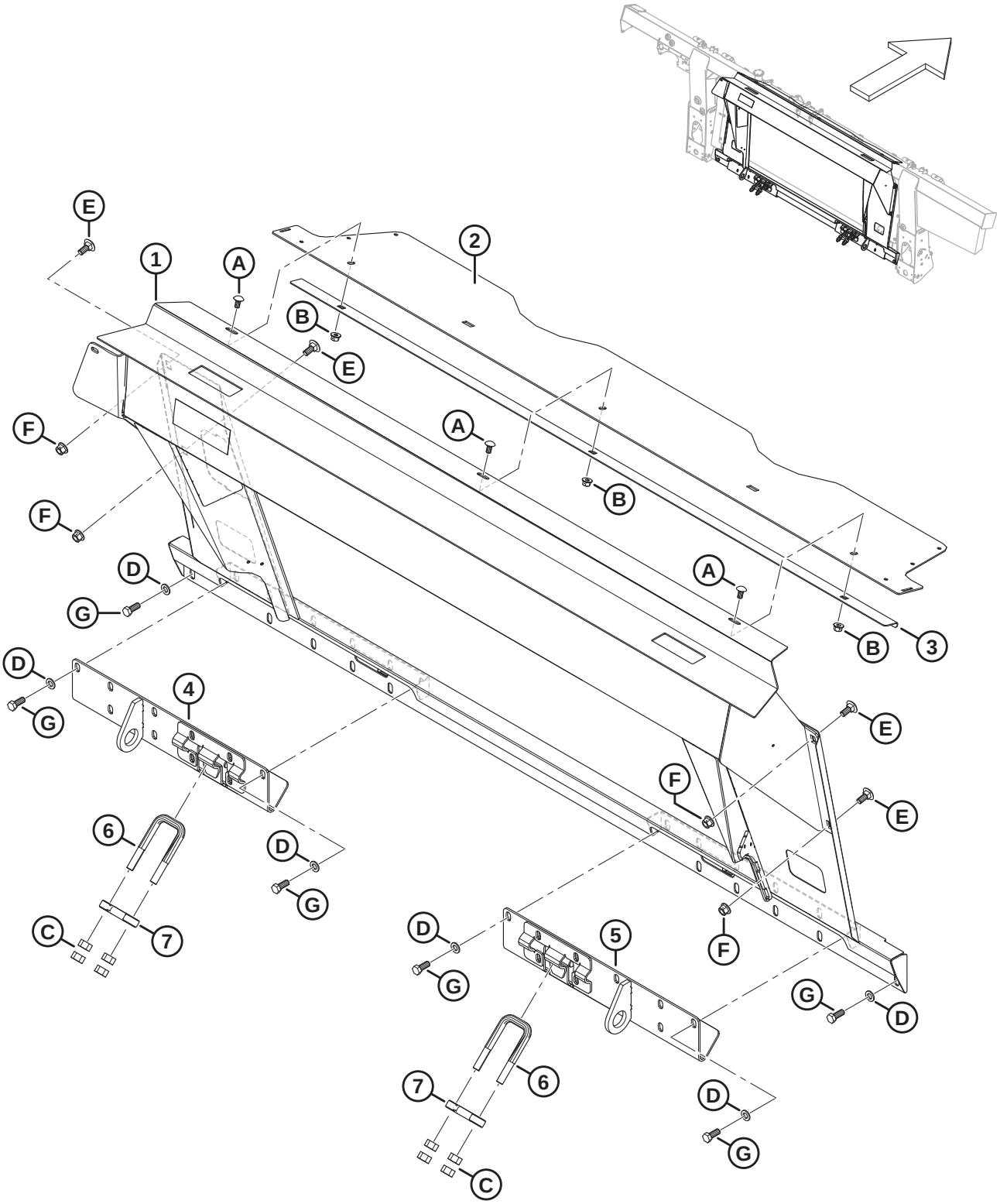

Ref	Part Number	Description	Qty	Serial Number
	B7315	KIT – CIH 23/25 TRANSITION FRAME [858]		
1	347731	FRAME – CIH W/ DECAL	1	
2	357195	COVER – FEED AUGER TOP	1	
3	301629	RETAINER – DUST COVER	1	
4	347964	ANCHOR – WELDT LH	1	
5	347965	ANCHOR – WELDT RH	1	
6	133242	BOLT – U	2	
7	133241	LATCH – 2300 SERIES COMBINE	2	
A	184657	BOLT – RHSSN M10 X 1.5 X 20-8.8-AA1J		
B	135799	NUT – HEX FLG CTR LOC M10 X 1.5-10		
C	18592	NUT – HEX 5/8-11 UNC-GR 5-ZINC		
D	184714	WASHER – FLAT REG M12-300HV		
E	184667	BOLT – RHSN M12 X 1.75 X 30-8.8-ZINC		
F	136431	NUT – HEX FLG CTR LOC M12 X 1.75-10		
G	30630	BOLT – HEX HD TFL M12 X 1.75 X 30-8.8-A3L		

858. Kits are available through Whole Goods only.

209 Case IH 2300/2500 Series – Hydraulic/Electrical Completion

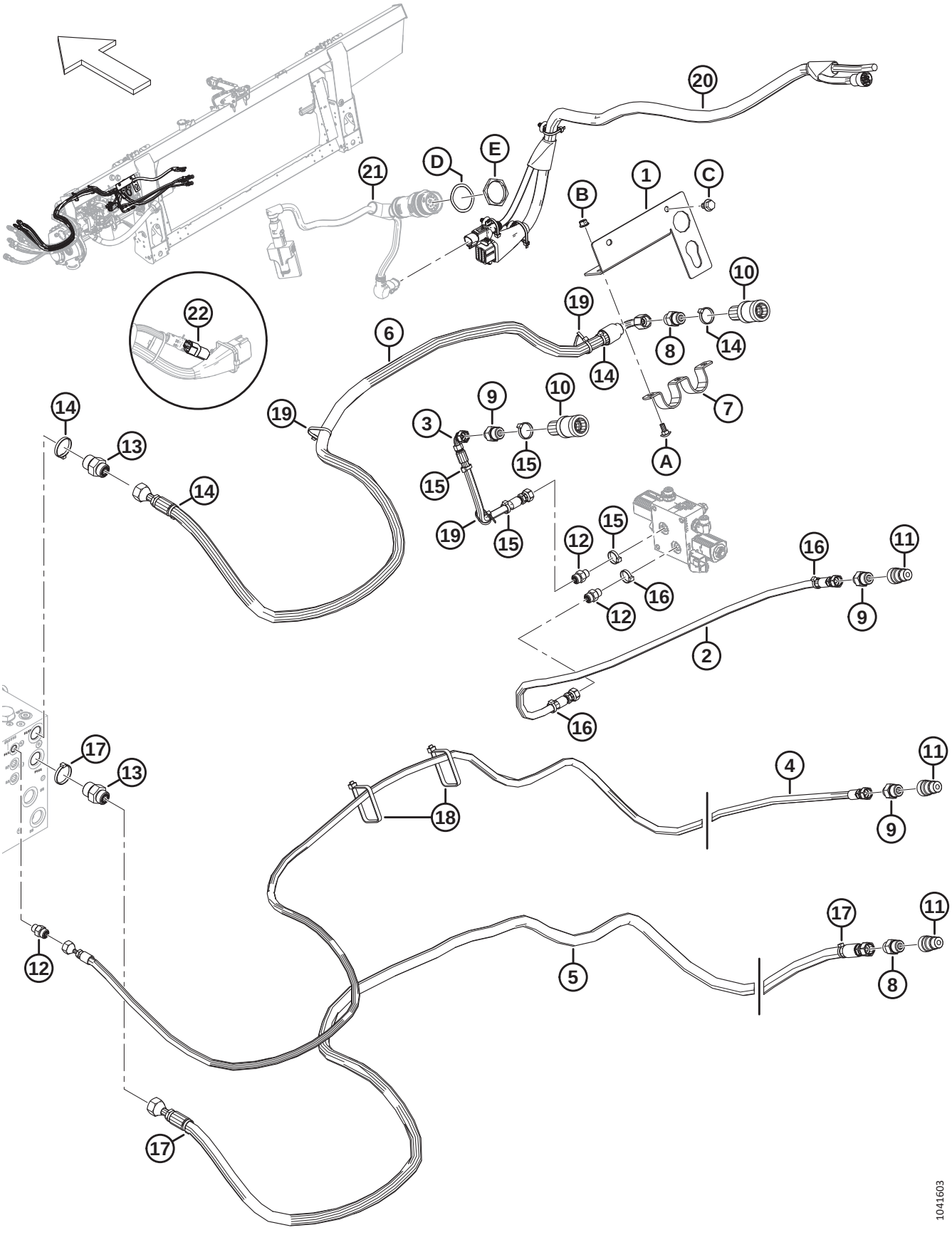

Ref	Part Number	Description	Qty	Serial Number
	B7316	KIT – CIH 23/25 HYD/ELEC [859]		
1	347796	SUPPORT – CONNECTOR	1	
2	323387	HOSE – HYD	1	
3	323386	HOSE – HYD	1	
4	323385	HOSE – HYD	1	
5	323384	HOSE – HYD	1	
6	323383	HOSE – HYD	1	
7	322695	HOLDER	1	
8	184463	FITTING – ADAPTER HYD	2	
	44210	O-RING – 2.46 X 19.18		
	135866	O-RING – 1.78 X 12.42		
9	184462	FITTING – ADAPTER HYD	3	
10	114143	FITTING – COUPLING HYD	2	
11	114142	FITTING – COUPLING HYD	3	
12	135778	FITTING – ADAPTER	3	
	50219	O-RING – 1.98 X 11.89		
	135865	O-RING – 1.78 X 9.25		
13	135786	FITTING – ADAPTER	2	
	50219	O-RING – Ø1.98 X Ø11.89		
	135865	O-RING – Ø1.78 X Ø9.25		
14	49232	FASTENER – CABLE TIE, WHITE	4	
15	49227	FASTENER – CABLE TIE, GREEN	4	
16	40702	FASTENER – CABLE TIE, RED	3	
17	40701	FASTENER – CABLE TIE, YELLOW	3	
18	30753	FASTENER – CABLE TIE, BLACK	2	
19	21763	FASTENER – CABLE TIE, BLACK	3	
20	335663	HARNESS – COMP CIH 23XX/25XX	1	
21	REF	HARNESS – CAB ADAPTER [860]	1	
	REF	MODULE – VALVE DRIVER [860]	1	
22	REF	PLUG – FLOAT CONFIG. 1 SENSOR (AUTO HEADER HEIGHT) [861]	1	
A	197171	BOLT – RHSN M8 X 1.25 X 20-8.8-ZINC		
B	135337	NUT – HEX FLG CTR LK M8 X 1.25-8-AA1J		
C	136151	BOLT – HEX FLG HD TFL M10 X 1.5 X 16-8.8-AA1J		
D	134730	WASHER – LOCK, HDP 20, SIZE 24		
E	134728	NUT – PANEL, HDP 20, SIZE 24		

859. Kits are available through Whole Goods only.
860. For the adapter harness, valve driver module, and hardware, refer to Section *197 Electrical – Base (Integrated Hydraulic System), page 495* or Section *198 Electrical – Base (Modular Hydraulic System), page 497*.
861. The auto header height float plug (MD #328560) connects to the float module's main harness at P600. The float plug is required when converting from the incomplete configuration or from machines configured for Case combines, but it is NOT included in the completion package (B7316). To order the float plug complete with installation instructions, refer to Section *197 Electrical – Base (Integrated Hydraulic System), page 495* or Section *198 Electrical – Base (Modular Hydraulic System), page 497*.

210 CLAAS – Float Module Completion

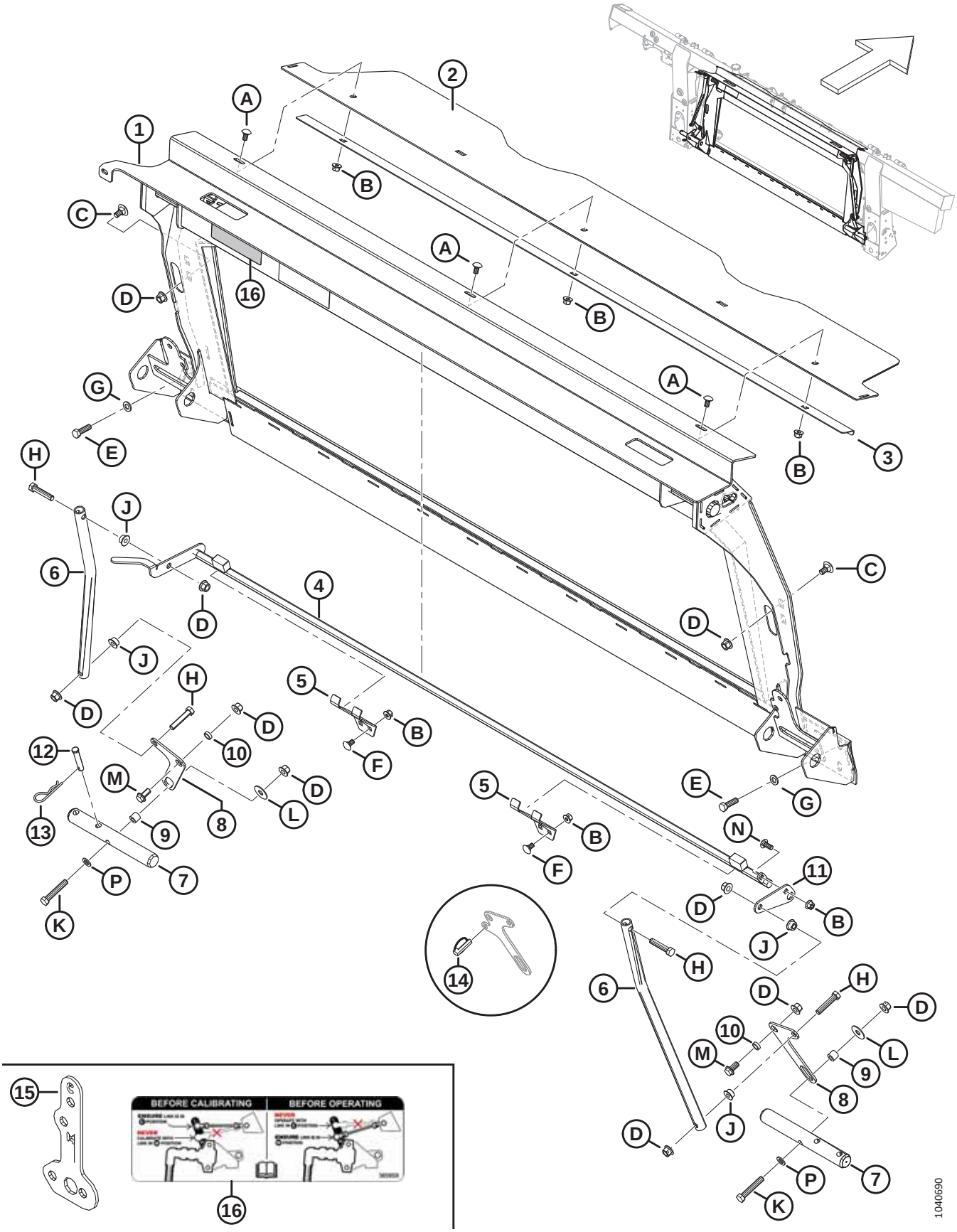

Ref	Part Number	Description	Qty	Serial Number
	B7045	KIT – CLAAS TRANSITION FRAME [862]		
1	347077	FRAME – CLAAS TRNSN W/ DECAL	1	
2	357195	COVER – FEED AUGER TOP	1	
3	301629	RETAINER – DUST COVER	1	
4	335849	LATCH – WELDMENT	1	
5	245246	SUPPORT – LOCK KEEPER	2	
6	156783	TUBE – LINK	2	
7	133138	SHAFT	2	
8	304669	LEVER – PIVOT	2	
9	337043	BUSHING – M12 THREADED	2	
10	133439	SPACER – 0.75 OD X 0.120 IN WALL	2	
11	328582	LEVER	1	
12	19809	PIN – CLEVIS	1	
13	13125	PIN – HAIR	1	
14	113561	PIN – LYNCH [863]	A/R	
15	357776	ARM – CLAAS FORE/AFT CENTER LINK	1	
16	360859	DECAL – CLAAS TILT SENSOR LINK	1	
A	184657	BOLT – RHSSN M10 X 1.5 X 20-8.8-AA1J		
B	135799	NUT – HEX FLG CTR LOC M10 X 1.5-10		
C	135903	BOLT – RHSN M12 X 1.75 X 25-8.8-ZINC		
D	136431	NUT – HEX FLG CTR LOC M12 X 1.75-10		
E	184669	BOLT – HEX HD M12 X 1.75 X 40-8.8-AA1J		
F	136178	BOLT – RHSN M10 X 1.5 X 20-8.8-AA1J		
G	184714	WASHER – FLAT REG M12-300HV		
H	237316	BOLT – HEX HD TFL M12 X 1.75 X 60-8.8-AA1J		
J	136036	NUT – HEX SM FLG M12 X 1.75-8-AA1J		
K	184675	BOLT – HEX HD M12 X 1.75 X 70-8.8-AA1J		
L	32247	WASHER – FLAT		
M	136625	BOLT – HEX SER FLG HD M12 X 1.75 X 25 X SPCL-100-AA1J		
N	136506	BOLT – RHSSN M10 X 1.5 X 25-8.8-AA1J		
P	184714	WASHER – FLAT REG M12-300HV		

862. Kits are available through Whole Goods only.
863. Service part only for 2022 and prior units with superseded pivot lever (MD #347569).

211 CLAAS – Hydraulic/Electrical Completion (2022 and Prior)

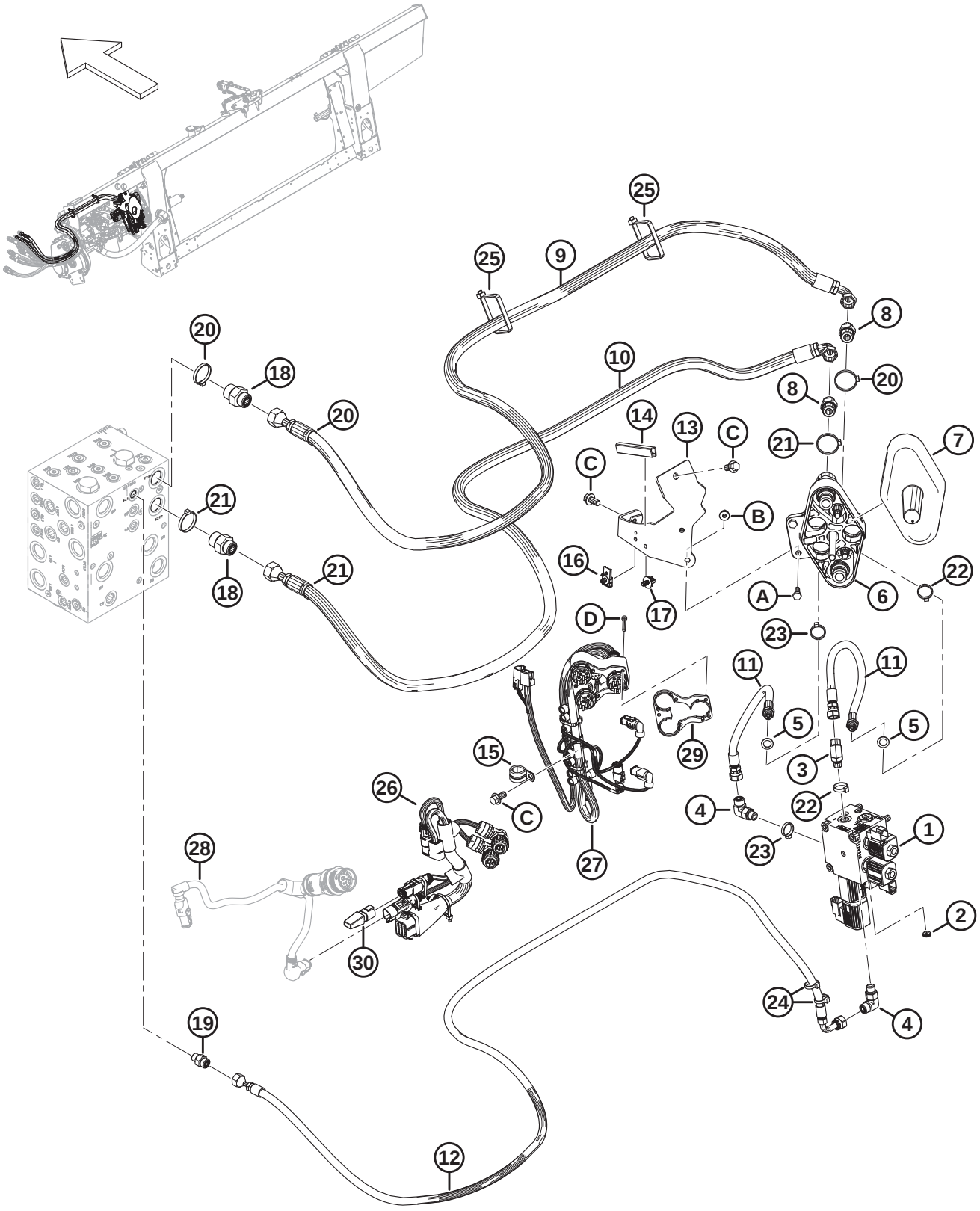

Ref	Part Number	Description	Qty	Serial Number
	B7058	KIT – CLAAS/LEXION HYD ELEC COMPLETION [864]		
	REF	KIT – CLAAS/LEXION HYD COMPLETION [865]		
	REF	KIT – CLAAS/LEXION ELEC COMPLETION [866]		
1	328548	VALVE – SELECTOR, CLAAS	1	
	287456	VALVE – 3-POS 4-WAY		
	287460	VALVE – NC POPPET		
	287461	COIL – 12VDC - .500 IN.		
	287462	COIL – 12VDC - .625 IN.		
	279228	VALVE – CARTRIDGE, PO CHECK		
	320284	O-RING – 2.38 X 20.64		
	136108	SCREW – HEX SOC HD M10 X 1.5 X 80-12.9-AA1J	3	
	184711	WASHER – FLAT REG M10-200HV-AA1J	3	
2	252693	RESTRICTOR – #6 ORB X .052 IN.	1	
3	136144	FITTING – ELBOW 45° HYD	1	
4	136095	FITTING – ELBOW 90° HYD	2	
	135865	O-RING – Ø1.78 X Ø9.25		
	50219	O-RING – Ø1.98 X Ø11.89		
5	320195	SEAL – BONDED WASHER	2	
6	190866	COUPLER – LEXION MULTI LINK	1	
7	129481	COVER	1	
8	184463	FITTING – ADAPTER HYD	2	
	44210	O-RING – Ø2.46 X Ø19.18		
	135866	O-RING – Ø1.78 X Ø12.42		
9	314821	HOSE – HYD, REEL PRESSURE CLAAS	1	
10	314820	HOSE – HYD, REEL RETURN CLAAS	1	
11	314819	HOSE – HYD, REEL POSITION CLAAS	2	
12	314817	HOSE – HYD, REEL LIFT CLAAS	1	
13	347954	SUPPORT – COUPLER WELDMENT	1	
14	162116	SEAL – EDGE TRIM	1	
15	135709	CLAMP – INSULATED 3/4 IN.	1	
16	134612	CLIP – RECEPTACLE MOUNT	1	
17	136655	FASTENER – FIR TREE MT W/ TIE	1	
18	135786	FITTING – ADAPTER	2	
	50219	O-RING – Ø1.98 X Ø11.89		
	135865	O-RING – Ø1.78 X Ø9.25		

864. Kit (B7058) is not current after model year 2022 and has been replaced with hydraulic completion kit (B7406) and electrical completion kit (B7405) for model year 2023 and later. Kits are available through Whole Goods only.
865. For model year 2023 and later CLAAS hydraulic completion kit service parts, refer to Section *212 CLAAS – Hydraulic Completion (2023 and Later), page 537*.
866. For model year 2023 and later CLAAS electrical completion kit service parts, refer to Section *213 CLAAS – Electrical Completion (2023 and Later), page 541*.

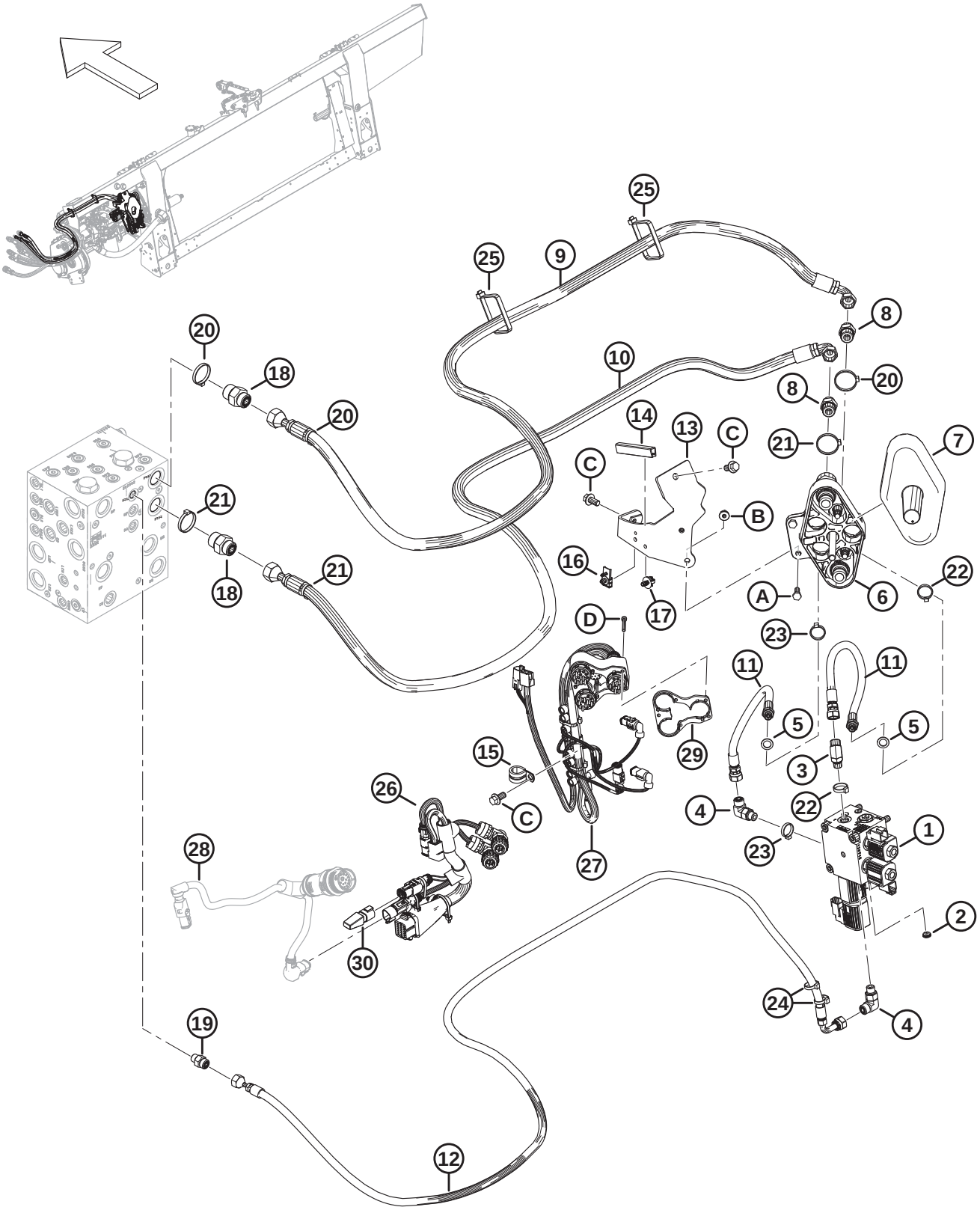
1039482

Ref	Part Number	Description	Qty	Serial Number
19	135778	FITTING – ADAPTER	1	
	50219	O-RING – Ø1.98 X Ø11.89		
	135865	O-RING – Ø1.78 X Ø9.25		
20	49232	FASTENER – CABLE TIE, WHITE	3	
21	40701	FASTENER – CABLE TIE, YELLOW	3	
22	40704	FASTENER – CABLE TIE, ORANGE	2	
23	40703	FASTENER – CABLE TIE, BLUE	2	
24	21763	FASTENER – CABLE TIE, BLACK	2	
25	30753	FASTENER – CABLE TIE, BLACK	2	
26	335431	HARNESS – COMP., CLAAS	1	
27	323936	HARNESS – COUPLER, CLAAS [867]	1	
	213824	HARNESS – LEXION COUPLER MOD [868]		
	129772	HARNESS – WIRING, CLAAS [868]		
28	REF	HARNESS – CAB ADAPTER [869]	1	
	REF	MODULE – VALVE DRIVER [869]	1	
	REF	WASHER – LOCK, HDP 20, SIZE 24 [869]	1	
	REF	NUT – PANEL, HDP 20, SIZE 24 [869]	1	
29	129773	SPACER – WIRING HARNESS	1	
30	283215	DIODE PACK – 6A DIODE [870]	1	
	REF	KIT – INTEGRATION, CLAAS [871]	1	
A	184652	BOLT – HEX HD TFL M8 X 1.25 X 25-8.8-AA1J		
B	135337	NUT – HEX FLG CTR LK M8 X 1.25-8-AA1J		
C	152655	BOLT – HEX FLG HD M10 X 1.5 X 20-8.8-AA1J		
D	129965	SCREW – HEX SOC HD M5 X 0.8 X 45		

867. Includes harness MD #213824 and harness MD #129772.
868. Service part for CLAAS harness MD #323936.
869. For the harness, valve driver module, and hardware, refer to Section *197 Electrical – Base (Integrated Hydraulic System), page 495* or Section *198 Electrical – Base (Modular Hydraulic System), page 497*.
870. Service part for CLAAS completion harness MD #335431.
871. The CLAAS integration kit is available as an option for model year 2022 and prior machines. For service parts, refer to Section *233 (Option) Integration Kit – CLAAS, page 591*.

212 CLAAS – Hydraulic Completion (2023 and Later)

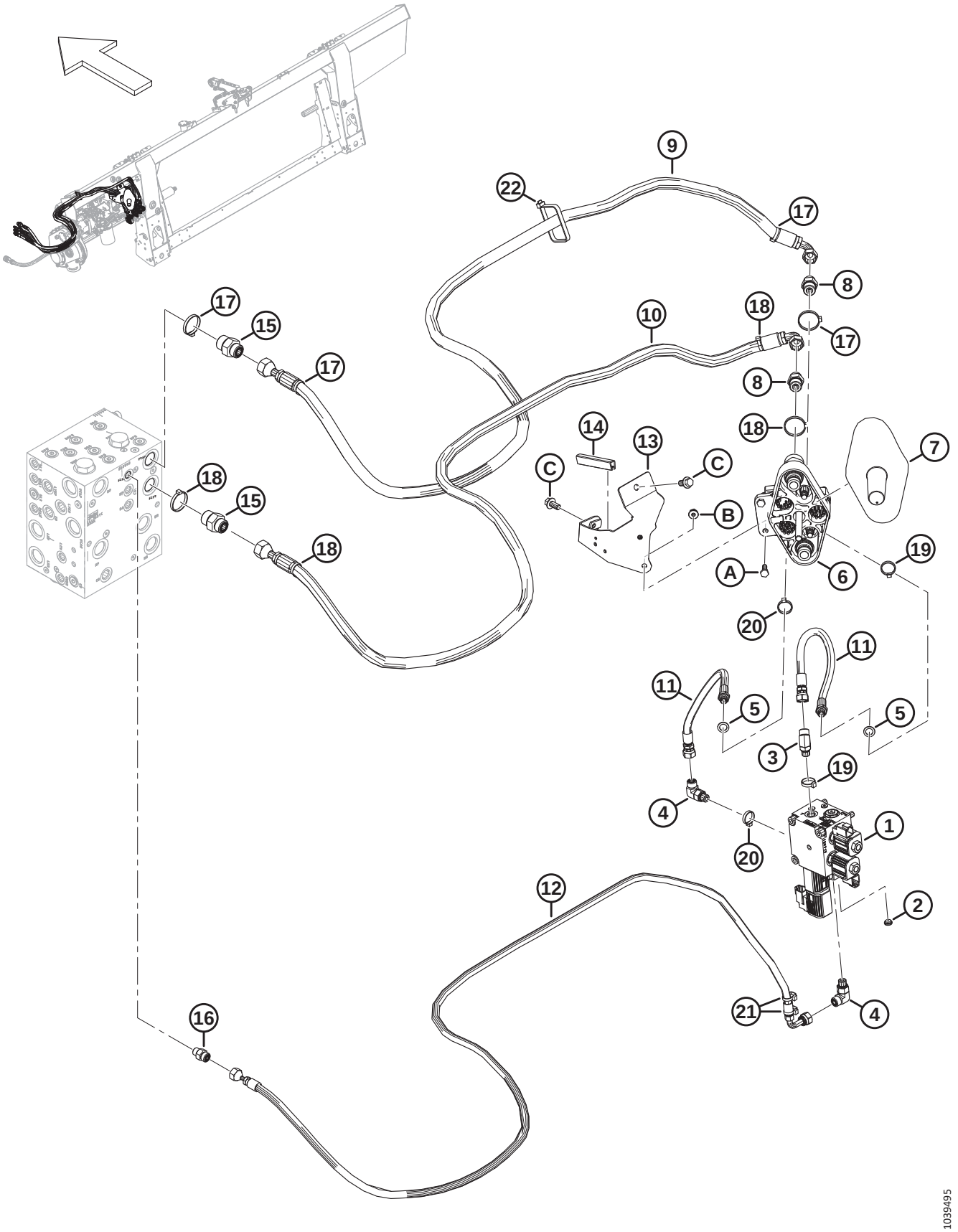

Ref	Part Number	Description	Qty	Serial Number
	B7406	KIT – CLAAS/LEXION HYD COMPLETION [872]		
1	328548	VALVE – SELECTOR, CLAAS	1	
	287456	VALVE – 3-POS 4-WAY		
	287460	VALVE – NC POPPET		
	287461	COIL – 12VDC - .500 IN.		
	287462	COIL – 12VDC - .625 IN.		
	279228	VALVE – CARTRIDGE, PO CHECK		
	320284	O-RING – 2.38 X 20.64		
	136108	SCREW – HEX SOC HD M10 X 1.5 X 80-12.9-AA1J	3	
	184711	WASHER – FLAT REG M10-200HV-AA1J	3	
2	252693	RESTRICTOR – #6 ORB X .052 IN.	1	
3	136144	FITTING – ELBOW 45° HYD	1	
4	136095	FITTING – ELBOW 90° HYD	2	
	135865	O-RING – Ø1.78 X Ø9.25		
	50219	O-RING – Ø1.98 X Ø11.89		
5	320195	SEAL – BONDED WASHER	2	
6	190866	COUPLER – LEXION MULTI LINK	1	
7	129481	COVER	1	
8	184463	FITTING – ADAPTER HYD	2	
	44210	O-RING – Ø2.46 X Ø19.18		
	135866	O-RING – Ø1.78 X Ø12.42		
9	314821	HOSE – HYD, REEL PRESSURE CLAAS	1	
10	314820	HOSE – HYD, REEL RETURN CLAAS	1	
11	314819	HOSE – HYD, REEL POSITION CLAAS	2	
12	314817	HOSE – HYD, REEL LIFT CLAAS	1	
13	347954	SUPPORT – COUPLER WELDMENT	1	
14	162116	SEAL – EDGE TRIM	1	
15	135786	FITTING – ADAPTER [873]	2	
	50219	O-RING – Ø1.98 X Ø11.89		
	135865	O-RING – Ø1.78 X Ø9.25		
16	135778	FITTING – ADAPTER [873]	1	
	50219	O-RING – Ø1.98 X Ø11.89		
	135865	O-RING – Ø1.78 X Ø9.25		
17	49232	FASTENER – CABLE TIE, WHITE	3	
18	40701	FASTENER – CABLE TIE, YELLOW	3	
19	40704	FASTENER – CABLE TIE, ORANGE	2	
20	40703	FASTENER – CABLE TIE, BLUE	2	
21	21763	FASTENER – CABLE TIE, BLACK	2	
22	30753	FASTENER – CABLE TIE, BLACK [873]	1	

872. Kits are available through Whole Goods only.
873. This part is installed at the factory and is **NOT** included in the hydraulic completion kit (B7406).

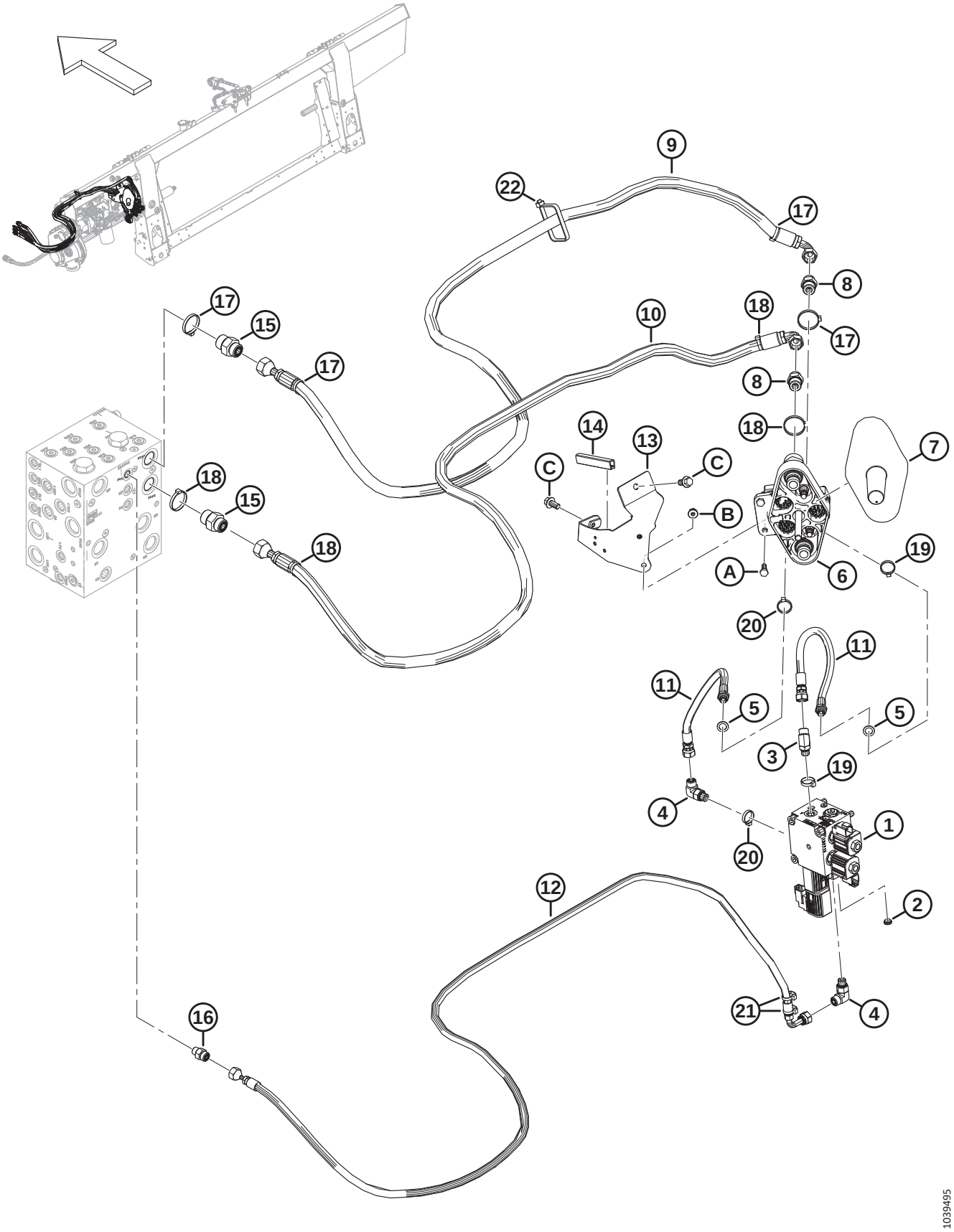
9
22
17
8
17
10
18
17
15
17
8
18
14
13
C
C
7
18
15
B
18
A
6
19
20
11
11
5
5
3
19
4
20
1
12
2
21
4
16
1039495

Ref	Part Number	Description	Qty	Serial Number
A	184652	BOLT – HEX HD TFL M8 X 1.25 X 25-8.8-AA1J		
B	135337	NUT – HEX FLG CTR LK M8 X 1.25-8-AA1J		
C	152655	BOLT – HEX FLG HD M10 X 1.5 X 20-8.8-AA1J		

213 CLAAS – Electrical Completion (2023 and Later)

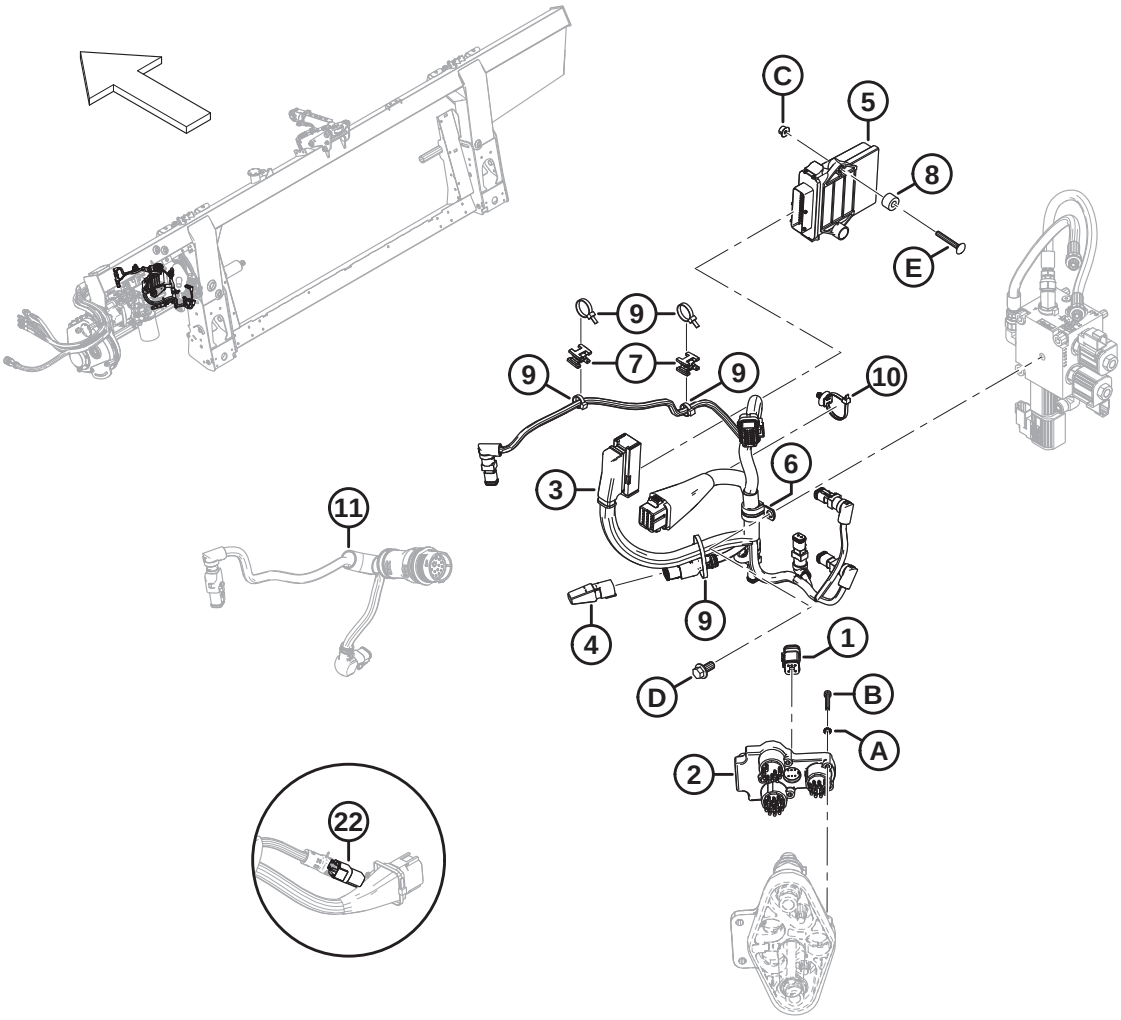

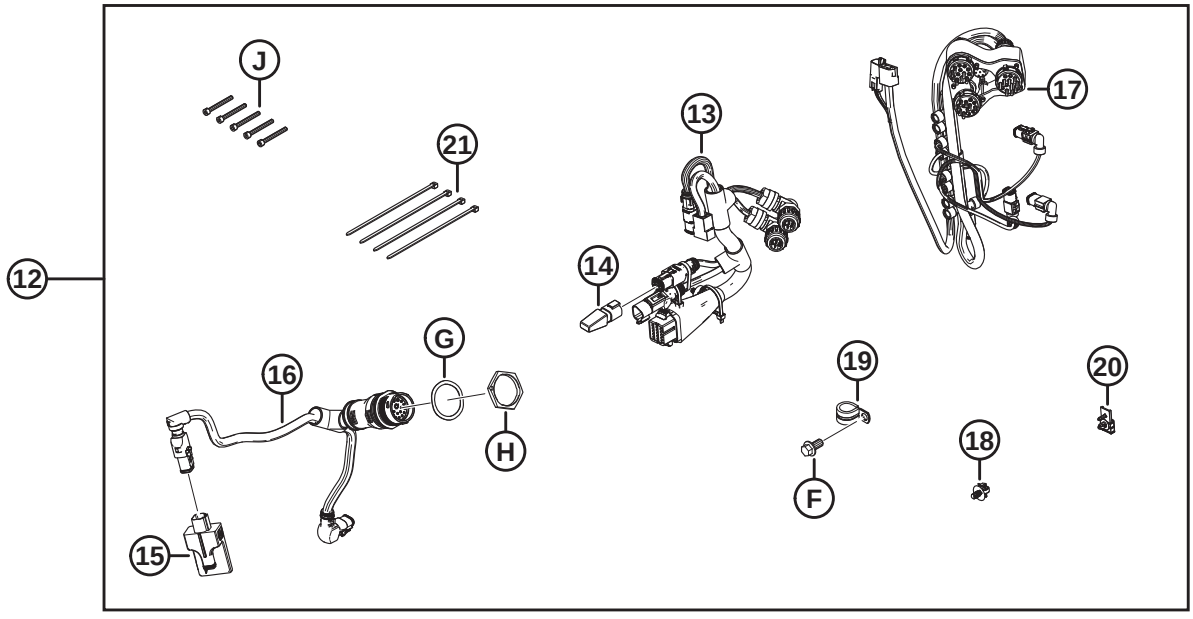

1041695

Ref	Part Number	Description	Qty	Serial Number
1	337352	PLUG – TERMINATOR	1	
2	500605	COUPLER MODULE	1	
3	357119	HARNESS – FM2 COMP, CLAAS INTEGRATION CONTROLLER	1	
4	283215	DIODE PACK – 6A DIODE [874]	1	
5	328065	MODULE – HEADER INTEGRATION	1	
6	135709	CLAMP – INSULATED 3/4 IN.	1	
7	134442	SPACER – DUAL SWIVEL SADDLE	2	
8	328913	SPACER	2	
9	21763	FASTENER – CABLE TIE, BLACK	5	
10	136655	FASTENER – FIR TREE MT W/ TIE	1	
11	REF	HARNESS – CAB ADAPTER [875]	1	
12	B7405	KIT – CLAAS/LEXION ELEC COMPLETION [876]	A/R	
13	335431	HARNESS – COMP., CLAAS	1	
14	283215	DIODE PACK – 6A DIODE [877]	1	
15	328411	MODULE – VALVE DRIVER	1	
16	322383	HARNESS – CAB ADAPTER	1	
17	323936	HARNESS – COUPLER, CLAAS [878]	1	
	213824	HARNESS – LEXION COUPLER MOD [879]		
	129772	HARNESS – WIRING, CLAAS [879]		
18	136655	FASTENER – FIR TREE MT W/ TIE	1	
19	135709	CLAMP – INSULATED 3/4 IN.	1	
20	134612	CLIP – RECEPTACLE MOUNT	1	
21	21763	FASTENER – CABLE TIE, BLACK	4	
22	REF	PLUG – FLOAT CONFIG. 2 SENSOR (LATERAL TILT) [880]	1	
A	184703	WASHER – EXT LK TOOTH M5-200HV-AF0C		
B	173117	SCREW – HEX SOC HD M5 X 0.8 X 35-8.8-AA1J		
C	152668	NUT – HEX FLG CTR LOC M6 X 1-8		
D	152655	BOLT – HEX FLG HD M10 X 1.5 X 20-8.8-AA1J		
E	136731	BOLT – RHSN M6 X 1 X 45-8.8-AA1J		
F	152655	BOLT – HEX FLG HD M10 X 1.5 X 20-8.8-AA1J		
G	134730	WASHER – LOCK, HDP 20, SIZE 24		

874. Service part for CLAAS completion harness MD #337119.
875. For the harness, valve driver module, and hardware, refer to Section *197 Electrical – Base (Integrated Hydraulic System), page 495* or Section *198 Electrical – Base (Modular Hydraulic System), page 497*.
876. Kits are available through Whole Goods only.
877. Service part for CLAAS completion harness MD #335431.
878. Includes harness MD #213824 and harness MD #129772.
879. Service part for CLAAS harness MD #323936.
880. The lateral tilt float plug (MD #328318) connects to the float module's main harness at P600. The float plug comes preinstalled for model year 2024 and later machines configured for CLAAS combines, but it is NOT included in the completion package (B7405). To order the float plug complete with installation instructions, refer to Section *197 Electrical – Base (Integrated Hydraulic System), page 495* or Section *198 Electrical – Base (Modular Hydraulic System), page 497*.

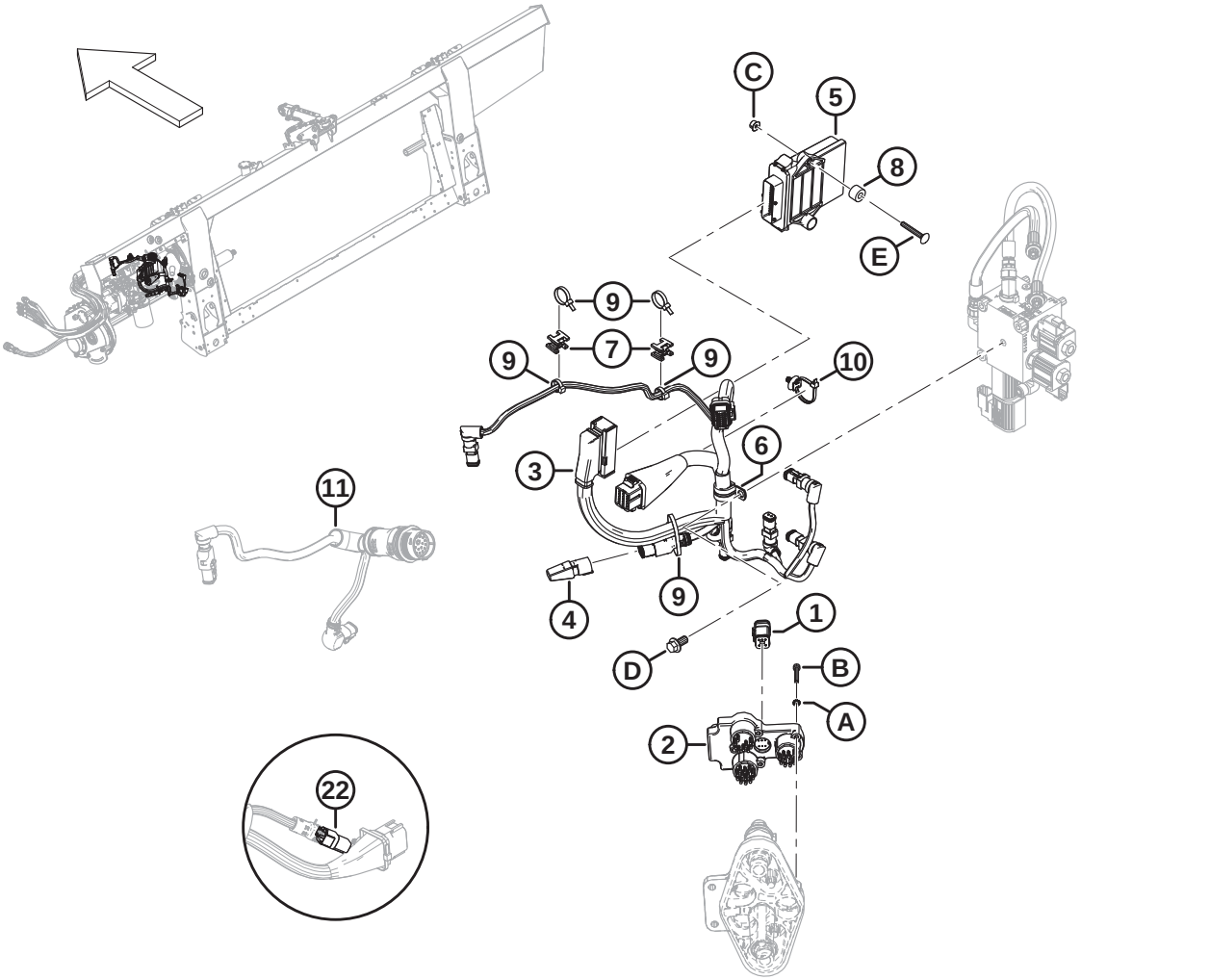

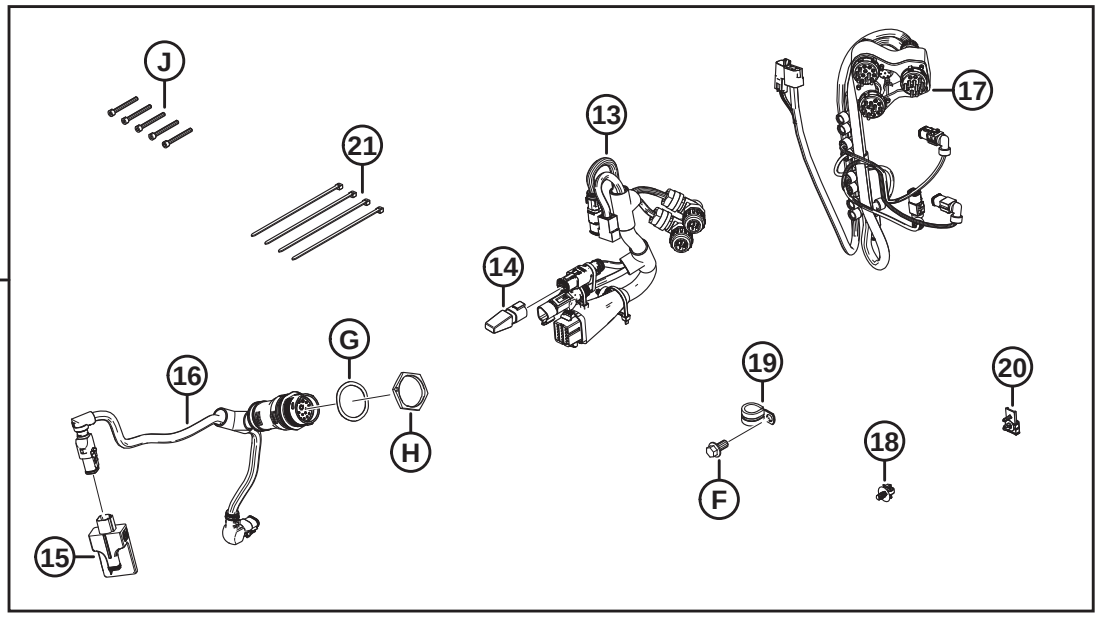

1041695

Ref	Part Number	Description	Qty	Serial Number
H	134728	NUT – PANEL, HDP 20, SIZE 24		
J	129965	SCREW – HEX SOC HD M5 X 0.8 X 45		

214 CLAAS – Auger Completion

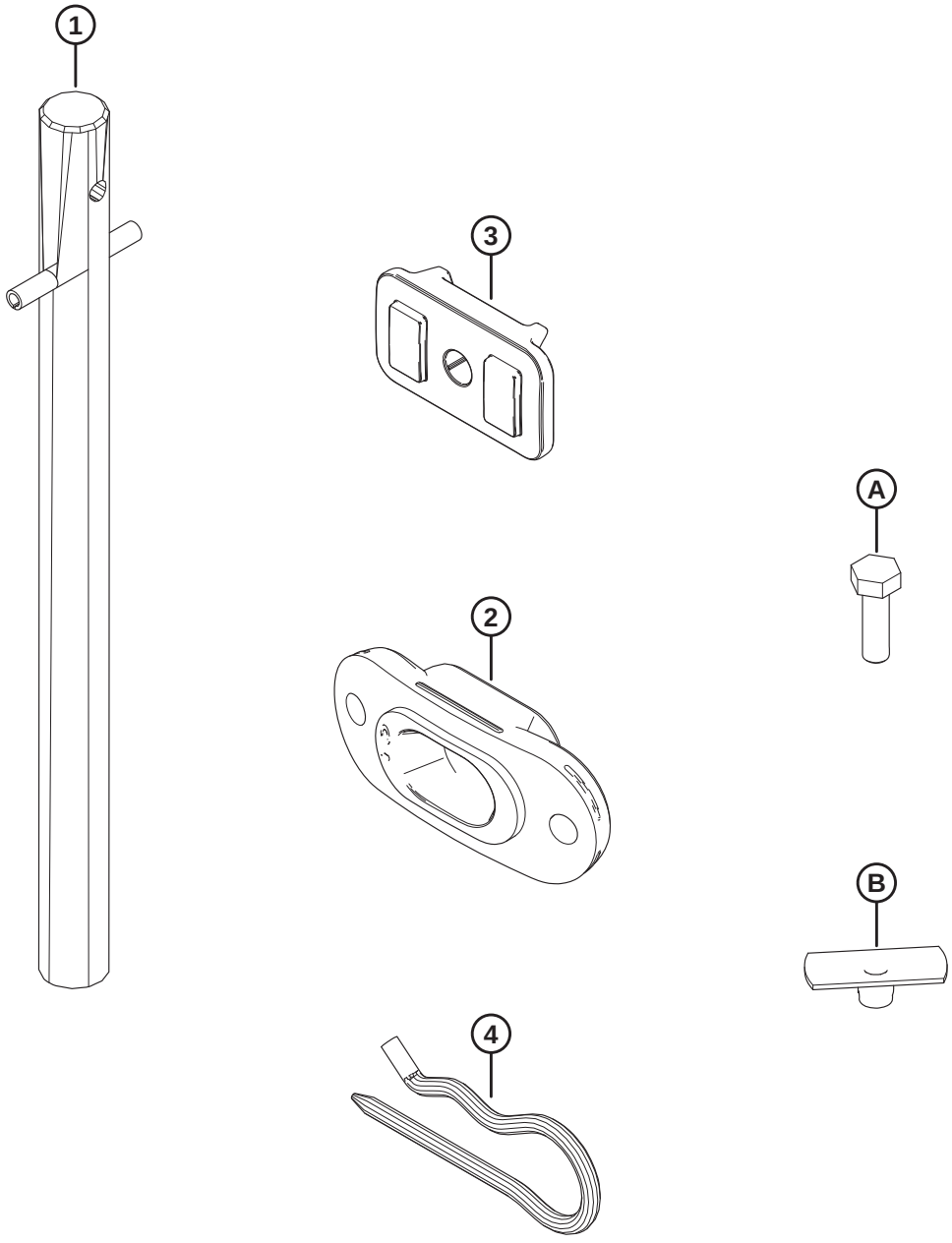

1032782

Ref	Part Number	Description	Qty	Serial Number
1	337152	KIT – FINGER	8	
	7642	PIN – SPRING 3/16 DIA X 1.5 LG	8	
2	337143	GUIDE	8	
3	213084	PLUG – FLIGHTING SLOT	8	
4	123180	PIN – HAIR	8	
A	252703	BOLT – HEX HD TFL M6 X 1 X 20 X SPCL-12.9-AF0C		
B	197263	NUT – TEE M6 X 1		

215 John Deere S Series – Float Module Completion

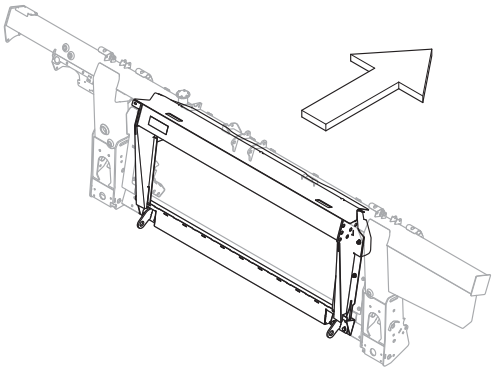

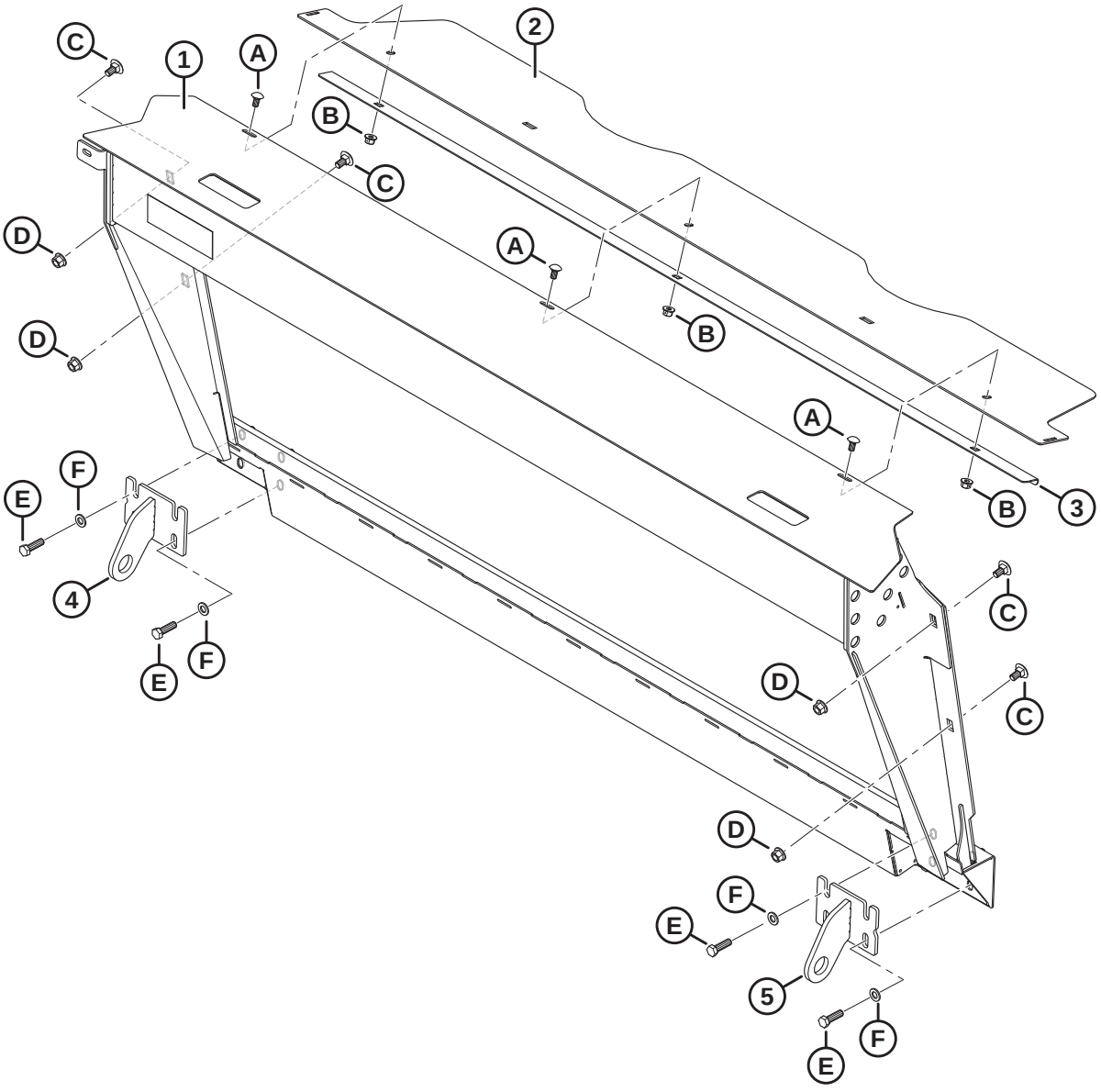

1034919

Ref	Part Number	Description	Qty	Serial Number
	B7044	KIT – JD-S TRANSITION FRAME [881]		
1	347301	TRANS FRAME W/ DECAL – ASSY, JD CM	1	
2	357195	COVER – FEED AUGER TOP	1	
3	301629	RETAINER – DUST COVER	1	
4	347179	ANCHOR – WELDT LH	1	
5	347180	ANCHOR – WELDT RH	1	
A	184657	BOLT – RHSSN M10 X 1.5 X 20-8.8-AA1J		
B	135799	NUT – HEX FLG CTR LOC M10 X 1.5-10		
C	135903	BOLT – RHSN M12 X 1.75 X 25-8.8-ZINC		
D	136431	NUT – HEX FLG CTR LOC M12 X 1.75-10		
E	184669	BOLT – HEX HD M12 X 1.75 X 40-8.8-AA1J		
F	184714	WASHER – FLAT REG M12-300HV		

881. Kits are available through Whole Goods only.

216 John Deere S and T Series – Hydraulic/Electrical Completion

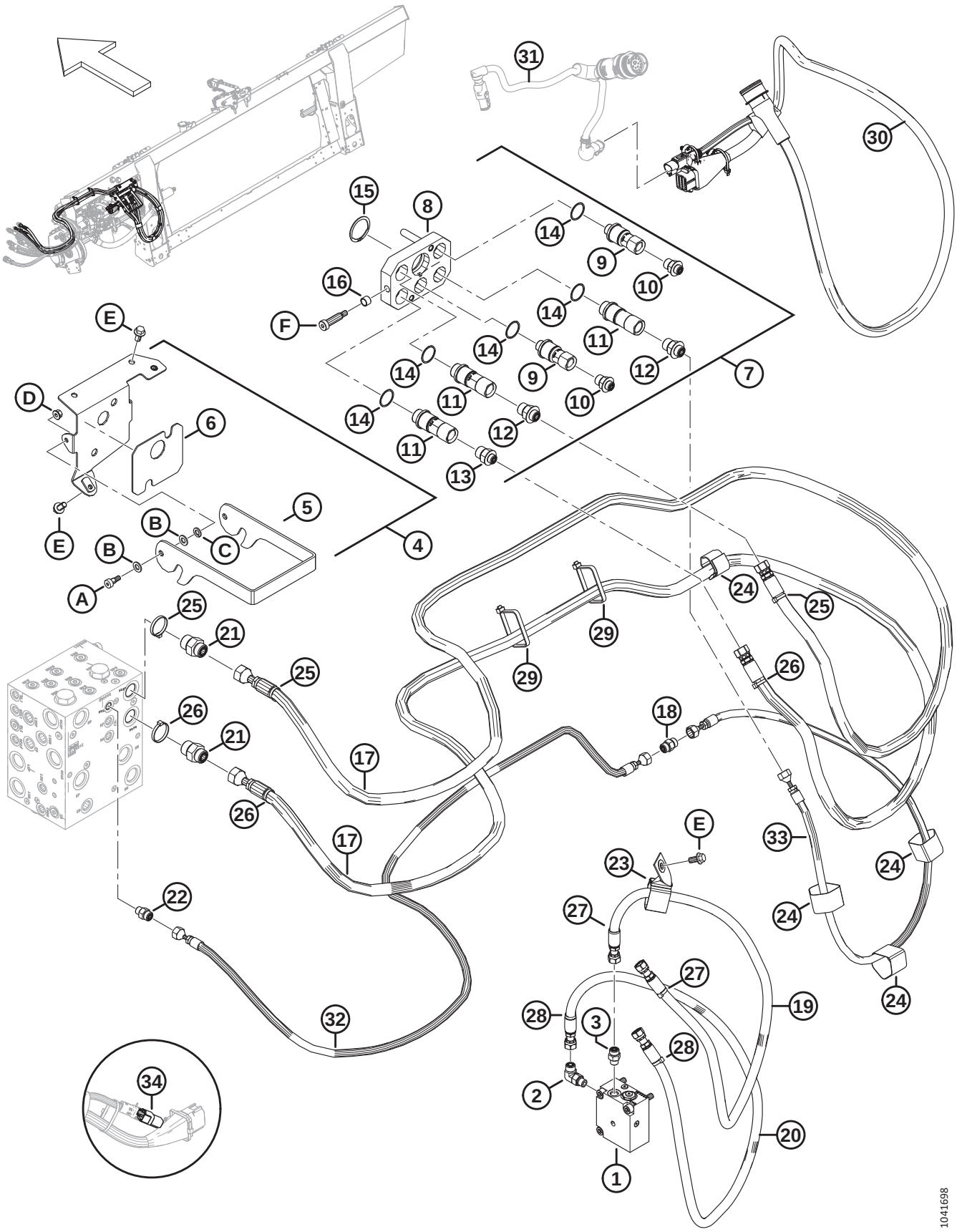

Ref	Part Number	Description	Qty	Serial Number
	B7057	KIT – JD S/T HYD ELEC COMPLETION [882]		
1	335342	VALVE – PO, CHECK	1	
	220959	SEAL KIT		
	279228	VALVE – CARTRIDGE, PO CHECK		
	320284	O-RING – 2.38 X 20.64		
	184711	WASHER – FLAT REG M10-200HV-AA1J		
2	136095	FITTING – ELBOW 90° HYD	1	
	135865	O-RING – Ø1.78 X Ø9.25		
	50219	O-RING – Ø1.98 X Ø11.89		
3	135778	FITTING – ADAPTER	1	
	50219	O-RING – Ø1.98 X Ø11.89		
	135865	O-RING – Ø1.78 X Ø9.25		
4	322216	ASSEMBLY – MULTI COUPLER MOUNT JD	1	
5	248960	LATCH – COUPLER BRACKET	1	
6	129149	PAD – RUBBER	1	
7	328002	COUPLING – MULTI JD 5-POSITION	1	
8	182182	PLATE ASSY – JD MULTICOUPLER	1	
9	191704	COUPLER – 3/8, JD MULTI COUPLER	2	
	129859	SEAL KIT – 3/8 IN MULTI-COUPLER		
10	191705	FITTING – ADAPTER HYD	2	
	44209	O-RING – Ø2.21 X Ø16.36		
	135865	O-RING – Ø1.78 X Ø9.25		
11	184460	COUPLER – 1/2 IN FF MULTI COUPLER	3	
	129860	SEAL KIT – 1/2 IN.60 SERIES MULTI-COUPLER		
12	184463	FITTING – ADAPTER HYD	2	
	44210	O-RING – Ø2.46 X Ø19.18		
	135866	O-RING – Ø1.78 X Ø12.42		
13	184462	FITTING – ADAPTER HYD	1	
	44210	O-RING – Ø2.46 X Ø19.18		
	135865	O-RING – Ø1.78 X Ø9.25		
14	184603	RING – RETAINING, JD COUPLER	5	
15	135267	RING – INVERTED EXT RETAINING	1	
16	182181	BUSHING – JD MULTICOUPLER	2	
17	314706	HOSE – HYD, REEL DRIVE JD	2	
18	136219	FITTING – UNION SAE -6 ORFS	1	
	135865	O-RING – Ø1.78 X Ø9.25		
19	314708	HOSE – HYD, REEL AFT JD	1	
20	314707	HOSE – HYD, REEL FORE JD	1	
21	135786	FITTING – ADAPTER	2	
	50219	O-RING – Ø1.98 X Ø11.89		
	135865	O-RING – Ø1.78 X Ø9.25		

882. Kits are available through Whole Goods only.

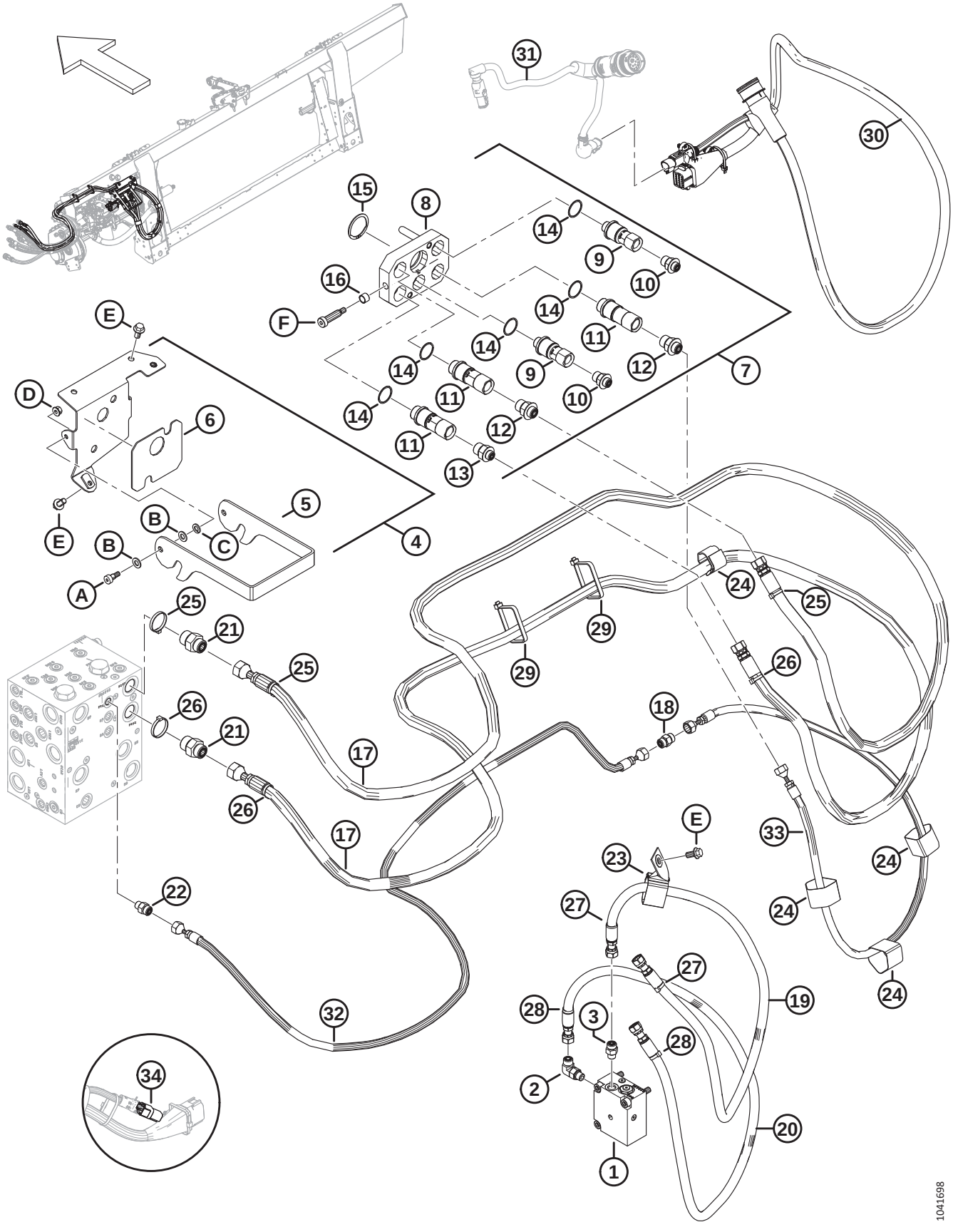
31
30
15
8
14
9
10
16
F
14
11
14
9
12
7
14
11
9
10
E
14
12
D
11
6
13
E
5
B
C
4
B
A
25
21
25
29
29
24
25
26
26
21
18
17
26
17
E
33
23
24
22
27
24
27
19
28
3
28
32
2
20
34
1
1041698

Ref	Part Number	Description	Qty	Serial Number
22	135778	FITTING – ADAPTER	1	
	50219	O-RING – Ø1.98 X Ø11.89		
	135865	O-RING – Ø1.78 X Ø9.25		
23	163598	CINCH STRAP – HANGING, 6 IN LG	1	
24	135444	CINCH STRAP – 6 IN LG	4	
25	49232	FASTENER – CABLE TIE, WHITE	3	
26	40701	FASTENER – CABLE TIE, YELLOW	3	
27	40702	FASTENER – CABLE TIE, RED	3	
28	49227	FASTENER – CABLE TIE, GREEN	3	
29	30753	FASTENER – CABLE TIE, BLACK	2	
30	322387	HARNESS – COMP., JD	1	
31	REF	HARNESS – CAB ADAPTER [883]	1	
32	337652	HOSE – HYD, REEL LIFT [884]	1	
33	337651	HOSE – HYD, REEL LIFT [885]	1	
34	REF	PLUG – FLOAT CONFIG. 2 SENSOR (LATERAL TILT) [886]	1	
A	135894	SCREW – HEX SOC HD SHLDR M10		
B	184711	WASHER – FLAT REG M10-200HV-AA1J		
C	30632	WASHER – LOCK SPRING M10		
D	135337	NUT – HEX FLG CTR LK M8 X 1.25-8-AA1J		
E	152655	BOLT – HEX FLG HD M10 X 1.5 X 20-8.8-AA1J		
F	184524	SCREW – HEX SOC HD SHLDR 1/2-3/8		

883. For the harness, refer to Section *197 Electrical – Base (Integrated Hydraulic System), page 495* or Section *198 Electrical – Base (Modular Hydraulic System), page 497*.
884. Connects to the hydraulic block.
885. Connects to the quick coupler.
886. The lateral tilt float plug (MD #328318) connects to the float module's main harness at P600. The float plug comes preinstalled for model year 2024 and later machines configured for John Deere S and T Series combines, but it is NOT included in the completion package (B7057). To order the float plug complete with installation instructions, refer to Section *197 Electrical – Base (Integrated Hydraulic System), page 495* or Section *198 Electrical – Base (Modular Hydraulic System), page 497*.

217 John Deere T Series – Float Module Completion

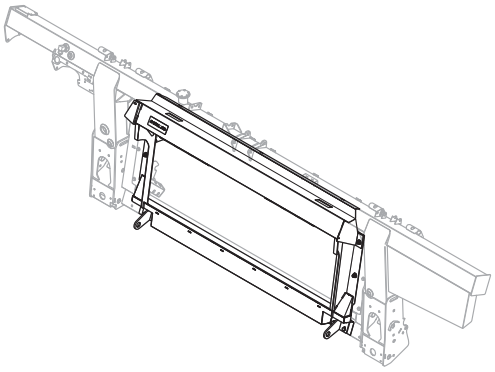

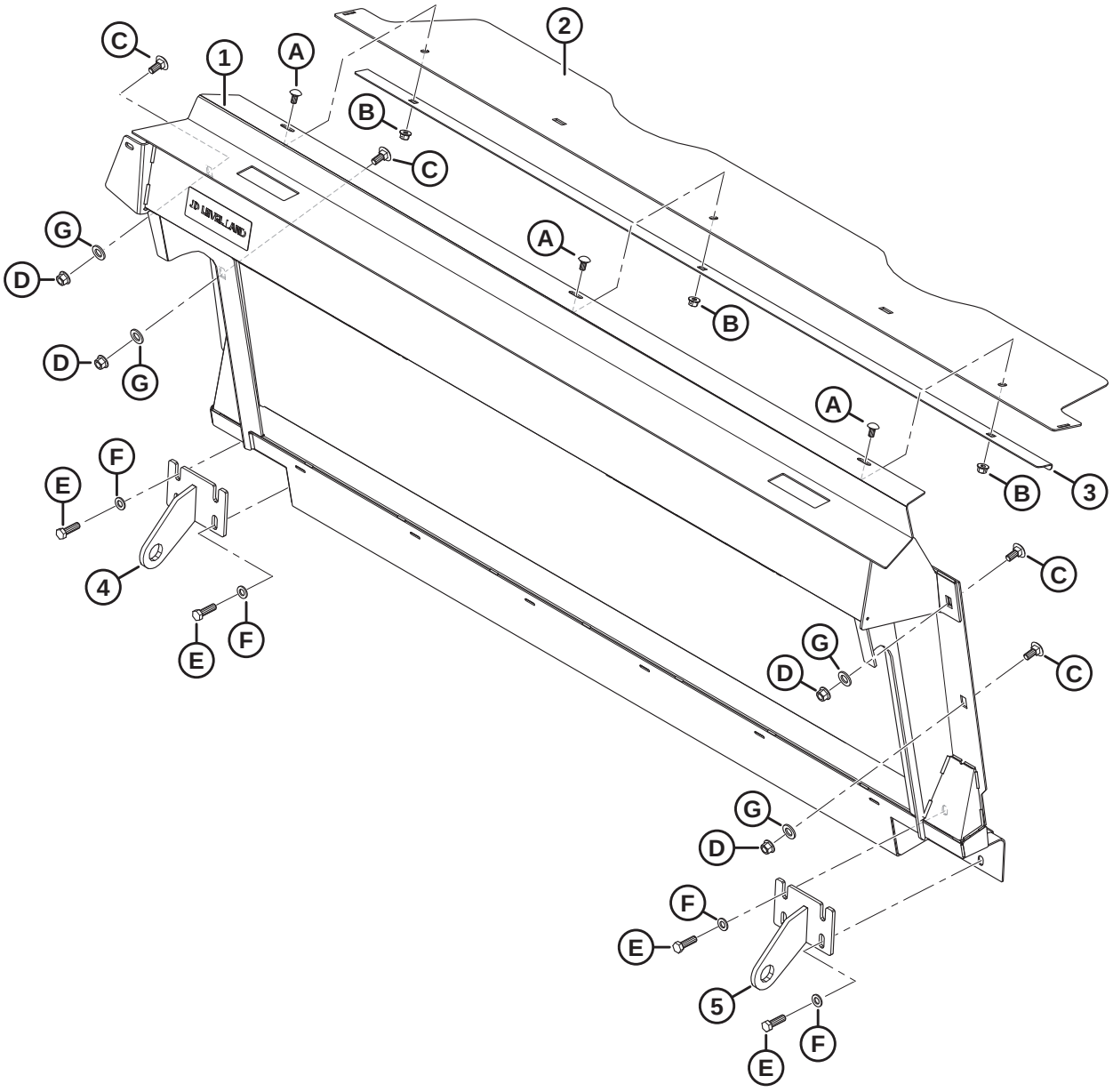

Ref	Part Number	Description	Qty	Serial Number
	B7341	KIT – JD-LEVEL LAND TRANSITION FRAME [887]		
1	357171	ASSEMBLY – JD LL TRANS FRAME W/DECAL	1	
2	357195	COVER – FEED AUGER TOP	1	
3	301629	RETAINER – DUST COVER	1	
4	151941	ANCHOR – WELDT LH	1	
5	151942	ANCHOR – WELDT RH	1	
A	184657	BOLT – RHSSN M10 X 1.5 X 20-8.8-AA1J		
B	135799	NUT – HEX FLG CTR LOC M10 X 1.5-10		
C	184667	BOLT – RHSN M12 X 1.75 X 30-8.8-ZINC		
D	136431	NUT – HEX FLG CTR LOC M12 X 1.75-10		
E	152730	BOLT – HEX HD TFL M12 X 1.75 X 35-10.9-AA1J		
F	184714	WASHER – FLAT REG M12-300HV		
G	184717	WASHER – FLAT REG M16-200HV-AA1J		

887. Kits are available through Whole Goods only.

218 John Deere X9 Series – Float Module Completion

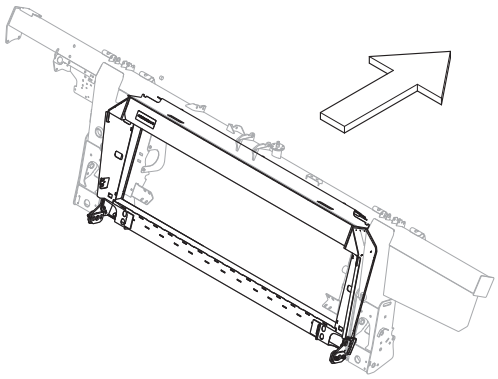

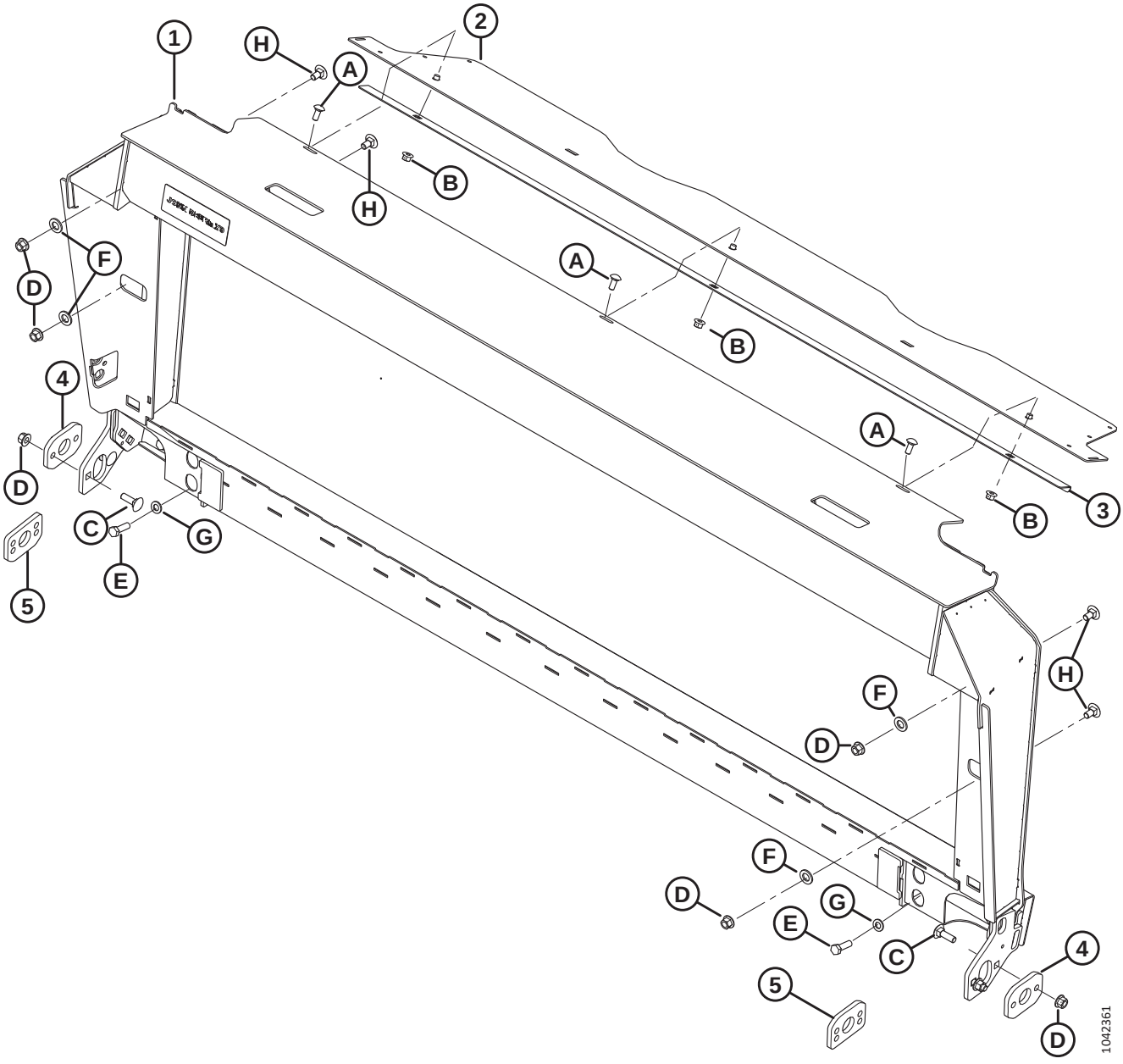

Ref	Part Number	Description	Qty	Serial Number
	B7533	**KIT – JD-X9 TRANSITION FRAME** [888]		
1	**368660**	**TRANSITION FRAME W/ DECAL – JD X9**	**1**	
2	357195	COVER – FEED AUGER TOP	1	
3	301629	RETAINER – DUST COVER	1	
4	**368656**	**PLATE – ADJUSTMENT** [889]	**2**	
5	**368826**	**PLATE – ADJUSTMENT** [890]	**2**	
A	**136506**	**BOLT – RHSSN M10 X 1.5 X 25-8.8-AA1J**		
B	135799	NUT – HEX FLG CTR LOC M10 X 1.5-10		
C	**135900**	**BOLT – RHSN TFL M12 X 1.75 X 40-8.8-ZINC**		
D	136431	NUT – HEX FLG CTR LOC M12 X 1.75-10		
E	**152730**	**BOLT – HEX HD TFL M12 X 1.75 X 35-10.9-AA1J**		
F	184717	WASHER – FLAT REG M16-200HV-AA1J		
G	184714	WASHER – FLAT REG M12-300HV		
H	184667	BOLT – RHSN M12 X 1.75 X 30-8.8-ZINC		

888. Kits are available through Whole Goods only.
889. One-position adjustment plates.
890. Two-position adjustment plates.

219 John Deere X9 Series – Hydraulic Completion

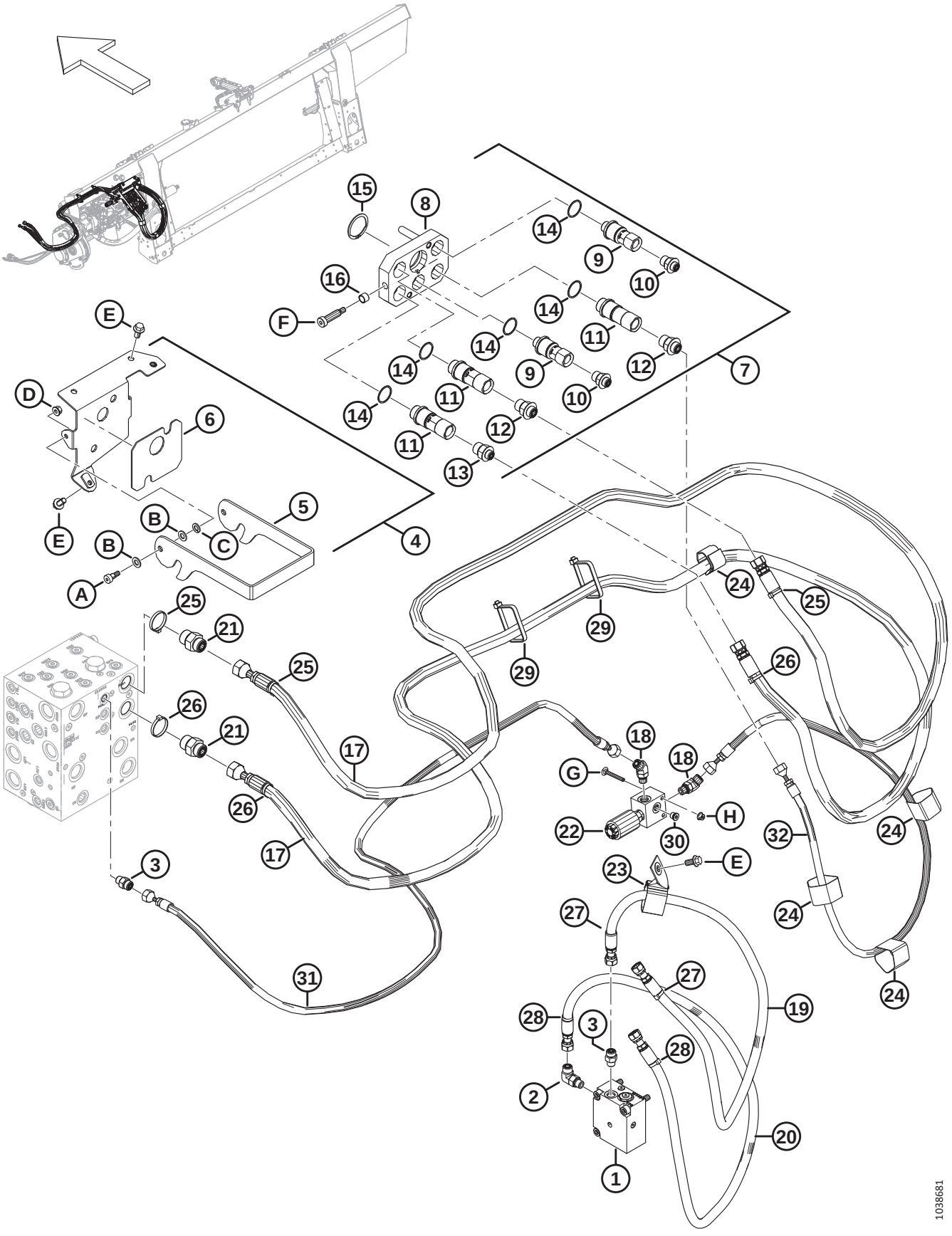

Ref	Part Number	Description	Qty	Serial Number
	B7323	KIT – JD X9 HYD ELEC COMPLETION [891]		
1	335342	VALVE – PO, CHECK	1	
	220959	SEAL KIT		
	279228	VALVE – CARTRIDGE, PO CHECK		
	320284	O-RING – 2.38 X 20.64		
	320392	SCREW – HEX SOC HD M10 X 1.5 X 55-8.8-ZINC		
	184711	WASHER – FLAT REG M10-200HV-AA1J		
2	136095	FITTING – ELBOW 90° HYD	1	
	135865	O-RING – Ø1.78 X Ø9.25		
	50219	O-RING – Ø1.98 X Ø11.89		
3	135778	FITTING – ADAPTER	2	
	50219	O-RING – Ø1.98 X Ø11.89		
	135865	O-RING – Ø1.78 X Ø9.25		
4	322216	ASSEMBLY – MULTI COUPLER MOUNT JD	1	
5	248960	LATCH – COUPLER BRACKET	1	
6	129149	PAD – RUBBER	1	
7	328002	COUPLING – MULTI JD 5-POSITION	1	
8	182182	PLATE ASSY – JD MULTICOUPLER	1	
9	191704	COUPLER – 3/8, JD MULTI COUPLER	2	
	129859	SEAL KIT – 3/8 IN MULTI-COUPLER		
10	191705	FITTING – ADAPTER HYD	2	
	44209	O-RING – Ø2.21 X Ø16.36		
	135865	O-RING – Ø1.78 X Ø9.25		
11	184460	COUPLER – 1/2 IN FF MULTI COUPLER	3	
	129860	SEAL KIT – 1/2 IN.60 SERIES MULTI-COUPLER		
12	184463	FITTING – ADAPTER HYD	2	
	44210	O-RING – Ø2.46 X Ø19.18		
	135866	O-RING – Ø1.78 X Ø12.42		
13	184462	FITTING – ADAPTER HYD	1	
	44210	O-RING – Ø2.46 X Ø19.18		
	135865	O-RING – Ø1.78 X Ø9.25		
14	184603	RING – RETAINING, JD COUPLER	5	
15	135267	RING – INVERTED EXT RETAINING	1	
16	182181	BUSHING – JD MULTICOUPLER	2	
17	314706	HOSE – HYD, REEL DRIVE JD	2	
18	136144	FITTING – ELBOW 45° HYD	2	
	50219	O-RING – Ø1.98 X Ø11.89		
	135865	O-RING – Ø1.78 X Ø9.25		
19	314708	HOSE – HYD, REEL AFT JD	1	
20	314707	HOSE – HYD, REEL FORE JD	1	

891. Includes all parts listed in this section and Section *220 John Deere X9 Series – Electrical Completion, page 561*. Kits are available through Whole Goods only.

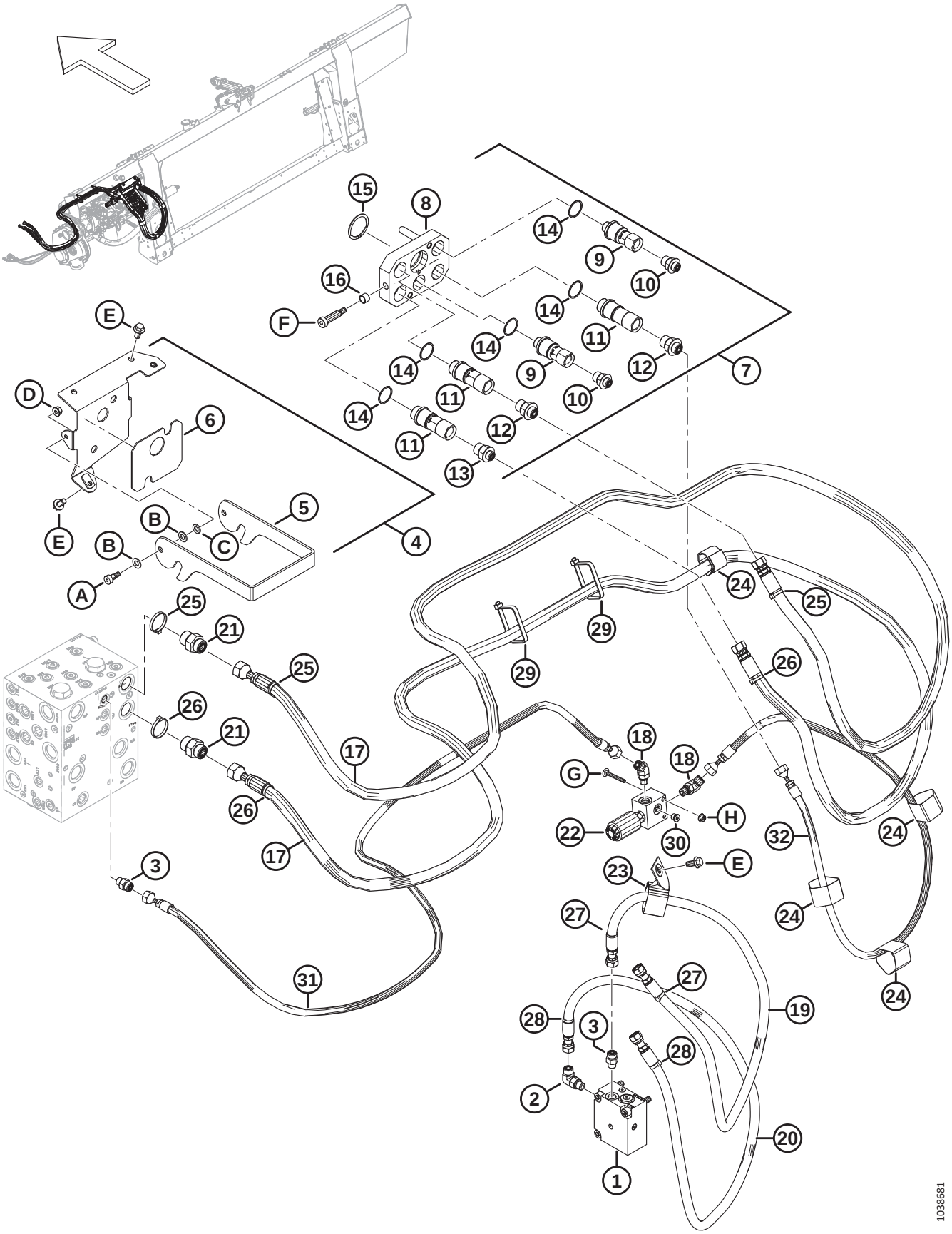
1038681

Ref	Part Number	Description	Qty	Serial Number
21	135786	FITTING – ADAPTER	2	
	50219	O-RING – Ø1.98 X Ø11.89		
	135865	O-RING – Ø1.78 X Ø9.25		
22	337551	MANIFOLD – BLOCKING VALVE	1	
23	163598	CINCH STRAP – HANGING, 6 IN LG	1	
24	135444	CINCH STRAP – 6 IN LG	4	
25	49232	FASTENER – CABLE TIE, WHITE	3	
26	40701	FASTENER – CABLE TIE, YELLOW	3	
27	40702	FASTENER – CABLE TIE, RED	3	
28	49227	FASTENER – CABLE TIE, GREEN	3	
29	30753	FASTENER – CABLE TIE, BLACK	2	
30	102711	FITTING – PLUG HYD 4 ORB HEX SOC	1	
31	337652	HOSE – HYD, REEL LIFT [892]	1	
32	337651	HOSE – HYD, REEL LIFT [893]	1	
A	135894	SCREW – HEX SOC HD SHLDR M10		
B	184711	WASHER – FLAT REG M10-200HV-AA1J		
C	30632	WASHER – LOCK SPRING M10		
D	135337	NUT – HEX FLG CTR LK M8 X 1.25-8-AA1J		
E	152655	BOLT – HEX FLG HD M10 X 1.5 X 20-8.8-AA1J		
F	184524	SCREW – HEX SOC HD SHLDR 1/2-3/8		
G	184644	BOLT – RHSN M6 X 1 X 50-8.8-ZINC		
H	152668	NUT – HEX FLG CTR LOC M6 X 1-8		

892. Connects to the hydraulic block.
893. Connects to the quick coupler.

220 John Deere X9 Series – Electrical Completion

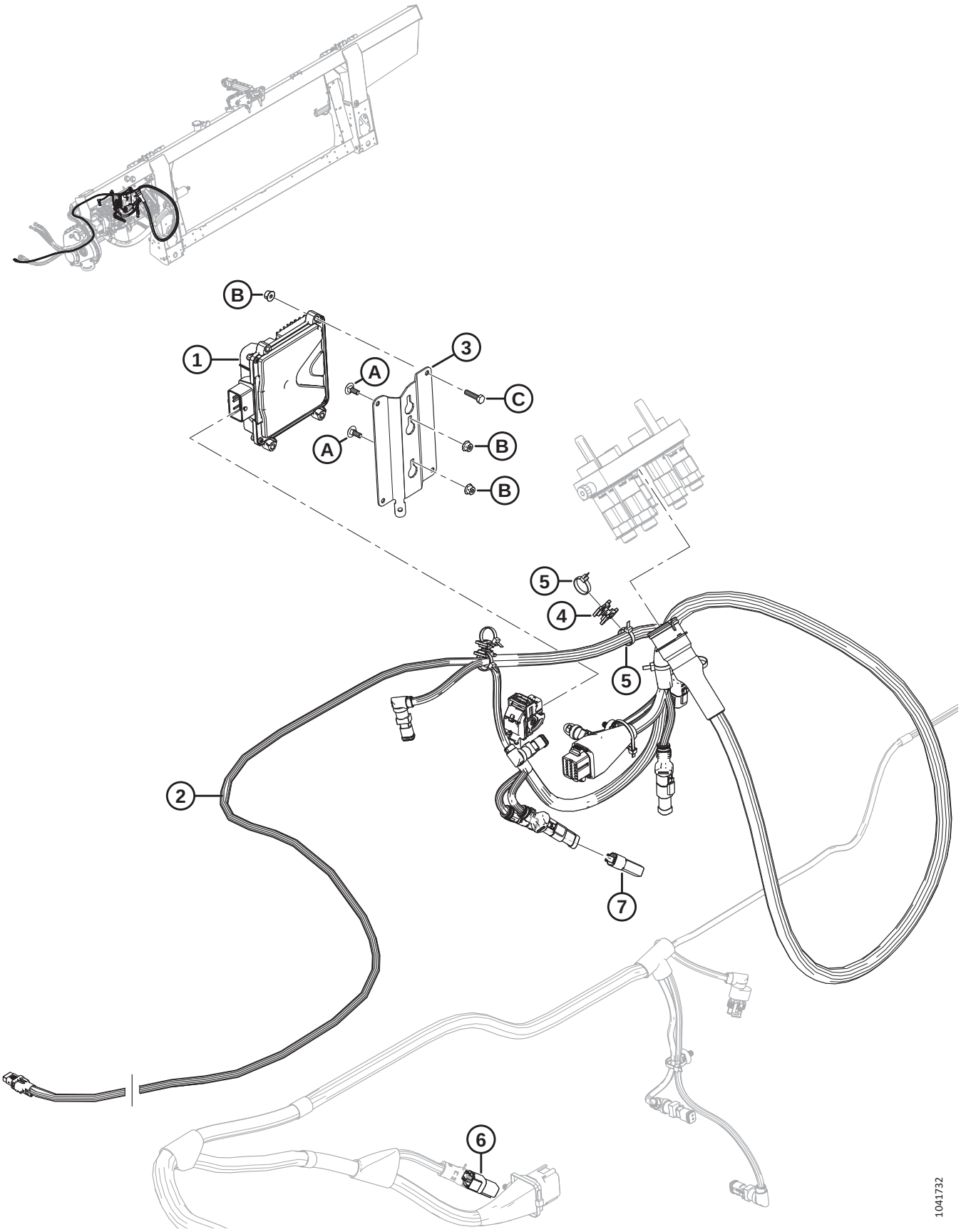

Ref	Part Number	Description	Qty	Serial Number
	B7323	KIT – JD X9 HYD ELEC COMPLETION [894]		
1	500518	MODULE – ASSY-STW ESX-3CS WITH X9SW	1	
2	335971	HARNESS – COMPLETION, JD X9	1	
	134043	RECEPT – DEUTSCH, DT04-3P-P006 (CAN TERMINATOR) [895]		
3	357989	BRACKET – MODULE	1	
4	134442	SPACER – DUAL SWIVEL SADDLE	3	
5	21763	FASTENER – CABLE TIE, BLACK	6	
6	323698	PLUG – TILT, PASS THRU	1	
7	357046	PLUG – ID, 25	1	
	357047	PLUG – ID, 30	1	
	357050	PLUG – ID, 35	1	
	357051	PLUG – ID, 40	1	
	357052	PLUG – ID, 41	1	
	357053	PLUG – ID, 45	1	
	357054	PLUG – ID, 50	1	
A	136748	BOLT – RHSN M6 X 1 X 16-8.8-ZINC		
B	152668	NUT – HEX FLG CTR LOC M6 X 1-8		
C	135301	BOLT – HEX HD M6 X 1 X 25-8.8-AA1J		

894. Includes all parts listed in this section and Section *219 John Deere X9 Series – Hydraulic Completion, page 557*. Kits are available through Whole Goods only.
895. CAN terminator.

221 New Holland CR/CX – Float Module Completion

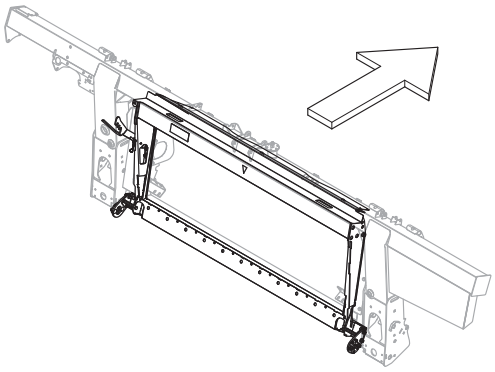

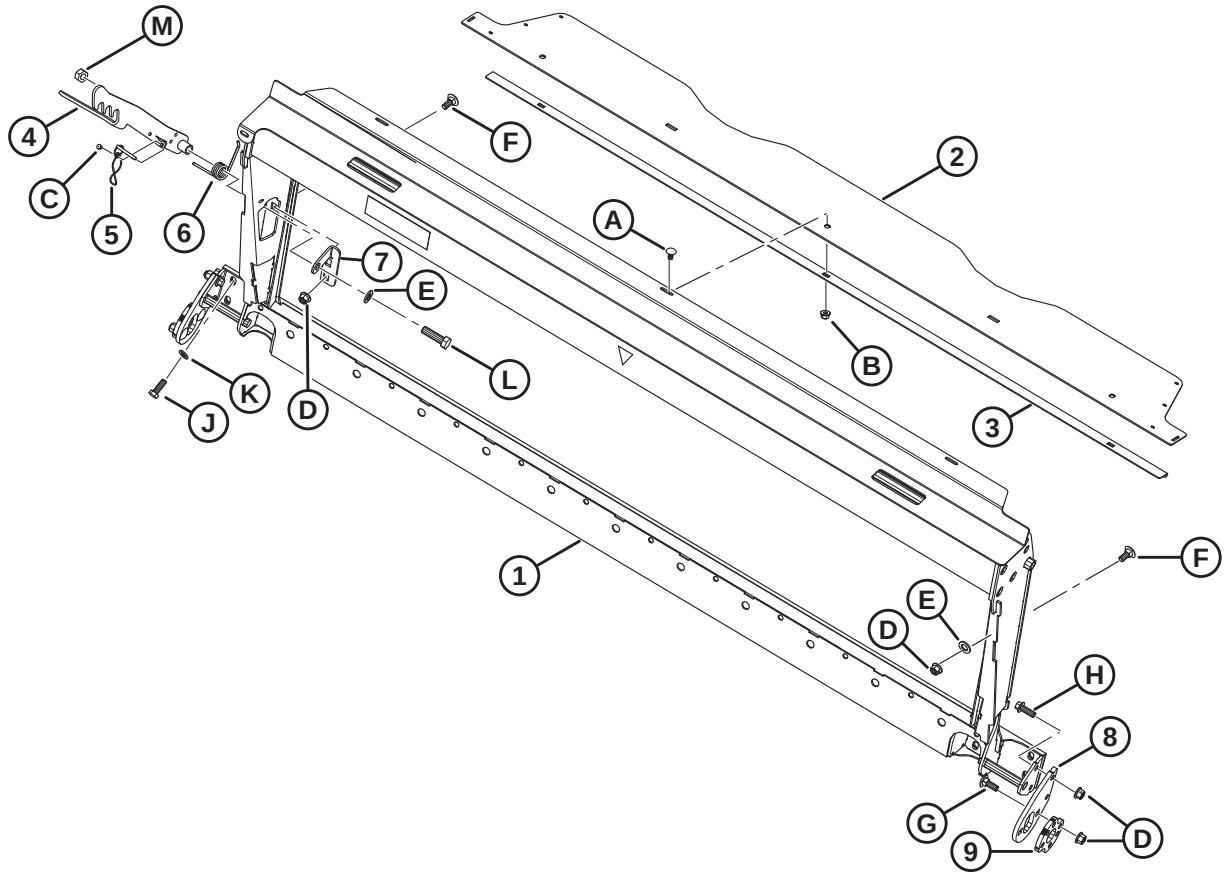

1044022

Ref	Part Number	Description	Qty	Serial Number
	B7476	**KIT – CNH TRANSITION FRAME** [896]		
1	**357567**	**ASSY – CNH TRANSITION W/ DECAL**	**1**	
2	357195	COVER – FEED AUGER TOP	1	
3	301629	RETAINER – DUST COVER	1	
4	347141	LATCH – WELDT	1	
5	237363	PIN – DETENT WITH 8 IN. LANYARD	1	
6	156948	SPRING – TORSION	1	
7	**357606**	**SUPPORT – BOLT MOUNT**	**1**	
8	**284976**	**SUPPORT – ANCHOR MOUNT**	**2**	
9	**284971**	**PLATE – ADJUSTMENT**	**2**	
A	184657	BOLT – RHSSN M10 X 1.5 X 20-8.8-AA1J		
B	135799	NUT – HEX FLG CTR LOC M10 X 1.5-10		
C	**113799**	**RIVET – POP**		
D	136431	NUT – HEX FLG CTR LOC M12 X 1.75-10		
E	**184717**	**WASHER – FLAT REG M16-200HV-AA1J**		
F	**184667**	**BOLT – RHSN M12 X 1.75 X 30-8.8-ZINC**		
G	**136291**	**BOLT – RHSN TFL M12 X 1.75 X 35-8.8-ZINC**		
H	**152731**	**BOLT – HEX FLG HD TFL M12 X 1.75 X 35-10.9-ZINC**		
J	**152730**	**BOLT – HEX HD TFL M12 X 1.75 X 35-10.9-AA1J**		
K	184714	WASHER – FLAT REG M12-300HV		
L	**136717**	**BOLT – HEX HD M16 X 2 X 55-10.9**		
M	**320208**	**NUT – HEX CTR LOCK M16 X 2-12-ZINC**		

896. Kits are available through Whole Goods only.

222 New Holland CR/CX – Hydraulic/Electrical Completion

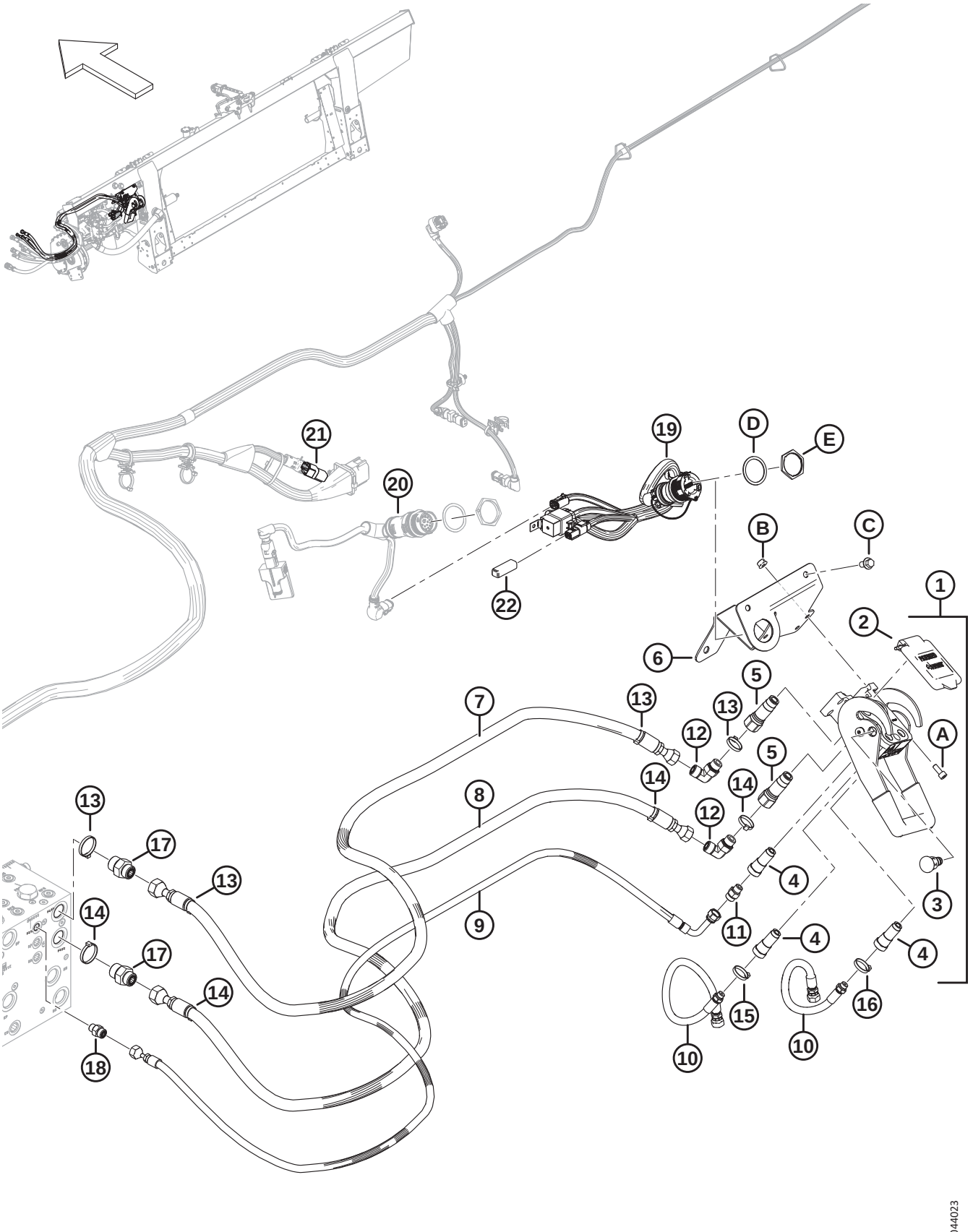

Ref	Part Number	Description	Qty	Serial Number
	B7507	KIT – CNH HYD ELEC COMPLETION [897]		
1	153151	COUPLING – MULTI [898]	1	
2	129800	KIT – COVER CNH MULTI-COUPLER	1	
3	129801	KIT – LATCH BUTTON	1	
4	129976	COUPLING 1/4 IN.	3	
5	129977	COUPLING 3/8 IN.	2	
6	328874	SUPPORT WELDT – CNH MULTI COUPLER	1	
7	314586	HOSE – HYD, REEL DRIVE PRESSURE CNH	1	
8	314587	HOSE – HYD, REEL DRIVE RETURN CNH	1	
9	314588	HOSE – HYD, REEL LIFT, CNH	1	
10	314585	HOSE – HYD, REEL F-A, CNH	2	
11	252694	FITTING – ADAPTER .052 ORIFICE	1	
12	136220	FITTING – ELBOW 90° HYD	2	
	44209	O-RING – Ø2.21 X Ø16.36		
	135866	O-RING – Ø1.78 X Ø12.42		
13	49232	FASTENER – CABLE TIE, WHITE	4	
14	40701	FASTENER – CABLE TIE, YELLOW	4	
15	40702	FASTENER – CABLE TIE, RED	2	
16	49227	FASTENER – CABLE TIE, GREEN	2	
17	135786	FITTING – ADAPTER	2	
	50219	O-RING – Ø1.98 X Ø11.89		
	135865	O-RING – Ø1.78 X Ø9.25		
18	135778	FITTING – ADAPTER	1	
	50219	O-RING – Ø1.98 X Ø11.89		
	135865	O-RING – Ø1.78 X Ø9.25		
19	**284946**	**KIT – CNH ELEC COMP, INTEGRATED** [899]	**1**	
20	REF	HARNESS – CAB ADAPTER [900]	1	
	REF	MODULE – VALVE DRIVER [900]	1	
	REF	WASHER – LOCK, HDP 20, SIZE 24 [900]	1	
	REF	NUT – PANEL, HDP 20, SIZE 24 [900]	1	
21	REF	PLUG – TILT, PASS THRU [901]	1	

897. Kits are available through Whole Goods only.
898. The multicoupler includes CNH multi-coupler cover kit (MD #MD #129800), latch button kit (MD #129801), three 1/4 inch couplings (MD #129976), and two 3/8 inch coupling (MD #129977).
899. The kit includes integration completion harness (NSS), transistor plug (MD #349362), and hardware (MD #134010, MD #134011).
900. For the harness, valve driver module, and hardware, refer to Section *197 Electrical – Base (Integrated Hydraulic System), page 495* or Section *198 Electrical – Base (Modular Hydraulic System), page 497*; required for model year 2018 and prior machines only.
901. The pass-thru tilt plug (MD #323698) connects to the float module's main harness at P600. The float plug comes preinstalled for model year 2024 and later machines configured for New Holland CR Wide combines, but it is NOT included in the completion package (B7507). To order the pass-thru tilt plug complete with installation instructions, refer to Section *197 Electrical – Base (Integrated Hydraulic System), page 495* or Section *198 Electrical – Base (Modular Hydraulic System), page 497*.

1
2
3
4
5
6
7
8
9
10
11
12
13
14
15
16
17
18
19
20
21
22
A
B
C
D
E
1044023

Ref	Part Number	Description	Qty	Serial Number
22	**349362**	**PLUG – SW PWR TRANSISTOR**	**1**	
A	167307	SCREW – HEX SOC HD M8 X 1.25 X 20-8.8-AA1J		
B	135337	NUT – HEX FLG CTR LK M8 X 1.25-8-AA1J		
C	136151	BOLT – HEX FLG HD TFL M10 X 1.5 X 16-8.8-AA1J		
D	134011	WASHER – LOCK SPRING, DEUTSCH HD, SIZE 24		
E	134010	NUT – PANEL, HD 30, SIZE 24		

223 New Holland CR/CX – Auger Completion

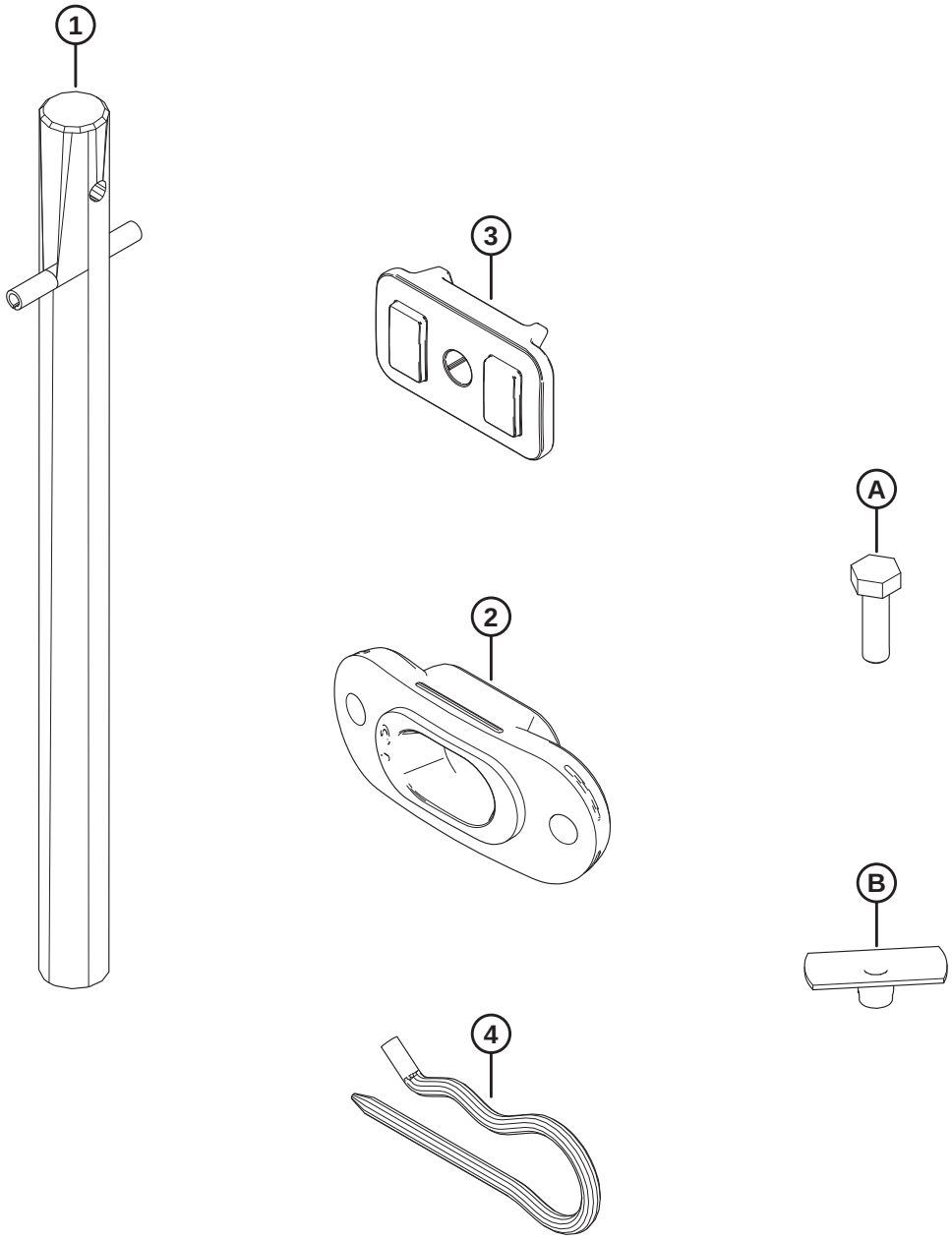

1032789

Ref	Part Number	Description	Qty	Serial Number
1	337152	KIT – FINGER	8	
	7642	PIN – SPRING 3/16 DIA X 1.5 LG	8	
2	337143	GUIDE	8	
3	213084	PLUG – FLIGHTING SLOT	8	
4	123180	PIN – HAIR	8	
A	252703	BOLT – HEX HD TFL M6 X 1 X 20 X SPCL-12.9-AF0C		
B	197263	NUT – TEE M6 X 1		

224 New Holland CR/CX – Flighting Completion

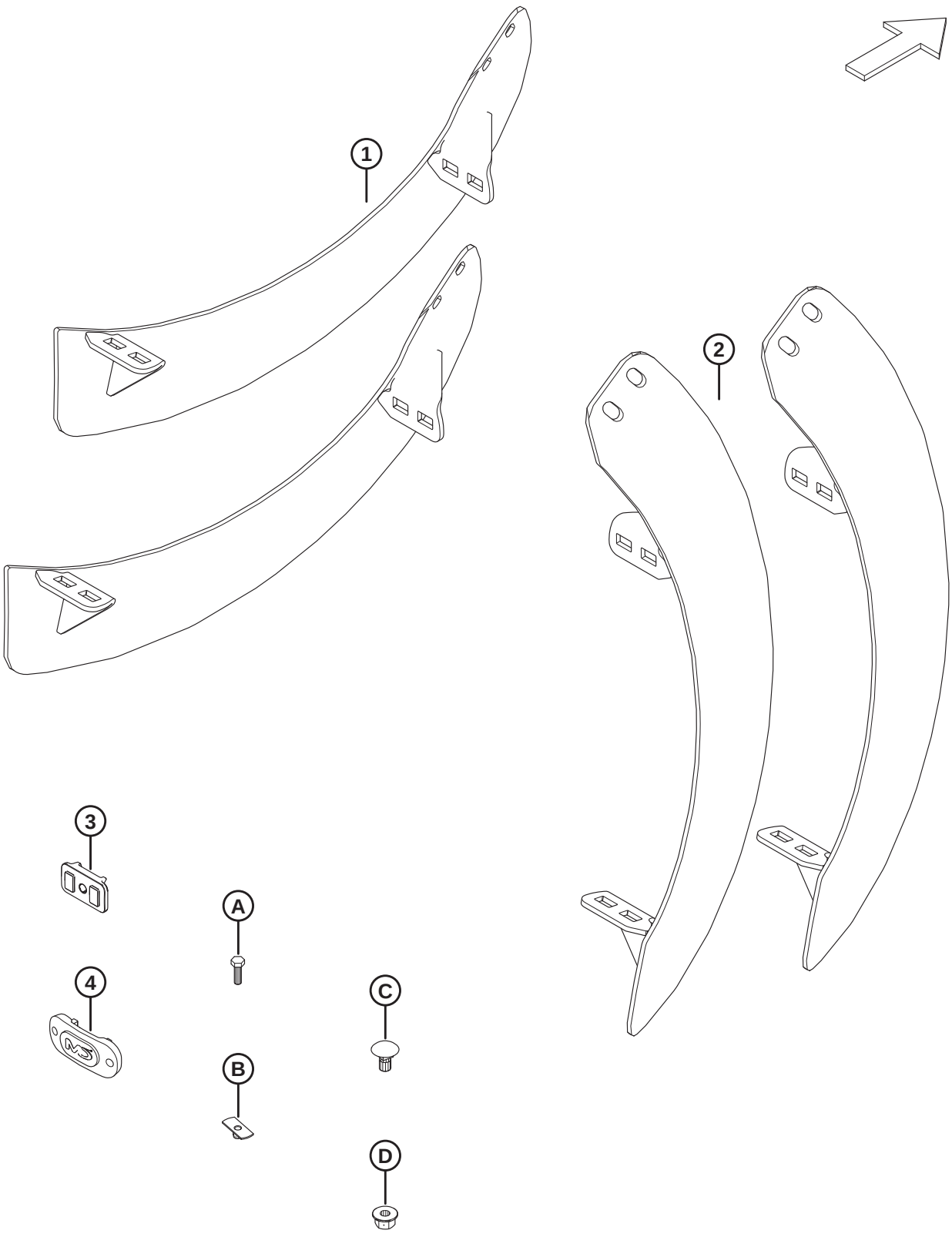

Ref	Part Number	Description	Qty	Serial Number
1	287889	FLIGHTING – LH HIWEAR	2	
2	287890	FLIGHTING – RH HIWEAR	2	
3	213084	PLUG – FLIGHTING SLOT	2	
4	187137	PLUG	4	
A	252703	BOLT – HEX HD TFL M6 X 1 X 20 X SPCL-12.9-AF0C		
B	197263	NUT – TEE M6 X 1		
C	136178	BOLT – RHSN M10 X 1.5 X 20-8.8-AA1J		
D	135799	NUT – HEX FLG CTR LOC M10 X 1.5-10		

225 New Holland CR/CX – Deflector Completion

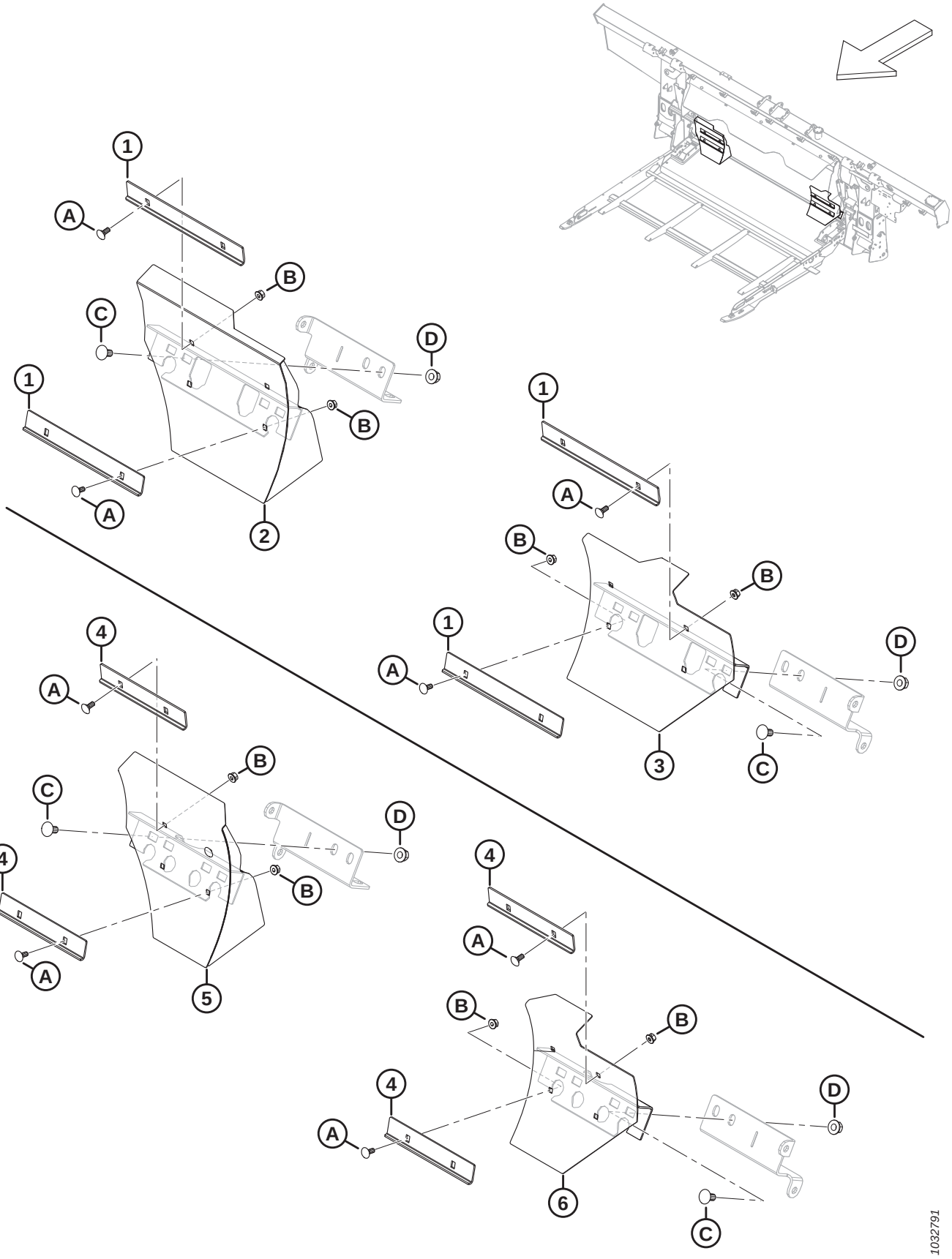

Ref	Part Number	Description	Qty	Serial Number
	B7347	KIT – DEFLECTORS, NARROW FEED AUGER [902]		
	B7348	KIT – DEFLECTORS, MEDIUM FEED AUGER [903]		
1	328085	ANGLE – LONG STRIPPER [904]	4	
2	337779	DEFLECTOR – LONG RH WELDT [904]	1	
3	337780	DEFLECTOR – LONG LH WELDT [904]	1	
4	314680	ANGLE – SHORT STRIPPER [905]	4	
5	337777	DEFLECTOR – SHORT RH WELDT [905]	1	
6	337778	DEFLECTOR – SHORT LH WELDT [905]	1	
A	197171	BOLT – RHSN M8 X 1.25 X 20-8.8-ZINC		
B	135337	NUT – HEX FLG CTR LK M8 X 1.25-8-AA1J		
C	152439	BOLT – RHSSN M12 X 1.75 X 25-8.8-AA1J		
D	136431	NUT – HEX FLG CTR LOC M12 X 1.75-10		

902. For feeder opening widths of approximately 1115 mm (44 in.). Kits are available through Whole Goods only.
903. For feeder opening widths of approximately 1317 mm (52 in.). Kits are available through Whole Goods only.
904. Included in B7347.
905. Included in B7348.

226 New Holland 10 Volt Auto Header Height Control Adapter Kit

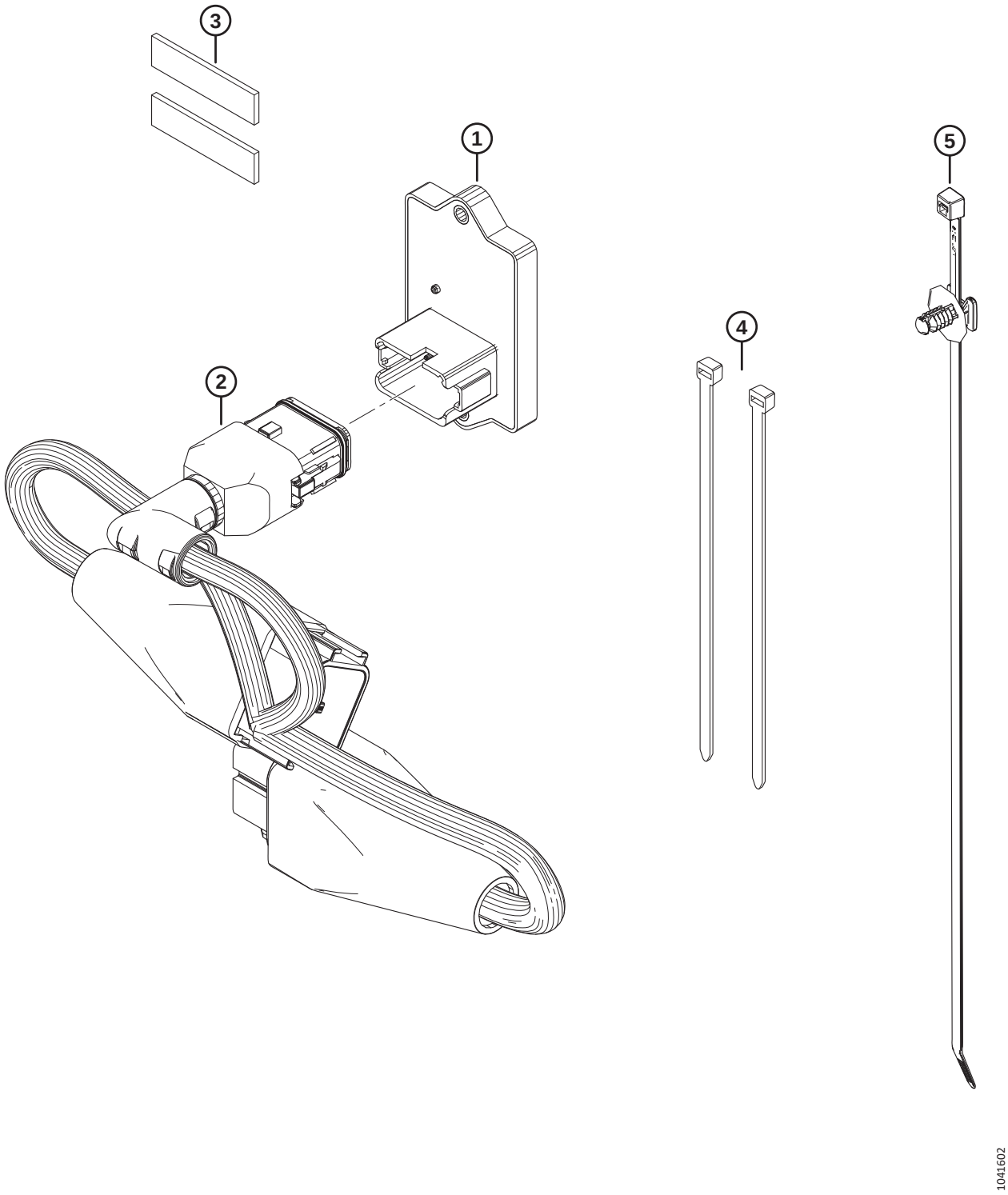

NEW HOLLAND 10 VOLT AUTO HEADER HEIGHT CONTROL ADAPTER KIT

Ref	Part Number	Description	Qty	Serial Number
	B7241	KIT – NH 10V ADAPTER [906]		
1	500448	MODULE – NH 10V	1	
2	335160	HARNESS – NH 10V ADAPTER	1	
3	NSS	TAPE – FOAM, VHB, 1/2 IN. WIDE, 50 MM	2	
4	21763	FASTENER – CABLE TIE, BLACK	2	
5	136655	FASTENER – FIR TREE MT W/ TIE	1	

906. Kits are available through Whole Goods only.

227 Rostselmash – Float Module Completion

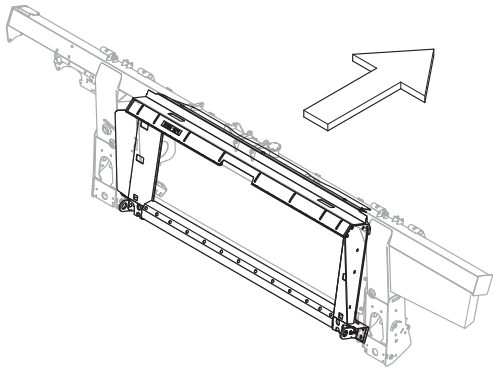

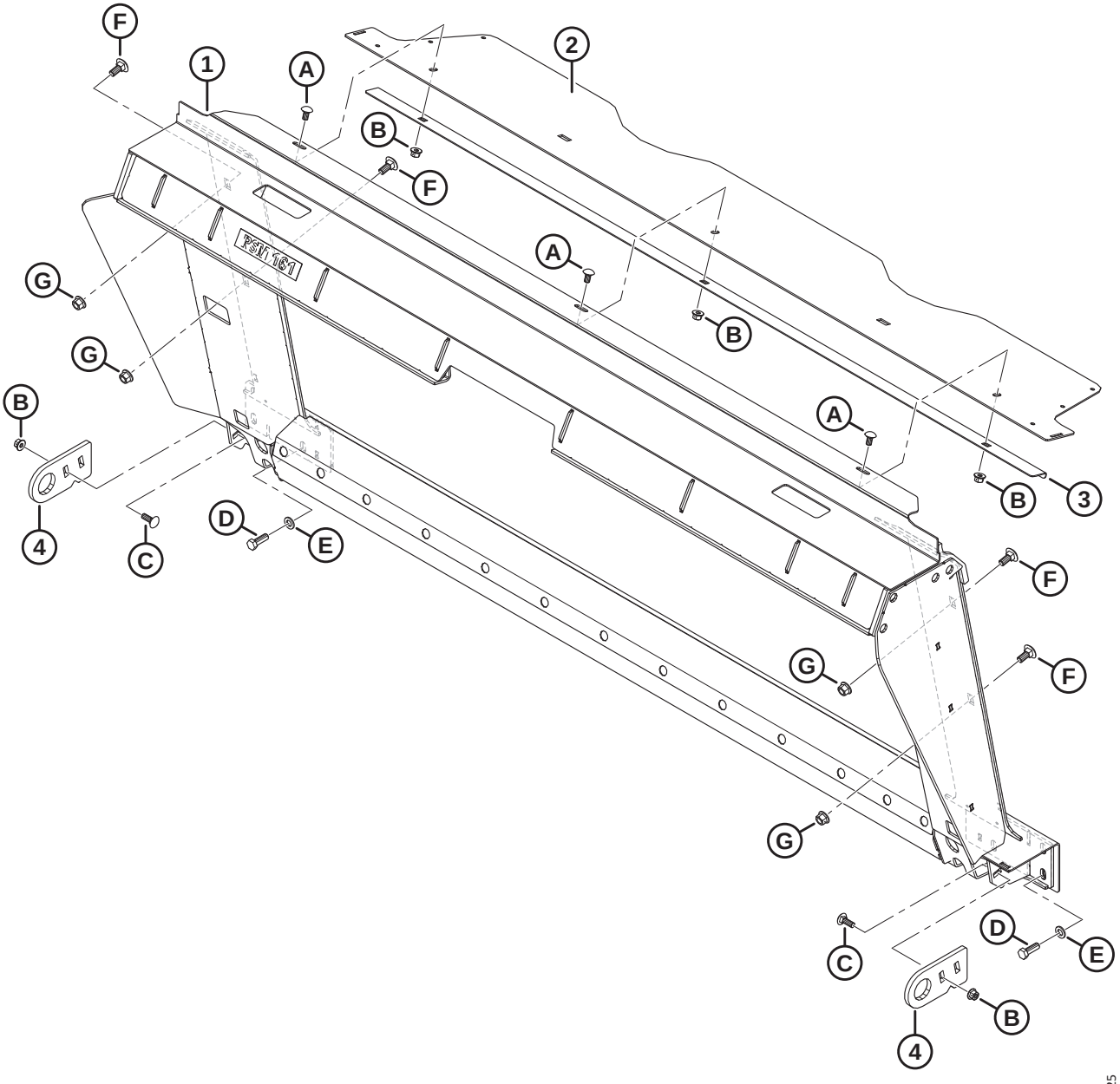

Ref	Part Number	Description	Qty	Serial Number
	B7311	KIT – RSM 161 TRANSITION FRAME [907]		
1	347498	FRAME – RSM161 W/DECAL	1	
2	357195	COVER – FEED AUGER TOP	1	
3	301629	RETAINER – DUST COVER	1	
4	347532	ANCHOR – RSM	2	
A	184657	BOLT – RHSSN M10 X 1.5 X 20-8.8-AA1J		
B	135799	NUT – HEX FLG CTR LOC M10 X 1.5-10		
C	184662	BOLT – RHSN TFL M10 X 1.5 X 30-8.8-AA1J		
D	152730	BOLT – HEX HD TFL M12 X 1.75 X 35-10.9-AA1J		
E	184714	WASHER – FLAT REG M12-300HV		
F	184667	BOLT – RHSN M12 X 1.75 X 30-8.8-ZINC		
G	136431	NUT – HEX FLG CTR LOC M12 X 1.75-10		

907. Kits are available through Whole Goods only.

228 Rostselmash – Hydraulic/Electrical Completion

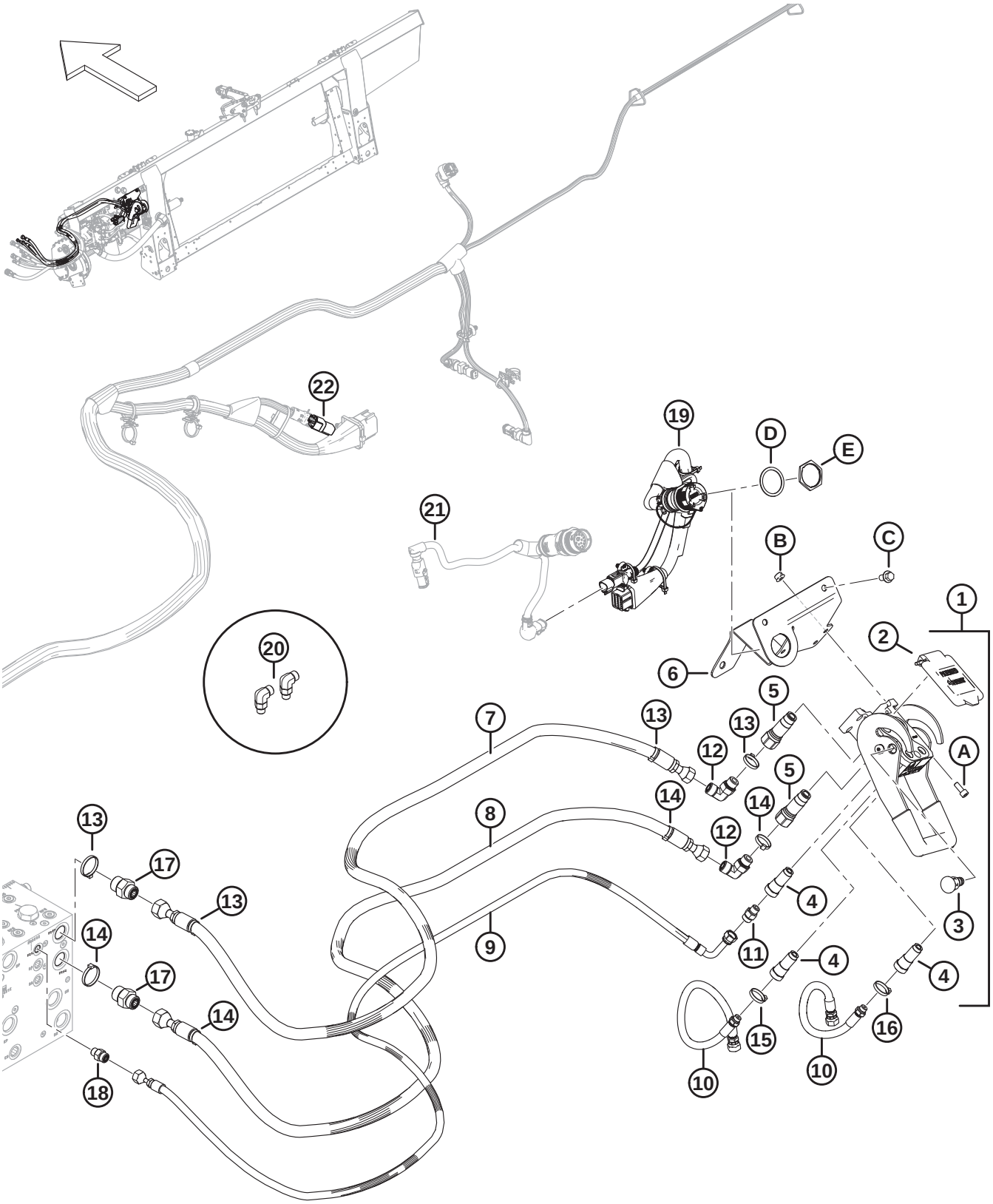

Ref	Part Number	Description	Qty	Serial Number
	B7407	KIT – RSM HYD ELEC COMPLETION [908]		
1	153151	COUPLING – MULTI [909]	1	
2	129800	KIT – COVER CNH MULTI-COUPLER	1	
3	129801	KIT – LATCH BUTTON	1	
4	129976	COUPLING 1/4 IN.	3	
5	129977	COUPLING 3/8 IN.	2	
6	328874	SUPPORT WELDT – CNH MULTI COUPLER	1	
7	314586	HOSE – HYD, REEL DRIVE PRESSURE CNH	1	
8	314587	HOSE – HYD, REEL DRIVE RETURN CNH	1	
9	314588	HOSE – HYD, REEL LIFT, CNH	1	
10	314585	HOSE – HYD, REEL F-A, CNH	2	
11	252694	FITTING – ADAPTER .052 ORIFICE	1	
12	136220	FITTING – ELBOW 90° HYD	2	
	44209	O-RING – Ø2.21 X Ø16.36		
	135866	O-RING – Ø1.78 X Ø12.42		
13	49232	FASTENER – CABLE TIE, WHITE	4	
14	40701	FASTENER – CABLE TIE, YELLOW	4	
15	40702	FASTENER – CABLE TIE, RED	2	
16	49227	FASTENER – CABLE TIE, GREEN	2	
17	135786	FITTING – ADAPTER	2	
	50219	O-RING – Ø1.98 X Ø11.89		
	135865	O-RING – Ø1.78 X Ø9.25		
18	135778	FITTING – ADAPTER	1	
	50219	O-RING – Ø1.98 X Ø11.89		
	135865	O-RING – Ø1.78 X Ø9.25		
19	347630	HARNESS – COMP., ROSTSELMASH	1	
20	136095	FITTING – ELBOW 90° HYD	2	
	135865	O-RING – 1.78 X 9.25		
	50219	O-RING – 1.98 X 11.89		
21	REF	HARNESS – CAB ADAPTER [910]	1	
	REF	MODULE – VALVE DRIVER [910]	1	
22	REF	PLUG – FLOAT CONFIG. 2 SENSOR (LATERAL TILT) [911]	1	
A	167307	SCREW – HEX SOC HD M8 X 1.25 X 20-8.8-AA1J		

908. Kits are available through Whole Goods only.
909. The multicoupler includes multicoupler cover kit (MD #129800), latch button kit (MD #129801), three 1/4 inch couplings (MD #129976), and two 3/8 inch coupling (MD #129977).
910. For the harness, valve driver module, and hardware, refer to Section *197 Electrical – Base (Integrated Hydraulic System), page 495* or Section *198 Electrical – Base (Modular Hydraulic System), page 497*.
911. The lateral tilt float plug (MD #328318) connects to the float module's main harness at P600. The float plug comes preinstalled for model year 2024 and later incomplete-configured machines and is required when converting from machines configured for Case or John Deere X9 Series combines, but it is NOT included in the completion package (B7407). To order the float plug complete with installation instructions, refer to Section *197 Electrical – Base (Integrated Hydraulic System), page 495* or Section *198 Electrical – Base (Modular Hydraulic System), page 497*.

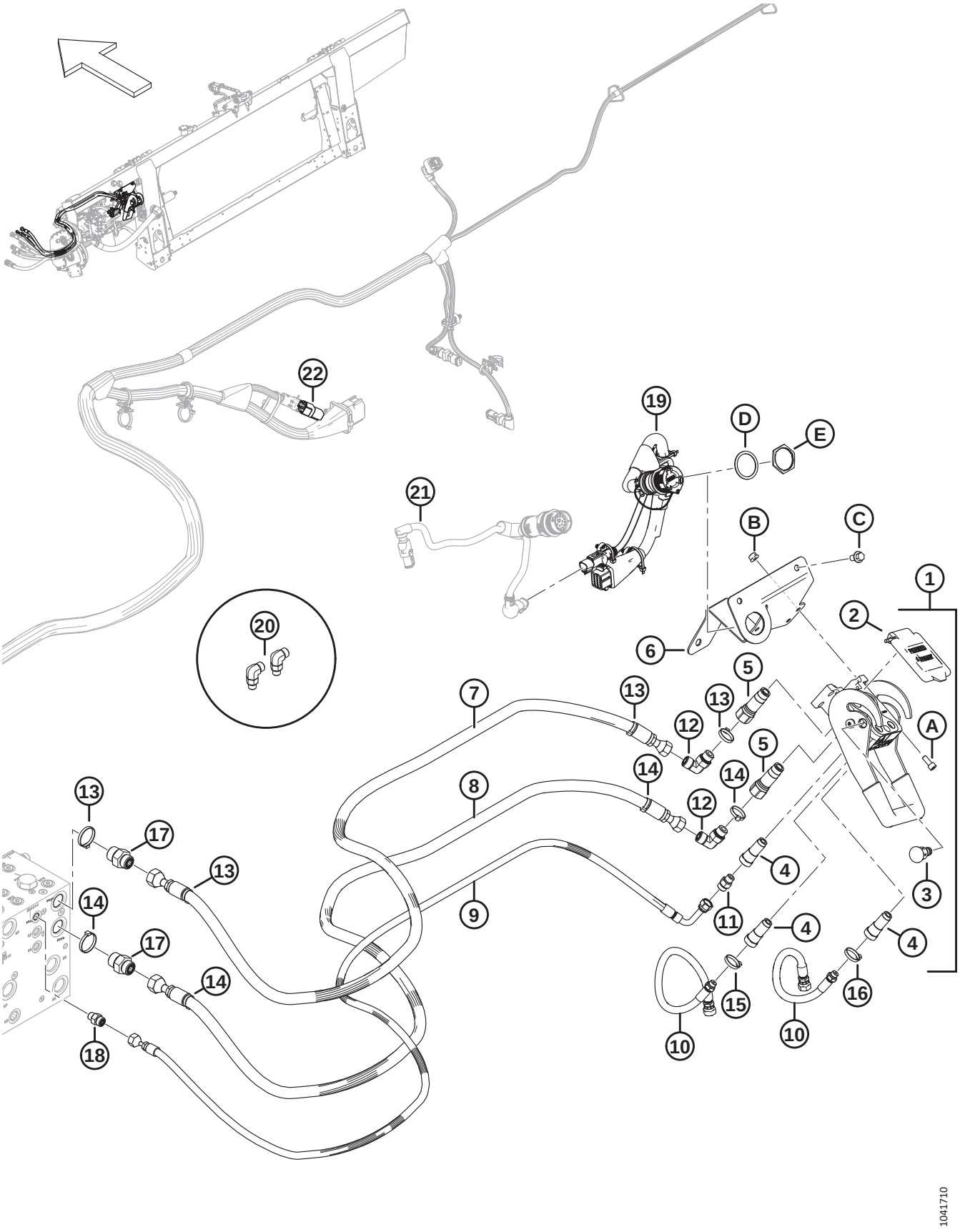
22
19
D
E
21
B
C
1
2
6
20
5
7
13
13
12
A
5
14
14
8
12
13
4
17
3
13
11
4
14
4
9
17
15
16
14
10
10
18

1041710

Ref	Part Number	Description	Qty	Serial Number
B	135337	NUT – HEX FLG CTR LK M8 X 1.25-8-AA1J		
C	136151	BOLT – HEX FLG HD TFL M10 X 1.5 X 16-8.8-AA1J		
D	134011	WASHER – LOCK SPRING, DEUTSCH HD, SIZE 24		
E	134010	NUT – PANEL, HD 30, SIZE 24		

229 (Option) Auger Flighting Kits

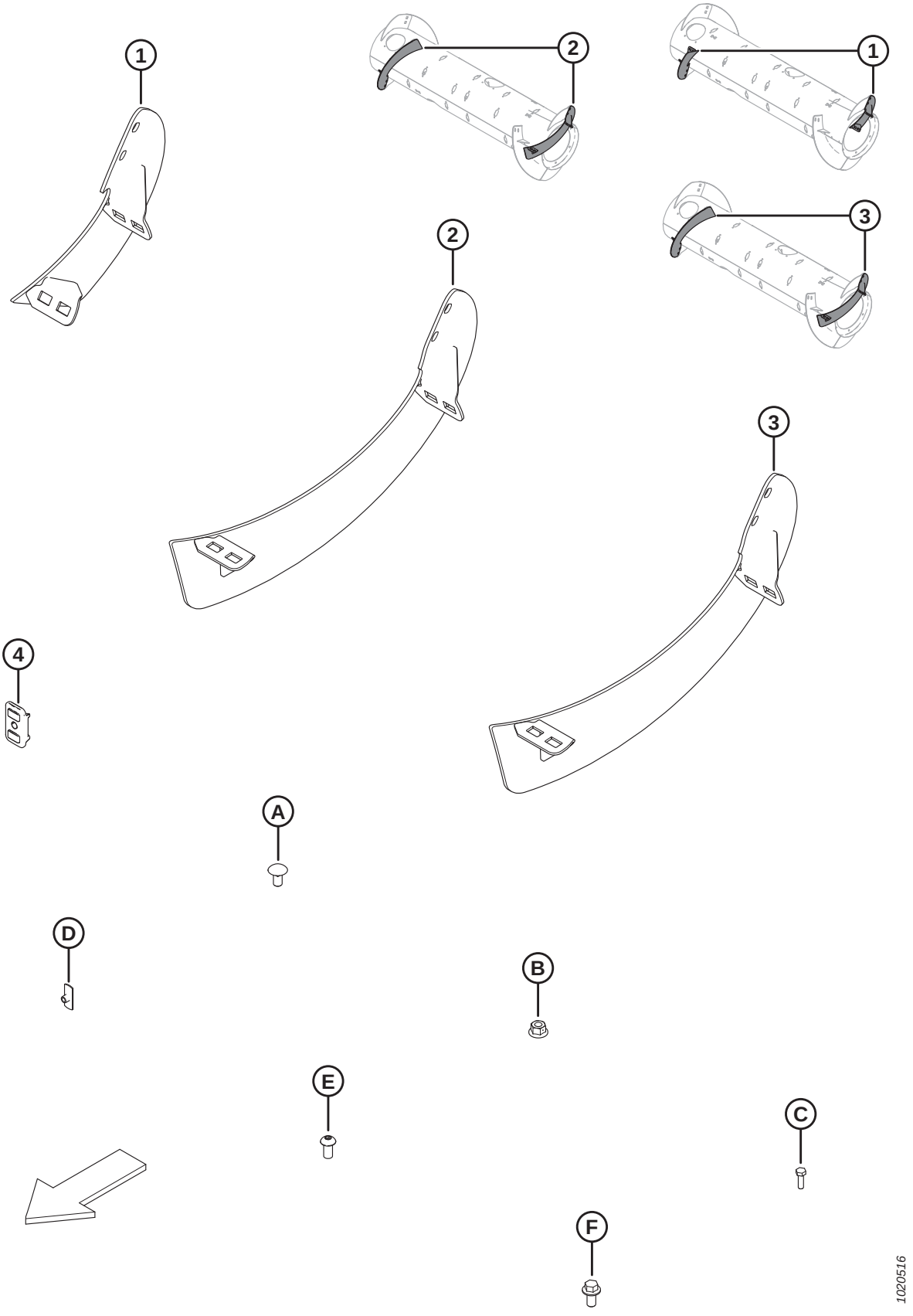

(OPTION) AUGER FLIGHTING KITS

NOTE:

Long flighting kits (B6400 and MD #287032) are used to convert the auger to the optional Ultra Narrow configuration. Refer to your header operator's manual for more information.

Ref	Part Number	Description	Qty	Serial Number
	B6400	KIT – FM100 RTD, WEAR RESISTANT FLIGHT [912]		
	287031	KIT – FM100 RTD, MED FLIGHT [913]		
	287032	KIT – FM100 RTD, LONG FLIGHT [914]		
1	NSS	FLIGHTING, RTD – RH, MED [915]	1	
	NSS	FLIGHTING, RTD – LH, MED [916]	1	
	287887	FLIGHTING, RTD – RH, MED (HIWEAR)	1	
	287888	FLIGHTING, RTD – LH, MED (HIWEAR)	1	
2	NSS	FLIGHTING, RTD – RH, LONG [917]	1	
	NSS	FLIGHTING, RTD – LH, LONG [918]	1	
3	287890	FLIGHTING, RTD – RH, LONG (HIWEAR)	1	
	287889	FLIGHTING, RTD – LH, LONG (HIWEAR)	1	
4	213084	PLUG – FLIGHTING SLOT	2	
A	136178	BOLT – RHSN M10 X 1.5 X 20-8.8-A3L		
B	135799	NUT – HEX FLG CTR LOC M10 X 1.5-10-A3L		
C	252703	BOLT – HEX HD TFL M6 X 1 X 20 X SPCL-12.9-AA2L		
D	197263	NUT – TEE M6 X 1		
E	135723	SCREW – HEX SOC BTN HD M10 X 1.5 X 20-10.9-A3L		
F	152655	BOLT – HEX FLG HD M10 X 1.5 X 20-8.8-A3L		

912. The kit includes Long Flighting kit (MD #287032). Kits are available through Whole Goods only.
913. The kit includes wear-resistant medium flighting, two plugs (MD #213084), hardware, and instructions.
914. The kit includes wear-resistant long flighting, two plugs (MD #213084), hardware, and instructions.
915. Service with medium right flighting (MD #287887).
916. Service with medium left flighting (MD #287888).
917. Service with long right flighting (MD #287890).
918. Service with long left flighting (MD #287889).

230 (Option) FM200 Full Interface Filler – FD2 Series

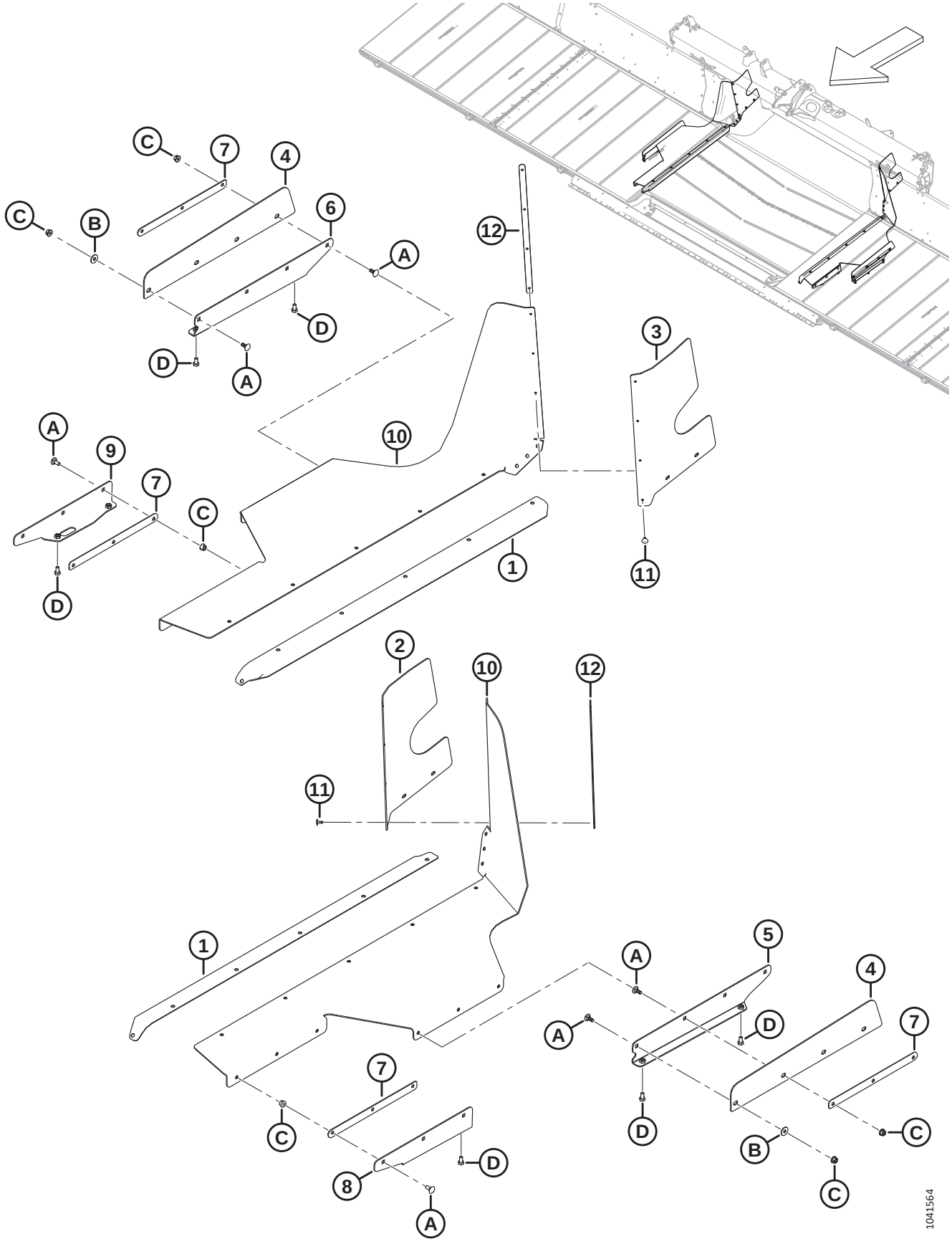

(OPTION) FM200 FULL INTERFACE FILLER – FD2 SERIES

Ref	Part Number	Description	Qty	Serial Number
	B7217	KIT – FULL INTERFACE FILLER FD2 [919]		
1	322750	SEAL – DRAPER FEED DECK	2	
2	328348	FILLER – LH REAR UPPER	1	
3	328349	FILLER – RH REAR UPPER	1	
4	344409	FILLER – LEG SIDE [920]	2	
	344336	KIT – SERVICE ONLY FULL FILLER [921]	A/R	
5	344412	SUPPORT – SIDE FILLER LH WELDT [922]	1	
	344336	KIT – SERVICE ONLY FULL FILLER [921]	A/R	
6	344413	SUPPORT – SIDE FILLER RH WELDT [923]	1	
	344336	KIT – SERVICE ONLY FULL FILLER [921]	A/R	
7	301065	PLATE – FILLER RETAINER	4	
8	301049	SUPPT – SIDE FILLER LH WELDT	1	
9	301047	SUPPT – SIDE FILLER RH WELDT	1	
10	301034	FLAP – FULL FILLER FLEX	2	
11	293053	RIVET – POP	8	
12	276770	PLATE – FILLER RETAINER	2	
A	197171	BOLT – RHSN M8 X 1.25 X 20-8.8-ZINC		
B	184709	WASHER – FLAT LARGE M8-200HV		
C	135337	NUT – HEX FLG CTR LK M8 X 1.25-8-AA1J		
D	50139	BOLT – HEX HD TFL M8 X 1.25 X 16-8.8-AA1J		

919. European Market only. Provides additional sealing between float module and header. Kits are available through Whole Goods only.
920. Was previously MD #314671 in superseded bundle B7217. To service the superseded part, order service kit MD #344336.
921. The Full Filler Service kit is used to service superseded filler parts (MD #301067, 301069, 314419, 314420, and 314671).
922. Was previously MD #314419 and MD #301069 in superseded bundle B7217. To service the superseded parts, order service kit MD #344336.
923. Was previously MD #314420 and MD #301067 in superseded bundle B7217. To service the superseded parts, order service kit MD #344336.

231 (Option) FM200 Fillers and Links

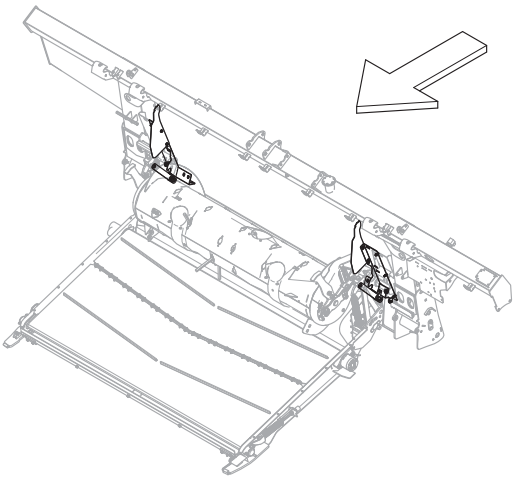

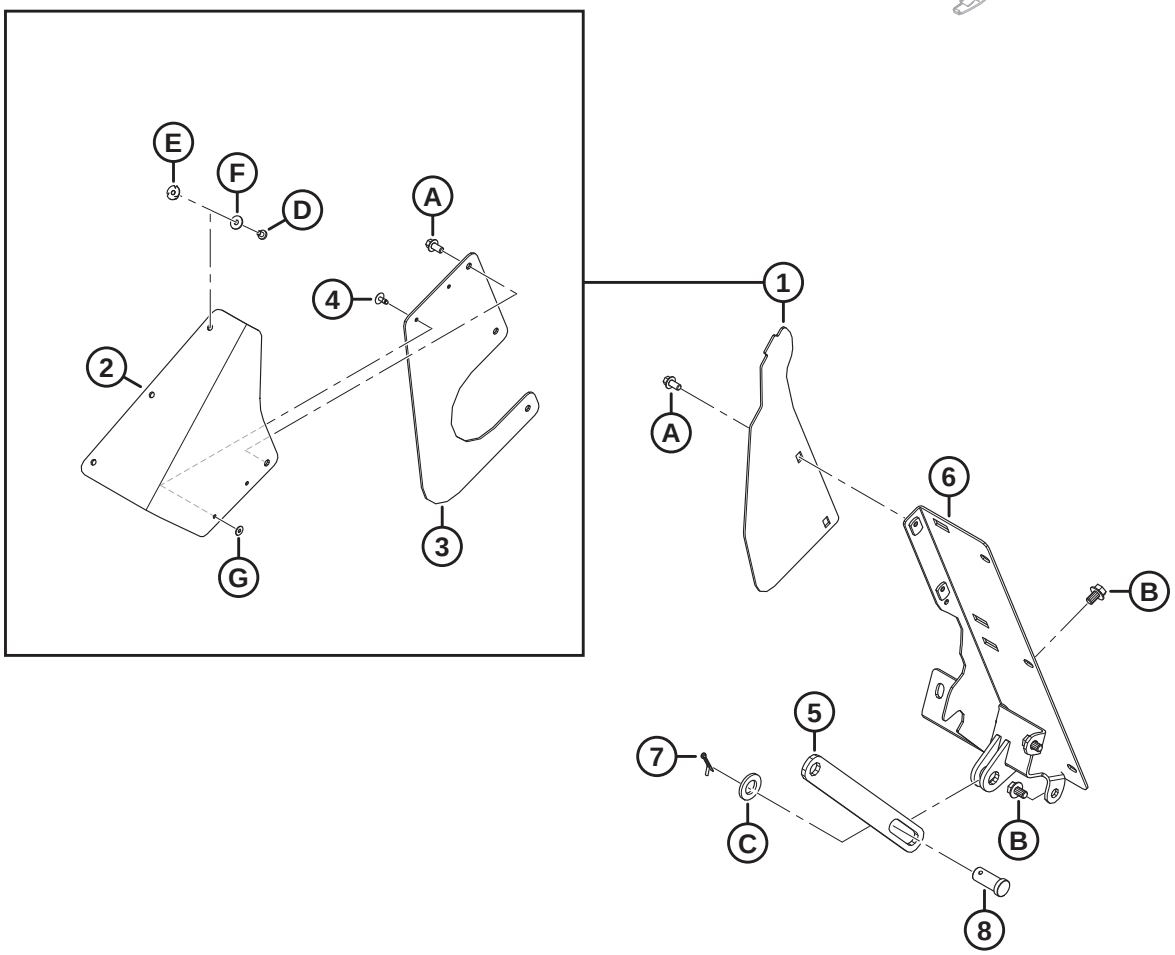

1039547

(OPTION) FM200 FILLERS AND LINKS

Ref	Part Number	Description	Qty	Serial Number
	B7342	KIT – FM200 ADAPTER FILLERS AND LINKS [924]		
1	357512	KIT – DUST COVER SIDES [925]	A/R	
2	357174	FLAP – DUST COVER FILLER	2	
3	357173	COVER – FEED AUGER SIDE	2	
4	293053	RIVET – POP	4	
5	322914	BAR – AUGER SUPPORT LIMITER	1	
6	NSS	FILLER – WELDMENT LH	1	
	NSS	FILLER – WELDMENT RH	1	
7	18648	PIN – COTTER 3/16 DIA X 1.25 ZP	2	
8	11814	PIN – CLEVIS, 23.8 MM, 30 MM ZN PL	2	
A	136485	BOLT – HEX FLG HD TFL M8 X 1.25 X 16-8.8-AA1J		
B	136151	BOLT – HEX FLG HD TFL M10 X 1.5 X 16-8.8-AA1J		
C	112130	WASHER – HARD ASTM F4363/4 IN. NOM. ID AB0C		
D	252291	SCREW – PAN HD M6 X 1 X 8-8.8-AA1J		
E	252051	NUT – TEE M6		
F	184706	WASHER – FLAT LARGE M6-200HV		
G	293054	WASHER – FLAT LARGE M5-200HV-AA1J [926]		

924. The FM200 Adapter Fillers and Links kit is used to convert John Deere X9 Series-configured FM200 Float Modules for use with other combine brands and models. Kits are available through Whole Goods only.
925. This kit is used to service units with superseded side covers (MD #347558). The kit includes two dust cover filler flaps (MD #357174), two feed auger side covers (MD #357173), four pop rivets (MD #293053), and hardware.
926. Washer (MD #293054) is not included in the kit; order this washer separately.

232 (Option) Hillside Extension

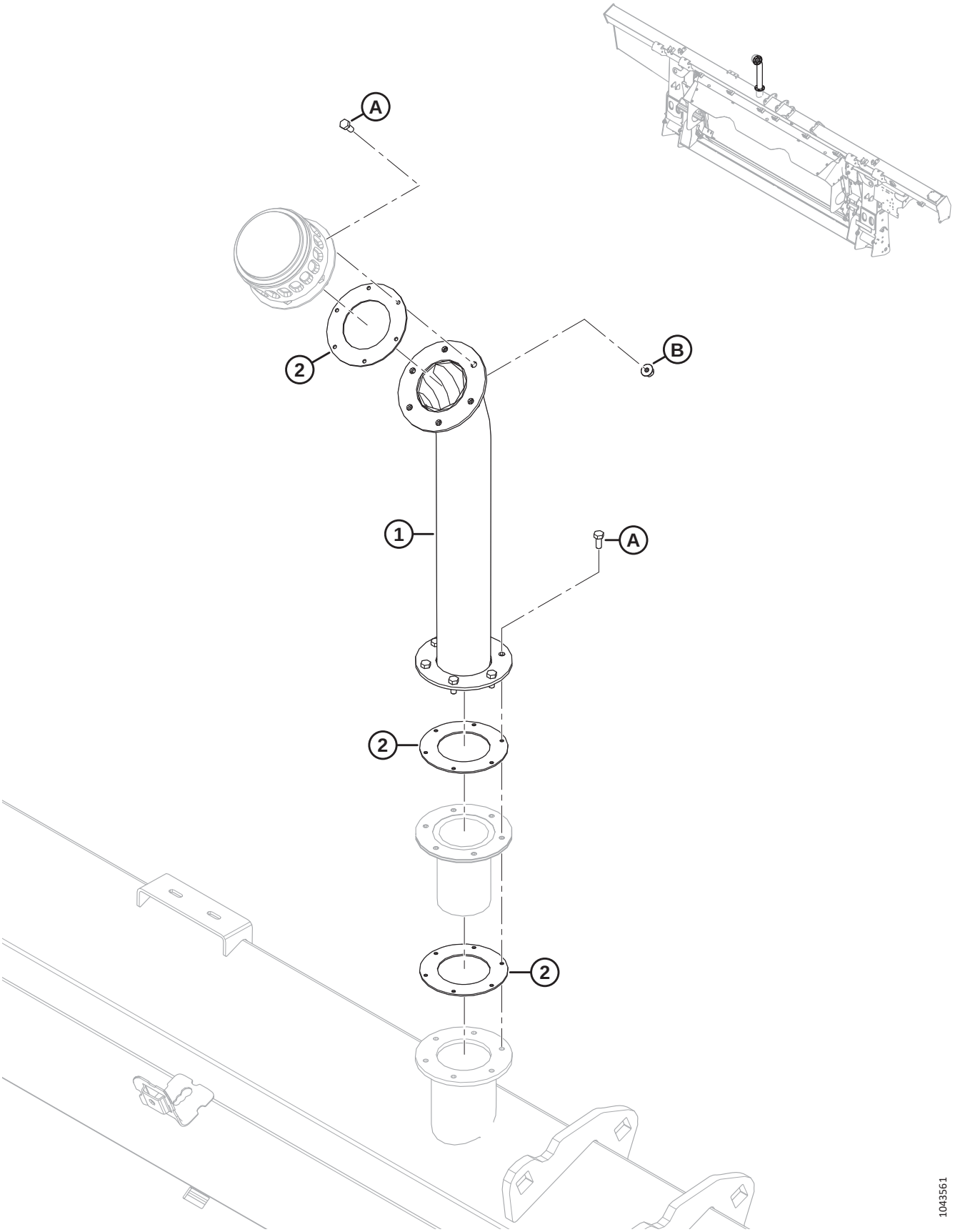

(OPTION) HILLSIDE EXTENSION

Ref	Part Number	Description	Qty	Serial Number
	B7542	KIT – HYDRAULIC RESERVOIR FILL EXTENSION [927]		
	284975	KIT – HYDRAULIC RESERVOIR FILL EXTENSION [928]		
1	NSS	HYD RESERVOIR FILL EXTENSION	1	
2	312706	KIT – OIL FILL GASKETS [929]	A/R	
	166450	DECAL – WARNING, HOT SURFACE	2	
A	320397	SCREW – HEX HD TFL M5 X 0.8 X 12-8.8-PLAIN (2022 AND LATER) [930]		421190–
	135873	SCREW – MACH #10-32 X 0.5 IN. HEX (2021 AND PRIOR) [930]		–421189
B	136635	NUT – HEX FLG CTR LOC M5 X 0.8-8-AA1J		

927. The kit includes hydraulic reservoir fill extension (NSS), 3 gaskets (NSS), 2 decals (MD #166450), 12 metric screws (MD #320397), 6 metric nuts (MD #136635), and instructions. For model year 2021 and prior machines with imperial threaded holes, order imperial screws (MD #135873) separately. Kits are available through Whole Goods only.
928. The kit includes hydraulic reservoir fill extension (NSS), 3 gaskets (NSS), 2 decals (MD #166450),12 metric screws (MD #320397), 6 metric nuts (MD #136635), and instructions. For model year 2021 and prior machines with imperial threaded holes, order imperial screws (MD #135873) separately.
929. The Oil Fill Gaskets kit includes two gaskets (NSS).
930. On model year 2021 and prior units, use imperial screw (MD #135873) to prevent cross threading a metric bolt into an imperial threaded hole.

233 (Option) Integration Kit – CLAAS

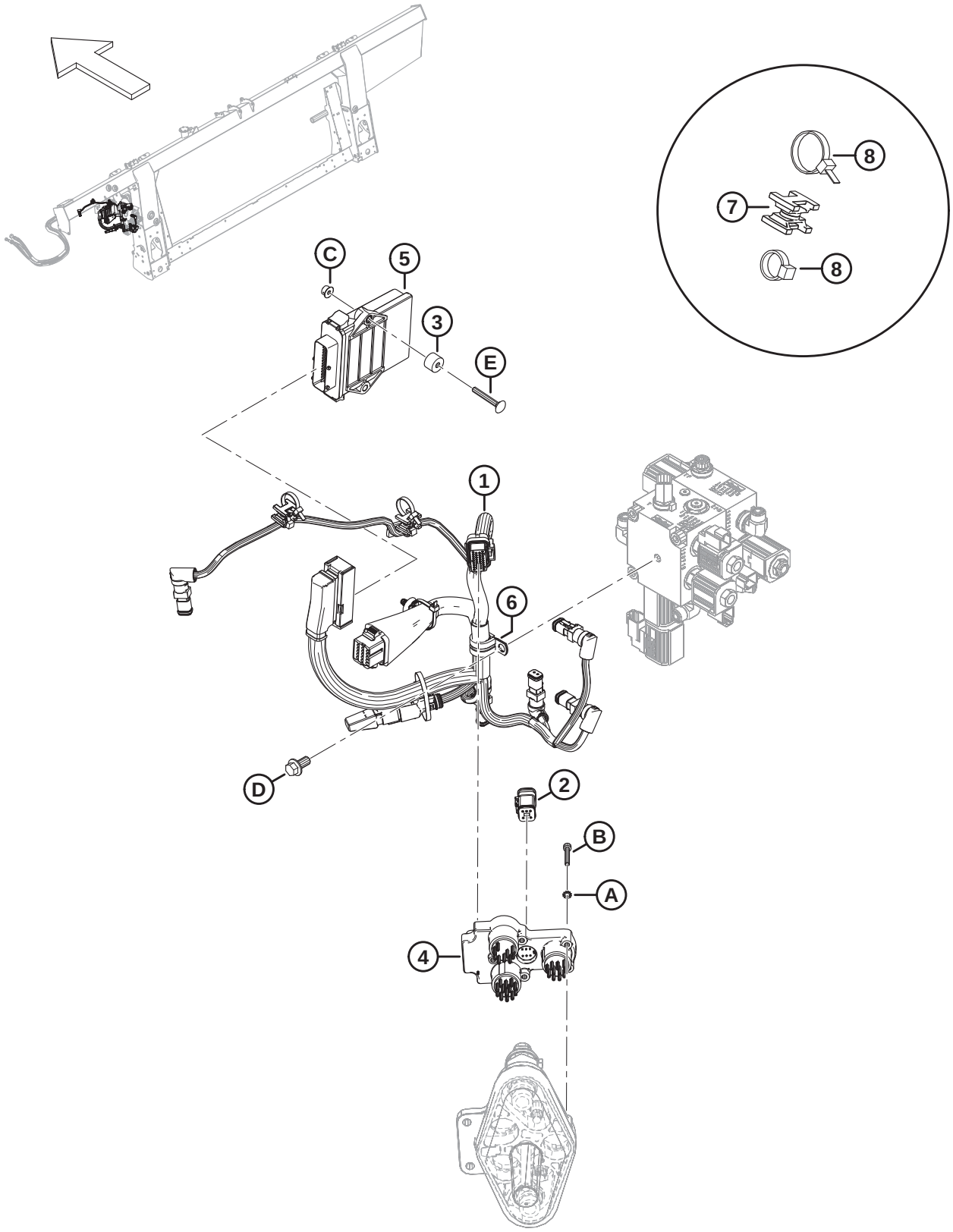

(OPTION) INTEGRATION KIT – CLAAS

Ref	Part Number	Description	Qty	Serial Number
	B7231	KIT – INTEGRATION, CLAAS [931]		
1	357119	HARNESS – FM2 COMP, CLAAS INTEGRATION CONTROLLER	1	
	283215	DIODE PACK – 6A DIODE [932]	1	
2	337352	PLUG – TERMINATOR	1	
3	328913	SPACER	2	
4	500605	COUPLER MODULE	1	
5	328065	MODULE – HEADER INTEGRATION	1	
6	135709	CLAMP – INSULATED 3/4 IN.	1	
7	134442	SPACER – DUAL SWIVEL SADDLE	2	
8	21763	FASTENER – CABLE TIE, BLACK	4	
A	184703	WASHER – EXT LK TOOTH M5-200HV-AF0C		
B	173117	SCREW – HEX SOC HD M5 X 0.8 X 35-8.8-AA1J		
C	152668	NUT – HEX FLG CTR LOC M6 X 1-8		
D	152655	BOLT – HEX FLG HD M10 X 1.5 X 20-8.8-AA1J		
E	136731	BOLT – RHSN M6 X 1 X 45-8.8-AA1J		

931. Kits are available through Whole Goods only.
932. Service part for CLAAS completion harness MD #337119.

234 (Option) Module Programming Kit

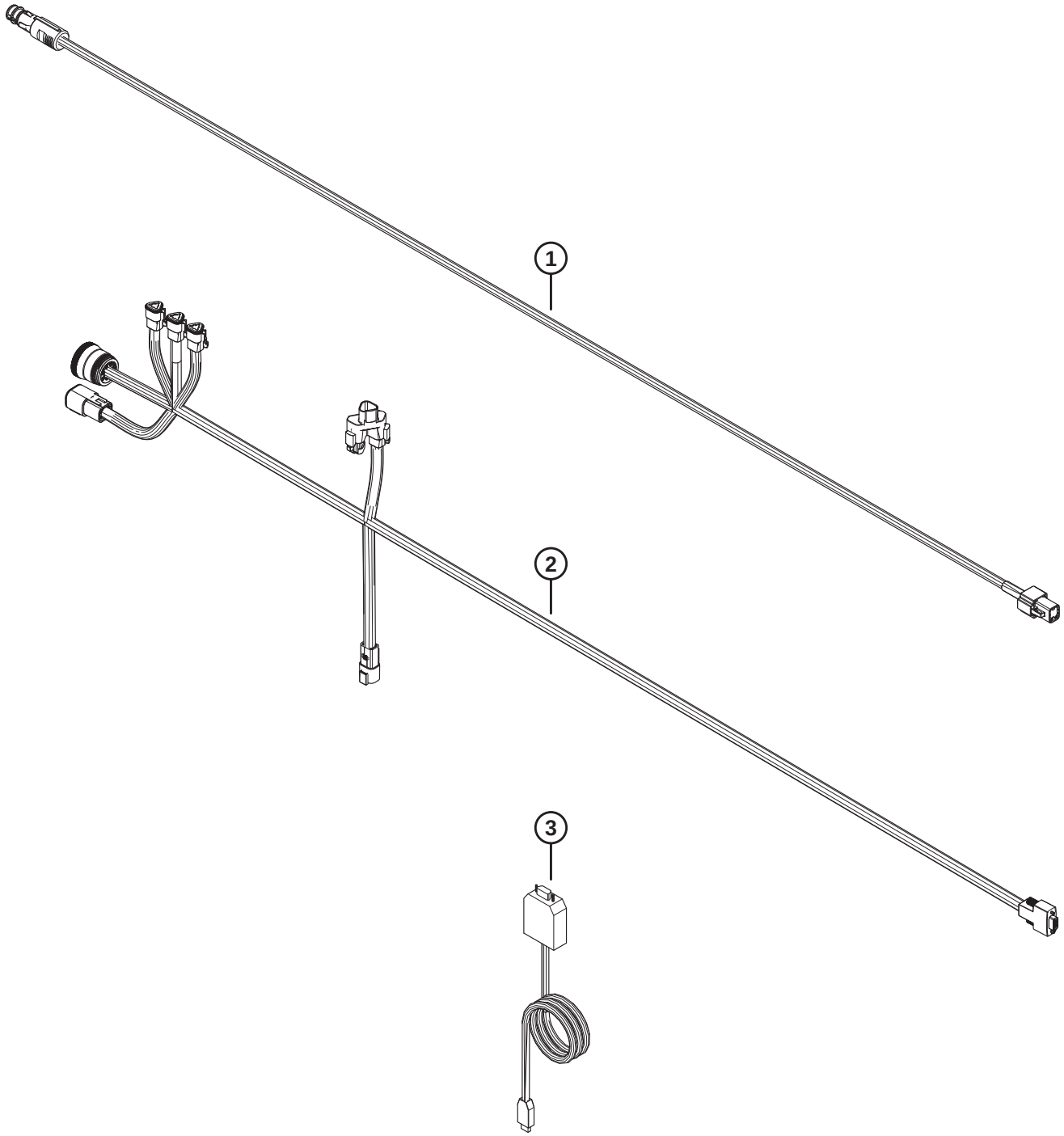

(OPTION) MODULE PROGRAMMING KIT

NOTE:

This kit is for FM200 Float Modules configured for John Deere X9 Series combines and is for Dealer use only.

Ref	Part Number	Description	Qty	Serial Number
	368385	KIT – MODULE PROGRAMMING [933]		
1	308943	HARNESS – EXT CAB PWR BOSCH/AUS	1	
2	500557	HARNESS – DIAG., PROGRAMMING	1	
3	500593	CABLE – PCAN TO USB	1	

933. The Module Programming kit includes all listed parts and instructions. This kit is for Dealer use only.

235 (Option) Stripper Bars

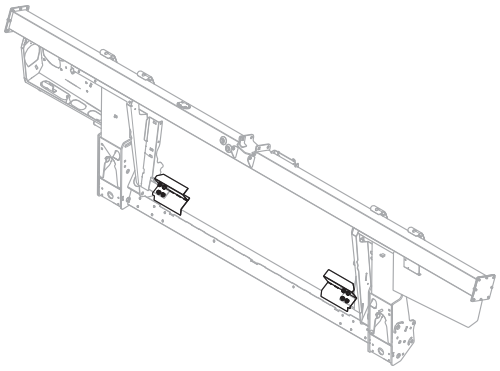

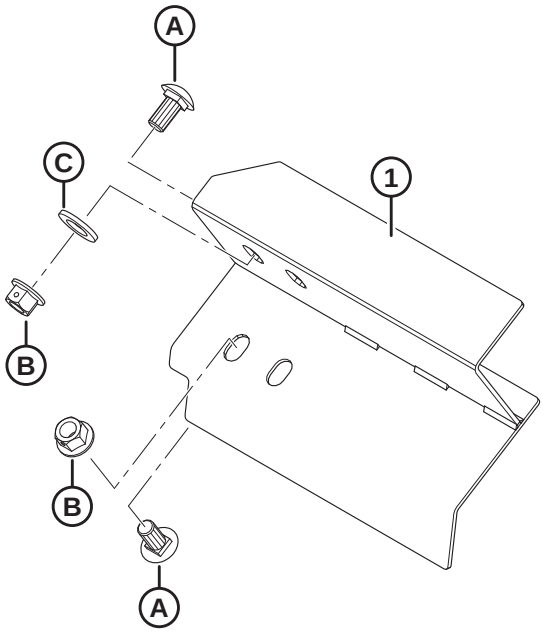

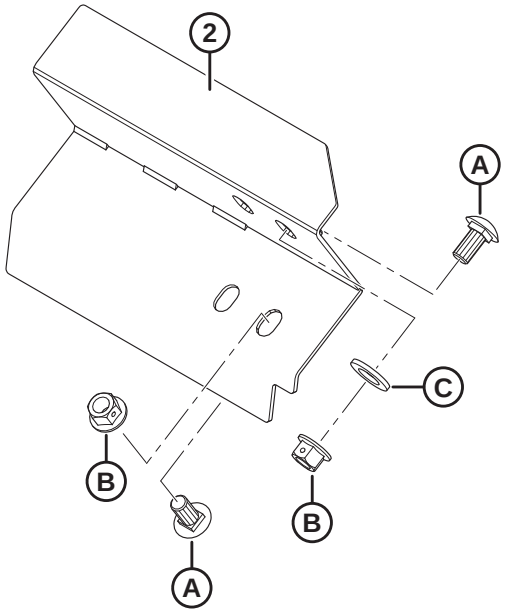

1023852

(OPTION) STRIPPER BARS

Ref	Part Number	Description	Qty	Serial Number
	B6042	KIT – STRIPPER BARS, 265 MM LG (WITHOUT CUTOUT) [934]		
	B6043	KIT – STRIPPER BARS, 265 MM LG (WITH CUTOUT) [934]		
	B6044	KIT – STRIPPER BARS, 325 MM LG [934]		
	B6045	KIT – STRIPPER BARS, 365 MM LG [934]		
	B6046	KIT – STRIPPER BARS, 403 MM LG [934]		
	B6213	KIT – STRIPPER BARS, 515 MM LG [934]		
1	213523	STRIPPER – WELDMENT, LEFT (265 MM LG W/O CUTOUT)	1	
	276899	STRIPPER – WELDMENT, LEFT (265 MM LG W/ CUTOUT) [935]	1	
	213573	STRIPPER – WELDMENT, LEFT (325 MM LG)	1	
	213567	STRIPPER – WELDMENT, LEFT (365 MM LG)	1	
	213561	STRIPPER – WELDMENT, LEFT (403 MM LG)	1	
	213579	STRIPPER – WELDMENT, LEFT (515 MM LG)	1	
2	213525	STRIPPER – WELDMENT, RIGHT (265 MM LG W/O CUTOUT)	1	
	276900	STRIPPER – WELDMENT, RIGHT (265 MM LG W/ CUTOUT) [935]	1	
	213574	STRIPPER – WELDMENT, RIGHT (325 MM LG)	1	
	213568	STRIPPER – WELDMENT, RIGHT (365 MM LG)	1	
	213562	STRIPPER – WELDMENT, RIGHT (403 MM LG)	1	
	213580	STRIPPER – WELDMENT, RIGHT (515 MM LG)	1	
A	135903	BOLT – RHSN M12 X 1.75 X 25-8.8-A3L		
B	136431	NUT – HEX FLG CTR LOC M12 X 1.75-10-A3L		
C	184717	WASHER – FLAT REG M16-200HV-AA1J		

934. Kits are available through Whole Goods only.
935. For John Deere S6X0 Series combines.

Index

795 430
1709 450
4761 98
4762 ..... 284, 290
5512 414
6647 414
7642 ..... 246, 424, 520, 546, 570
7674 ..... 254, 256, 258
9213 430
9333 430
11695 98
11814 ..... 434, 588
13125 ..... 4, 8, 60, 62, 64, 314, 514, 532
13617 462
16235 122
16266 12
16681 ..... 112, 114, 116, 118, 120
17006 394
18592 528
18598 432
18600 ..... 284, 290
18601 ..... 170, 172, 232, 234, 434, 446
18603 ..... 98, 470
18604 54
18605 ..... 52, 122
18606 ..... 98, 376, 380
18607 ..... 2, 112, 114, 116, 118, 120, 122, 124, 128, 132, 304, 412
18608 ..... 284, 302, 306, 352, 444, 450
18609 ..... 300, 354, 444, 468
18619 314
18621 ..... 102, 104, 106, 112, 114, 118, 120
18624 ..... 362, 370
18626 ..... 108, 110
18629 ..... 108, 110
18637 ..... 28, 30, 32
18638 ..... 426, 432
18648 ..... 102, 104, 106, 108, 110, 286, 302, 314, 352, 434, 588
18669 ..... 290, 292
18671 ..... 52, 122, 288, 302, 314, 352, 442
18704 ..... 2, 112, 114, 118, 120
18768 ..... 376, 380
18798 ..... 304, 390
18867 ..... 28, 30, 32
18898 ..... 452, 456
18916 ..... 304, 354
19542 316
19809 532
19958 ..... 116, 122
20312 444
21010 462
21032 302
21061 394
21194 98
21235 ..... 426, 430
21301 ..... 124, 128, 132, 134
21363 ..... 392, 400
21383 326
21540 ..... 2, 288, 450
21572 364
21763 ..... 164, 188, 194, 204, 242, 244, 292, 302, 376, 380, 394, 406, 468, 472, 476, 496, 498, 500, 502, 530, 536, 538, 542, 562, 576, 592
21859 ..... 374, 378
22072 56
23163 506
23164 260
23165 ..... 260, 388, 506
23950 278
23957 278
25991 278
26429 314
30144 ..... 102, 104, 106
30191 404
30228 356
30316 ..... 416, 420
30368 326
30441 ..... 34, 36
30463 450
30505 ..... 34, 36, 432, 434
30515 326
30520 ..... 122, 302, 352
30627 ..... 56, 376, 380, 420, 446
30628 ..... 246, 400, 404, 466
30629 ..... 102, 104, 106
30630 ..... 126, 130, 132, 134, 400, 528
30631 ..... 54, 254, 256, 258, 388
30632 ..... 376, 380, 410, 512, 518, 552, 560
30636 448
30655 ..... 56, 126, 130
30660 ..... 186, 188, 190, 196, 200, 202, 206, 210, 388
30661 ..... 374, 378
30693 470
30701 412
30702 412
30715 ..... 56, 304, 308, 324, 454, 456
30716 ..... 366, 372
30753 ..... 186, 190, 196, 198, 202, 206, 210, 406, 442, 472, 476, 510, 516, 530, 536, 538, 552, 560
30856 54
30934 ..... 376, 380
30971 ..... 164, 166, 170, 172, 174, 178, 182, 184, 212, 216, 218, 390, 394, 402, 476, 482, 488, 490, 492, 494, 512, 516
31465 432

31774 ..... 2, 126, 130, 132, 446
32070 ..... 260, 506
32247 532
32879 278
32880 278
36651 ..... 416, 420
39272 306
40095 416
40701 ..... 164, 206, 208, 218, 220, 224, 228, 490, 494, 510, 516, 524, 530, 536, 538, 552, 560, 566, 580
40702 ..... 164, 188, 194, 204, 394, 468, 488, 490, 492, 494, 510, 516, 524, 530, 552, 560, 566, 580
40703 ..... 164, 204, 206, 220, 224, 228, 394, 468, 488, 490, 492, 494, 536, 538
40704 ..... 164, 188, 194, 204, 394, 468, 488, 490, 492, 494, 536, 538
42592 34
43219 250
44209 ..... 164, 166, 170, 172, 232, 234, 390, 402, 474, 476, 480, 488, 490, 492, 494, 524, 550, 558, 566, 580
44210 ..... 168, 172, 174, 178, 182, 184, 216, 218, 374, 378, 394, 402, 476, 480, 482, 488, 490, 510, 518, 530, 534, 538, 550, 558
45427 470
47225 ..... 290, 292
49227 ..... 164, 196, 198, 208, 468, 488, 490, 492, 494, 510, 516, 524, 530, 552, 560, 566, 580
49232 ..... 164, 218, 490, 494, 510, 516, 524, 530, 536, 538, 552, 560, 566, 580
49306 ..... 374, 378
49378 ..... 314, 350
49904 444
50071 246
50083 426
50139 ..... 284, 452, 456, 586
50140 388
50154 428
50155 ..... 2, 44, 46, 48, 130, 134, 428, 432
50186 326
50193 ..... 12, 162, 282, 350
50219 ..... 164, 166, 182, 184, 220, 224, 228, 468, 482, 490, 494, 510, 512, 516, 524, 530, 534, 536, 538, 550, 552, 558, 560, 566, 580
50220 ..... 166, 394, 402, 474, 476, 480, 482, 488, 490, 492, 494
50222 ..... 402, 476
50223 ..... 168, 172, 374, 378, 402, 476, 478, 482
52129 2
100500 ..... 52, 74, 78, 82, 88, 92, 96, 444
100577 166
100709 100
100710 100
100712 100
100714 100
100715 100
100717 100
100718 100
100719 100
100720 100
100721 100
100722 100
100723 100
100726 100
100862 462
101007 ..... 302, 352
101095 ..... 362, 370
101897 ..... 28, 30, 32
102264 ..... 8, 60, 62, 64, 314, 362, 370, 468
102629 100
102630 100
102711 ..... 166, 560
103361 284
103575 166
103879 ..... 116, 122
108172 ..... 356, 358, 376, 380
109773 ..... 500, 502
111521 ..... 124, 128
111528 ..... 452, 456
111545 ..... 474, 480
112130 ..... 42, 434, 588
112823 ..... 216, 218
112866 402
112868 ..... 402, 492, 494
113152 100
113153 100
113222 ..... 52, 74, 78, 82, 88, 92, 96, 444
113229 98
113561 ..... 308, 532
113566 306
113799 ..... 522, 564
113813 284
113937 ..... 74, 78, 82, 88, 92, 96
114142 530
114143 530
115146 ..... 260, 506
115670 ..... 74, 78, 82, 88, 92, 96
115759 260
118011 462
118239 308
119529 ..... 366, 372
119558 ..... 366, 368, 370
119560 366
119565 366
119593 ..... 362, 370
119623 362
119641 362
119653 ..... 366, 368
119654 ..... 366, 368, 370
119655 366

119656 366
119666 362
119667 362
119672 ..... 362, 370
119691 ..... 362, 370
119692 ..... 368, 370
119693 ..... 368, 370
119694 368
119696 ..... 362, 370
119697 ..... 362, 370
119705 362
119706 362
119725 ..... 362, 370
119726 ..... 366, 372
119737 372
119738 ..... 362, 370
119745 370
119757 ..... 362, 370
119766 366
120845 ..... 34, 36
120901 98
123180 ..... 424, 438, 520, 546, 570
123318 396
123406 432
123978 468
125377 ..... 194, 204, 206
129148 ..... 510, 516
129149 ..... 550, 558
129313 260
129481 ..... 534, 538
129772 ..... 536, 542
129773 536
129800 ..... 524, 566, 580
129801 ..... 524, 566, 580
129859 ..... 550, 558
129860 ..... 550, 558
129965 ..... 536, 544
129976 ..... 524, 566, 580
129977 ..... 524, 566, 580
130283 460
132117 506
132531 34
132607 ..... 34, 36
133047 446
133136 470
133138 532
133241 528
133242 528
133372 462
133439 532
133631 416
133632 418
133634 416
133641 422
133877 424
133942 390
133992 ..... 302, 352
134010 ..... 526, 568, 582
134011 ..... 526, 568, 582
134043 562
134437 396
134442 ..... 242, 244, 376, 380, 406, 496, 498, 542, 562, 592
134612 ..... 534, 542
134728 ..... 242, 244, 496, 498, 512, 530, 544
134730 ..... 242, 244, 496, 498, 512, 530, 542
135148 278
135156 ..... 304, 354, 428, 432
135157 432
135226 206
135234 468
135235 382
135248 364
135266 ..... 164, 196, 198
135267 ..... 516, 550, 558
135290 430
135301 562
135319 316
135335 ..... 162, 392
135336 22
135337 ..... 4, 8, 10, 22, 28, 30, 32, 34, 38, 40, 42, 54, 58, 60, 62, 64, 122, 156, 160, 176, 180, 182, 184, 216, 218, 250, 252, 284, 290, 292, 308, 316, 324, 376, 380, 388, 440, 464, 466, 512, 518, 526, 530, 536, 540, 552, 560, 568, 574, 582, 586
135369 ..... 304, 428, 432
135377 250
135400 ..... 474, 480
135401 ..... 284, 410
135443 ..... 186, 196, 198, 206, 216, 218, 220, 224, 228
135444 ..... 188, 194, 204, 490, 494, 510, 516, 552, 560
135523 316
135554 ..... 394, 402, 474, 476, 480, 482, 492, 494
135587 482
135598 510
135626 460
135630 ..... 346, 348, 460
135696 ..... 22, 310, 316
135709 ..... 534, 542, 592
135716 302
135723 ..... 438, 584
135734 ..... 474, 480, 482, 492, 494
135778 ..... 164, 182, 184, 186, 188, 190, 194, 196, 198, 202, 204, 206, 208, 220, 224, 228, 282, 286, 468, 490, 494, 512, 516, 524, 530, 536, 538, 550, 552, 558, 566, 580
135780 ..... 164, 170, 172, 232, 234, 488, 492
135783 ..... 284, 362, 370, 392, 400, 414
135785 ..... 22, 28, 30, 32, 34, 216, 218, 222, 224, 228, 284, 364, 370, 376, 380, 388, 434, 458, 466

135786 .....164, 402, 476, 490, 494, 512, 516, 524, 530, 534, 538, 550, 560, 566, 580
135788 .....164, 170, 172, 174, 178, 182, 184, 212, 216, 218, 394, 488, 490, 492, 494
135789 .....394, 488, 490
135799 .....4, 8, 14, 22, 28, 30, 32, 34, 50, 54, 102, 104, 106, 108, 110, 142, 144, 146, 154, 156, 158, 160, 162, 170, 172, 176, 180, 216, 218, 222, 224, 228, 246, 284, 288, 290, 292, 298, 304, 310, 316, 330, 334, 364, 370, 376, 380, 384, 388, 416, 420, 422, 426, 434, 436, 438, 440, 446, 452, 456, 458, 462, 466, 484, 508, 514, 522, 528, 532, 548, 554, 556, 564, 572, 578, 584
135800 .....356, 358
135821 .....394, 476, 482, 488, 490, 494
135865 .....164, 182, 184, 188, 194, 196, 198, 202, 206, 208, 220, 224, 226, 228, 286, 382, 402, 468, 476, 478, 482, 490, 494, 510, 512, 516, 524, 530, 534, 536, 538, 550, 552, 558, 560, 566, 580
135866 .....164, 168, 170, 172, 230, 232, 234, 394, 480, 482, 488, 490, 492, 494, 524, 530, 534, 538, 550, 558, 566, 580
135867 .....164, 168, 172, 174, 178, 182, 184, 216, 218, 374, 378, 402, 476, 480, 482, 490, 492, 494, 510, 512, 516, 518
135868 .....164, 170, 172, 174, 178, 182, 184, 212, 216, 218, 394, 402, 476, 478, 482, 488, 490, 492, 494
135873 .....390, 590
135888 490
135889 212
135894 ..... 22, 34, 38, 40, 42, 250, 252, 512, 518, 552, 560
135900 ..... 56, 376, 380, 428, 556
135901 .....402, 476
135903 ..... 28, 30, 32, 36, 38, 40, 42, 112, 114, 116, 118, 120, 484, 514, 532, 548, 596
135952 166
135957 ..... 168, 172, 374, 378, 402, 476, 482
135959 130
135995 .....444, 468
136005 .....66, 68, 70, 72, 346, 348
136024 402
136036 .....66, 68, 70, 72, 296, 340, 342, 344, 346, 348, 462, 532
136050 466
136057 ..... 54, 64
136088 450
136089 ..... 402, 476, 480, 482
136095 .....186, 190, 194, 196, 198, 202, 204, 206, 208, 468, 482, 510, 516, 534, 538, 550, 558, 580
136106 .....474, 480
136108 .....534, 538
136109 482
136113 .....376, 452, 456
136122 .....2, 6, 102, 104, 106, 108, 288
136124 2
136137 ..... 54, 406
136141 ..... 54, 514
136143 ..... 2, 112, 114, 116, 118, 120, 122
136144 .....194, 206, 468, 534, 538, 558
136145 .....186, 190, 202, 220, 224, 228
136146 ..... 188, 196, 198, 208, 220, 224, 228
136149 .....402, 476
136150 .....186, 190, 202
136151 ..... 8, 50, 60, 62, 64, 142, 144, 146, 236, 238, 240, 330, 334, 450, 470, 526, 530, 568, 582, 588
136159 .....284, 290
136167 .....254, 256
136178 ..... 22, 290, 292, 298, 436, 438, 446, 532, 572, 584
136181 510
136209 ..... 126, 130, 132, 134
136211 .....60, 62, 64, 236, 238, 240
136219 550
136220 ..... 490, 494, 524, 566, 580
136231 .....22, 310, 452, 456
136240 .....194, 204, 206
136244 ..... 168, 172, 232, 234
136245 .....170, 172, 174, 178, 212, 216
136246 480
136248 462
136249 382
136269 .....166, 390
136291 .....126, 130, 350, 432, 522, 564
136300 ..... 156, 160, 250, 252, 364
136302 388
136308 .....462, 472, 478
136310 .....108, 110
136312 296
136324 134
136325 .....220, 224, 228
136326 .....220, 224, 228
136327 .....216, 218
136337 .....402, 478
136339 .....12, 316, 366, 388
136342 .....12, 316, 366, 388
136347 ..... 402, 476, 482, 492, 494
136355 .....170, 172, 176, 180, 214, 216
136378 .....350, 434
136395 .....154, 156, 160, 330, 334, 384
136399 .....162, 406
136401 .....126, 130
136431 ..... 4, 22, 28, 30, 32, 34, 36, 38, 40, 42, 56, 98, 112, 114, 116, 118, 120, 124, 130, 132, 134, 140, 142, 144, 146, 154, 156, 304, 308, 310, 316, 330, 334, 350, 354, 376, 380, 392, 400, 406, 428, 432, 440, 448, 462, 470, 472, 478, 482, 508, 514, 522, 528, 532, 548, 554, 556, 564, 574, 578, 596
136440 .....102, 106, 108, 284, 304, 354, 362, 370, 406, 428, 432, 470

136441 428
136442 .....170, 172, 176, 180, 186, 188, 192, 194, 196, 200, 202, 204, 210
136443 130
136445 122
136446 ..... 126, 130, 132, 304
136447 .....402, 476, 482
136473 ..... 56, 406
136476 ..... 54, 514
136477 288
136483 480
136485 .....122, 248, 250, 252, 316, 390, 452, 456, 588
136486 .....176, 180, 182, 184, 216, 218
136492 10
136495 ..... 54, 170, 172, 176, 180
136506 ..... 440, 508, 532, 556
136512 .....2, 54
136513 .....2, 56
136524 166
136527 216
136540 .....186, 188, 190, 200, 202, 210, 220, 224, 228
136561 ..... 248, 250, 254, 256, 258, 388, 482
136592 ..... 124, 130, 454, 456
136595 250
136596 446
136604 248
136613 248
136625 532
136635 .....250, 590
136640 ..... 4, 24, 154, 156, 158, 330, 334
136653 382
136654 382
136655 .....244, 292, 442, 496, 498, 502, 534, 542, 576
136671 6
136684 .....480, 492, 494
136701 .....2, 102, 106, 108
136702 .....126, 130
136704 446
136717 .....522, 564
136731 .....542, 592
136736 ..... 22, 432
136741 .....232, 234
136746 .....182, 184
136748 .....8, 252, 294, 562
136749 .....14, 298, 362, 370
136755 470
136757 432
136759 ..... 34, 38, 40, 42, 126, 130, 316, 388, 424
136766 .....402, 476
136771 502
136773 ..... 290, 292, 304, 308, 388
136779 ..... 176, 180, 182, 216
136824 .....38, 40, 42, 54, 250, 252
136842 .....126, 130
136846 .....402, 476
136848 2
136850 166
136857 304
136882 .....124, 128
136886 502
136887 2
136900 396
137092 356
137118 356
137375 ..... 98, 124, 128, 374, 378
137476 ..... 124, 128, 132, 134
137519 356
137529 .....140, 330, 332
137721 .....124, 128, 134
137754 356
137825 .....128, 134
137980 .....136, 328, 332
139003 100
140225 506
140250 132
141220 306
142777 416
143107 98
144531 .....306, 352
144724 304
145249 .....34, 36
145840 .....28, 30, 32
148798 42
150891 416
151691 430
151793 430
151941 554
151942 554
152009 350
152193 54
152274 392
152395 470
152439 .....40, 42, 112, 114, 118, 120, 440, 574
152520 .....56, 108, 110, 462
152602 ..... 98, 284
152655 .....4, 22, 50, 160, 310, 316, 330, 334, 360, 392, 400, 438, 470, 482, 512, 518, 536, 540, 542, 552, 560, 584, 592
152668 ..... 8, 124, 130, 134, 162, 186, 190, 202, 222, 224, 228, 248, 252, 294, 308, 388, 446, 542, 560, 562, 592
152670 388
152702 .....304, 350
152730 ..... 34, 122, 124, 130, 132, 134, 432, 474, 508, 514, 522, 554, 556, 564, 578
152731 .....326, 392, 400, 406, 522, 564
152732 ..... 34, 102, 104, 106, 108, 110, 316, 380, 382
152779 .....304, 316, 392
153151 .....524, 566, 580
156178 .....102, 104, 106

156501 444
156696 390
156741 444
156743 ..... 432, 446
156783 532
156948 ..... 522, 564
158080 514
158174 ..... 166, 390, 474
159020 466
162116 ..... 534, 538
163598 ..... 510, 516, 552, 560
164061 ..... 124, 128, 132, 134
164213 ..... 124, 128, 132, 134
164214 ..... 124, 128, 132, 134
164215 122
164216 122
165168 162
165218 260
165524 ..... 16, 18, 20, 260, 304
165588 162
165735 ..... 34, 36
166450 590
167307 ..... 526, 568, 580
170851 ..... 188, 196, 198, 208
172259 36
172340 ..... 374, 378
172558 432
173117 ..... 542, 592
174131 506
174304 ..... 98, 374, 378
174418 54
174436 260
174849 ..... 136, 328, 332, 346, 348
174879 ..... 108, 110
181475 362
181649 430
182181 ..... 550, 558
182182 ..... 550, 558
183506 426
183508 ..... 426, 430
184303 ..... 182, 184, 186, 188, 190, 196, 198, 202, 206, 208
184460 ..... 550, 558
184461 ..... 168, 172, 174, 178, 182, 184, 374, 378, 476, 482, 518
184462 ..... 530, 550, 558
184463 ..... 394, 472, 476, 482, 488, 490, 530, 534, 538, 550, 558
184524 ..... 552, 560
184584 ..... 356, 358
184587 408
184597 ..... 138, 330, 334
184603 ..... 550, 558
184642 ..... 252, 294
184643 308
184644 ..... 186, 190, 202, 222, 224, 228, 560
184646 ..... 54, 304, 308
184648 466
184649 4
184652 ..... 324, 366, 372, 466, 536, 540
184656 ..... 188, 194, 204, 218, 290, 292, 316
184657 ..... 8, 452, 456, 482, 508, 514, 522, 528, 532, 548, 554, 564, 578
184659 446
184661 ..... 4, 14, 36, 376, 380, 388
184662 ..... 36, 162, 288, 290, 292, 416, 422, 426, 440, 446, 508, 578
184663 98
184664 ..... 284, 288, 326, 446
184665 ..... 4, 22, 316, 376, 380, 392, 400
184667 ..... 4, 28, 30, 126, 130, 308, 362, 370, 508, 522, 528, 554, 556, 564, 578
184669 ..... 98, 130, 448, 452, 456, 532, 548
184672 308
184673 ..... 98, 316
184675 ..... 424, 532
184677 ..... 56, 284
184679 308
184681 54
184683 ..... 60, 62, 64, 248
184685 ..... 54, 250
184688 ..... 60, 62, 64
184692 ..... 162, 170, 172, 176, 180, 186, 188, 192, 194, 196, 200, 202, 204, 210
184694 ..... 2, 44, 46, 48, 464
184695 316
184696 ..... 14, 98, 338, 388
184697 ..... 138, 326, 330, 332
184699 406
184701 248
184703 ..... 542, 592
184705 ..... 54, 60, 62, 64, 250, 502
184706 ..... 26, 292, 390, 588
184708 ..... 58, 64, 124, 130, 304, 388
184709 ..... 44, 54, 290, 292, 308, 316, 366, 372, 452, 456, 466, 586
184711 ..... 24, 34, 36, 56, 162, 250, 252, 392, 400, 404, 464, 466, 512, 518, 534, 538, 550, 552, 558, 560
184712 ..... 4, 376, 380, 446
184714 ..... 66, 68, 70, 72, 130, 134, 316, 392, 400, 470, 474, 480, 508, 514, 522, 528, 532, 548, 554, 556, 564, 578
184717 ..... 108, 110, 112, 114, 118, 120, 288, 308, 364, 370, 406, 514, 522, 554, 556, 564, 596
184718 ..... 2, 22
184721 182
184977 52
187018 510
187031 510
187137 ..... 436, 438, 572

187252 402
187428 ..... 426, 430
187477 414
187518 432
187660 468
187967 402
188470 ..... 284, 288
190752 466
190866 ..... 534, 538
191353 ..... 124, 128
191489 ..... 8, 28, 30, 32, 38, 40, 42, 122, 376, 380
191704 ..... 550, 558
191705 ..... 550, 558
193187 306
193240 300
193241 300
193242 300
193243 300
194033 402
194082 390
194521 416
197122 430
197135 ..... 124, 130, 290, 292
197171 ..... 28, 30, 32, 388, 440, 464, 466, 530, 574, 586
197229 250
197230 ..... 248, 252, 292
197263 ..... 424, 436, 438, 520, 546, 570, 572, 584
197275 34
197319 446
197320 ..... 304, 390
206340 250
209045 ..... 394, 482
210661 302
210690 300
210918 304
210985 ..... 300, 354
212250 444
213084 ..... 436, 438, 520, 546, 570, 572, 584
213110 430
213112 430
213363 468
213418 458
213419 458
213420 430
213459 ..... 500, 502
213523 596
213525 596
213546 426
213552 426
213554 426
213561 596
213562 596
213567 596
213568 596
213573 596
213574 596
213579 596
213580 596
213608 424
213633 466
213634 466
213635 466
213649 426
213654 426
213656 424
213657 424
213659 426
213660 424
213679 426
213713 ..... 452, 456
213731 426
213733 426
213743 482
213750 426
213801 426
213802 426
213824 ..... 536, 542
213851 ..... 426, 430
213857 430
213859 426
220084 260
220107 8
220317 430
220766 416
220807 276
220814 276
220817 272
220824 272
220831 274
220832 274
220834 274
220835 276
220836 272
220908 482
220939 ..... 136, 328, 332
220941 ..... 136, 328, 332, 356
220951 486
220959 ..... 550, 558
220960 486
220961 486
220963 486
220965 486
226280 ..... 66, 68, 70, 72, 296, 346, 348
226295 ..... 66, 68, 70, 72, 342, 344, 346, 348
226400 98
226861 ..... 68, 72
226926 98
226927 98
226941 ..... 74, 78, 82, 88, 92, 96
226983 ..... 74, 78, 82, 88, 92, 96

227656 34
227747 34
227914 ..... 34, 36
228292 ..... 124, 128, 132, 134
228299 ..... 124, 128
228301 ..... 124, 128, 134
228302 132
228316 ..... 140, 330, 332
228319 ..... 136, 328, 332
228322 122
228338 ..... 108, 110
228381 ..... 112, 114, 116, 118, 120
228382 ..... 128, 134
228384 ..... 128, 134
228385 ..... 128, 134
228460 ..... 124, 128
228470 ..... 254, 256, 258
228471 ..... 254, 256
228473 ..... 254, 256, 258
228477 ..... 124, 128
228478 ..... 124, 128
228479 ..... 124, 128
228485 ..... 124, 128
228604 ..... 124, 128
228611 ..... 124, 128
228614 124
228619 128
228848 128
229064 56
229340 52
230968 ..... 306, 352
231368 458
231448 434
231765 466
232219 ..... 182, 184
232233 ..... 174, 178, 182, 184, 216, 218
232395 ..... 182, 184, 186, 188, 190, 196, 198, 202, 206, 208
232397 ..... 174, 178, 182, 184, 216, 218
232405 ..... 216, 218
232676 248
232762 338
232806 162
233371 ..... 374, 378
233443 ..... 376, 380
233445 ..... 376, 380
233446 ..... 376, 380
233447 ..... 376, 380
233450 ..... 374, 378
233513 ..... 374, 378
233514 ..... 376, 380
233516 380
233519 374
233552 378
233621 ..... 376, 380
233622 ..... 376, 380
233623 ..... 376, 380
233625 ..... 376, 380
233635 340
233654 376
233655 376
233656 376
233657 376
233658 376
233659 376
233660 376
233661 376
233662 378
233663 380
233664 378
233665 380
233668 380
233669 380
233705 ..... 376, 380
233706 ..... 376, 380
233724 ..... 374, 378
233725 ..... 374, 378
233736 374
233738 374
233740 378
233741 378
233745 260
233748 296
233770 296
233799 340
233800 340
233841 314
233870 282
233874 282
233891 ..... 290, 292
233900 ..... 290, 292
233906 ..... 290, 292
233912 246
233913 246
233914 246
233920 284
233950 ..... 290, 292
233964 ..... 290, 292
233975 284
237316 532
237363 ..... 522, 564
240010 466
240013 466
240254 466
240264 466
245093 ..... 262, 266, 268
245158 ..... 374, 378
245160 486
245246 532
245316 ..... 462, 472, 476

245428 270
245432 270
245433 270
245753 ..... 474, 480
245966 434
247222 302
248117 424
248144 430
248145 424
248261 444
248285 426
248348 434
248349 434
248388 430
248538 424
248643 ..... 248, 250
248833 466
248914 466
248960 ..... 510, 550, 558
251879 248
251881 248
252002 ..... 176, 180, 216
252051 ..... 390, 466, 588
252176 162
252179 ..... 364, 372
252187 ..... 428, 430
252188 ..... 428, 430
252208 ..... 402, 492, 494
252236 388
252272 ..... 304, 354, 462
252284 22
252288 430
252291 ..... 390, 466, 588
252292 388
252303 2
252307 ..... 168, 172, 374, 378
252351 396
252398 388
252421 ..... 290, 292
252423 100
252462 ..... 392, 400
252533 406
252541 ..... 14, 428, 430
252554 ..... 402, 478
252564 446
252581 ..... 6, 102, 106, 108
252621 ..... 374, 378
252638 426
252639 ..... 134, 432
252640 404
252641 480
252650 510
252655 316
252662 482
252687 ..... 138, 158, 330, 332, 346, 348
252691 ..... 426, 430
252692 468
252693 ..... 534, 538
252694 ..... 524, 566, 580
252701 426
252703 ..... 424, 436, 438, 520, 546, 570, 572, 584
252794 ..... 194, 196, 198, 206, 210
252795 ..... 164, 194, 206, 232, 234
252807 ..... 452, 456
252814 ..... 394, 474, 480
252839 58
252902 ..... 164, 182, 184
252958 300
254183 468
255461 ..... 186, 190, 202, 208
255930 32
257054 100
257089 100
258041 52
258298 52
258318 ..... 452, 456
258326 350
258343 350
258346 52
258373 54
258383 2
258384 52
258391 ..... 54, 282, 286, 314
258399 52
258454 360
258458 360
258481 52
258582 52
258585 52
258586 54
258601 54
258622 52
258627 52
258637 2
258703 ..... 452, 456
258732 350
258740 52
258757 52
258758 56
258761 52
258791 54
258792 260
258815 52
258817 52
258822 52
258823 52
258829 52
258831 52
258835 2
258837 58

258843 2
258846 54
258849 52
258850 52
258876 ..... 346, 348, 452, 456
258893 64
258901 52
258932 64
258940 52
258953 52
258963 52
258969 52
258980 54
258986 52
258989 54
258990 54
258997 60
258998 60
266277 2
273032 ..... 254, 256, 258
273052 ..... 356, 358
273078 ..... 124, 128
273122 ..... 112, 114, 116, 118, 120
273138 ..... 112, 114, 118, 120
273258 ..... 124, 128
273259 ..... 124, 128
273278 ..... 112, 118, 120
273281 ..... 114, 116
273283 ..... 112, 118
273284 ..... 114, 116, 120, 122
273285 ..... 216, 218
273304 ..... 112, 114, 116, 118, 120
273309 122
273347 ..... 140, 328, 332
273373 140
273375 ..... 142, 144, 146
273376 140
273440 260
273451 336
273452 336
273453 336
273523 ..... 142, 144, 146, 328, 332
273524 ..... 140, 328, 332, 362, 370
273536 ..... 140, 328, 332
273576 130
273594 336
273615 326
273637 ..... 116, 122
273653 ..... 108, 110
273666 ..... 140, 142, 144, 146
273680 ..... 102, 104, 106
273689 336
273758 ..... 124, 128
273759 132
273760 134
273770 134
273772 122
273777 ..... 112, 114, 116, 118, 120, 122, 362
273787 110
273788 108
273789 108
273790 ..... 102, 104
273791 106
273795 ..... 102, 104, 106
273813 ..... 154, 328
273823 154
273831 ..... 112, 114, 116, 118, 120, 122, 350
273860 ..... 102, 104, 106
273861 ..... 112, 114, 116, 118, 120
273875 ..... 124, 128
273877 136
273907 ..... 124, 128, 336
273926 ..... 124, 128, 132, 134
273963 ..... 124, 128, 336
273968 ..... 158, 328, 332
275199 40
275200 40
275211 34
275232 ..... 34, 36
275265 40
275266 40
275286 ..... 30, 32
275287 ..... 30, 32
275319 ..... 30, 32
275320 ..... 30, 32
275324 34
275332 36
275348 34
275375 34
275404 28
275405 28
275460 30
275461 30
275483 30
275484 30
275504 40
275505 40
275513 40
275514 40
275521 ..... 374, 378
275524 374
275530 374
275532 374
275533 374
275542 ..... 374, 378
275543 ..... 374, 378
275563 ..... 28, 30
275614 374
275623 ..... 28, 30
275624 378

275625 378
275640 42
275641 42
275675 32
275676 32
275688 42
275690 42
275691 380
275692 378
275770 42
275779 42
275837 30
275860 36
275864 ..... 36, 346, 348
275877 34
275879 34
275902 34
275954 42
275960 42
275965 32
276062 ..... 452, 456
276117 ..... 452, 456
276140 426
276180 426
276183 430
276206 426
276326 506
276631 482
276770 ..... 452, 456, 586
276790 396
276839 ..... 346, 348, 424
276899 596
276900 596
279011 ..... 510, 516
279012 ..... 510, 516
279034 ..... 510, 516
279035 ..... 510, 516
279085 260
279228 ..... 534, 538, 550, 558
279528 260
279737 510
283002 98
283008 382
283012 226
283014 224
283015 226
283016 224
283017 224
283018 224
283035 ..... 174, 216
283036 ..... 174, 216
283037 182
283038 182
283039 182
283046 168
283047 168
283048 168
283049 230
283050 230
283051 212
283052 212
283053 190
283055 190
283056 190
283057 ..... 186, 190, 202, 208
283058 ..... 186, 190, 202, 208
283059 ..... 186, 188, 190, 196, 198, 202, 208
283060 186
283061 ..... 374, 378
283062 ..... 374, 378
283063 ..... 168, 172, 174, 178
283065 ..... 168, 172
283066 382
283068 ..... 174, 178
283069 ..... 174, 178
283070 ..... 174, 178, 216
283074 ..... 196, 198
283075 ..... 196, 198
283077 ..... 374, 378
283078 196
283079 196
283080 196
283081 230
283082 232
283091 ..... 182, 216, 218
283092 ..... 216, 218
283096 ..... 188, 196, 198, 208, 220, 224, 226
283097 230
283098 182
283099 182
283102 168
283104 168
283108 182
283109 182
283141 190
283143 190
283144 190
283145 196
283146 196
283147 196
283159 230
283160 230
283161 230
283162 232
283164 212
283172 172
283173 172
283174 172
283175 178
283176 178

283180 190
283182 190
283183 190
283184 198
283185 198
283186 198
283190 234
283191 234
283192 234
283193 234
283194 230
283195 232
283199 212
283200 212
283201 168
283202 ..... 168, 172, 174, 178
283203 174
283204 174
283205 212
283215 ..... 536, 542, 592
283231 168
283232 168
283233 168
283246 186
283247 186
283248 186
283249 186
283251 188
283327 188
283378 ..... 174, 178, 216
283409 168
283410 168
283411 168
283412 ..... 174, 178
283413 ..... 174, 178
283417 ..... 190, 202
283419 ..... 190, 202
283420 ..... 190, 202
283421 ..... 174, 178
283422 ..... 174, 178
283426 174
283427 174
283428 ..... 198, 208
283429 ..... 198, 208
283430 ..... 198, 208
283431 ..... 198, 208
283432 ..... 198, 208
283433 ..... 198, 208
283434 230
283435 230
283436 230
283437 232
283438 ..... 232, 234
283439 ..... 232, 234
283440 178
283441 178
283442 178
283443 178
283447 202
283449 202
283450 202
283451 208
283452 208
283453 208
283456 168
283457 168
283458 168
283459 230
283460 230
283461 212
283462 212
283463 172
283464 172
283465 172
283466 234
283467 234
283468 212
283469 212
283470 212
283471 212
283500 ..... 164, 166
283502 ..... 164, 166
283507 ..... 208, 226
283508 184
283509 184
283555 ..... 374, 378
283560 ..... 230, 234
283561 184
283562 184
283563 184
283564 184
283565 184
283566 184
283567 166
283569 166
283571 ..... 374, 378
283579 382
283773 ..... 220, 224, 226
283776 226
283777 226
283783 286
283785 ..... 194, 204, 206
283786 204
283791 ..... 186, 190, 202, 208
283797 ..... 170, 172, 174, 178, 186, 190, 202
283807 ..... 170, 172, 174, 178, 186, 190, 202
283818 ..... 188, 196, 198, 208
283820 ..... 188, 196, 198, 208
283822 202
283823 202

283824 202
283830 226
283831 226
283832 226
283833 226
283836 226
283837 226
283838 226
283839 226
283849 ..... 60, 62, 64, 236, 238, 240
283889 ..... 194, 206
283906 ..... 188, 196, 198, 208
283907 ..... 188, 196, 198, 208
283909 ..... 188, 194, 204
283910 ..... 188, 194, 204
283984 ..... 170, 172, 174, 178
283987 ..... 188, 194, 204, 218
283988 ..... 188, 194, 204, 218
283989 ..... 188, 194, 204, 218
284215 302
284548 302
284549 306
284550 308
284705 ..... 282, 286
284706 ..... 282, 288
284707 ..... 284, 288
284708 ..... 284, 288
284709 ..... 284, 288
284710 ..... 284, 288
284900 504
284946 ..... 524, 566
284971 ..... 522, 564
284975 590
284976 ..... 522, 564
286087 98
286089 ..... 98, 100
286257 ..... 66, 68, 70, 72, 346, 348
286315 ..... 66, 68, 342, 346, 348
286316 ..... 66, 68, 342, 346, 348
286317 ..... 68, 320, 348
286318 ..... 66, 70, 72, 318, 344, 346
286319 ..... 66, 68, 70, 72, 318, 320, 344, 346, 348
286320 72
286321 ..... 318, 320
286322 ..... 318, 320
286323 ..... 318, 320
286329 ..... 66, 68, 346, 348
286330 ..... 70, 72, 344
286331 ..... 66, 68, 70, 72, 344, 346, 348
286332 ..... 68, 320, 348
286333 72
286362 ..... 82, 88, 92, 96
286363 ..... 82, 88, 92, 96
286440 ..... 74, 78, 82, 88, 92, 96
286445 100
286461 ..... 74, 78, 82, 86, 90, 94, 342, 344, 346, 348
286462 ..... 74, 78, 82, 86, 90, 94
286463 ..... 82, 86, 90, 94
286464 ..... 82, 86, 92, 96
286465 ..... 82, 86, 90, 94
286466 ..... 82, 86, 92, 96
286475 ..... 74, 78, 82, 88, 92, 96, 342, 344, 346, 348
286476 ..... 74, 78, 82, 88, 92, 96, 342, 344, 346, 348
286477 ..... 74, 78, 82, 88, 92, 96, 342, 344, 346, 348
286478 ..... 74, 78, 84, 88, 92, 96
286479 ..... 26, 74, 78, 84, 88, 92, 96, 346, 348
286481 ..... 74, 78, 82, 88, 92, 96, 346, 348
286483 100
286485 100
286486 100
286488 100
286489 100
286490 100
286493 ..... 74, 78, 82, 86, 90, 94
286502 8
286503 8
286562 ..... 74, 76, 80, 86, 90, 94
286563 ..... 80, 86, 90, 94
286564 ..... 74, 76, 90, 94
286565 ..... 76, 80, 86, 90
286566 ..... 74, 78
286567 78
286574 82
286575 ..... 82, 90
286576 86
286578 94
286579 ..... 74, 76, 80, 86, 90, 94
286580 ..... 80, 86, 90, 94
286581 ..... 74, 76, 90, 94
286582 ..... 76, 80, 86, 90
286583 ..... 74, 78
286584 78
286591 82
286592 ..... 82, 90
286593 86
286595 94
286597 74
286598 76
286599 76
286600 76
286609 74
286610 76
286611 76
286612 76
286616 80
286617 80
286618 86
286619 90
286620 94
286621 ..... 74, 78, 84, 88, 92, 96

286627 ..... 74, 78, 82, 86, 90, 94
286628 ..... 82, 86, 90, 94
286629 ..... 82, 86, 92, 96
286663 68
286664 68
286665 68
286666 68
286667 68
286668 66
286669 66
286670 66
286671 66
286673 72
286674 72
286675 72
286676 72
286677 72
286678 72
286679 70
286680 70
286681 70
286682 70
286683 320
286684 320
286685 320
286686 320
286687 320
286688 320
286689 320
286690 318
286691 318
286692 318
286693 318
286703 98
286705 ..... 66, 68, 70, 72
286725 8
286741 8
286758 ..... 74, 76, 80, 86, 90, 94
286759 ..... 80, 86, 90, 94
286760 ..... 74, 76, 90, 94
286761 ..... 76, 80, 86
286763 ..... 74, 78
286764 78
286767 82
286768 ..... 82, 90
286769 86
286770 94
286779 74
286780 76
286781 76
286782 76
286787 80
286788 80
286789 86
286790 90
286791 94
286826 98
286861 ..... 82, 88, 92, 96, 348
286862 ..... 82, 88, 92, 96
286863 ..... 82, 88, 92, 96
286865 80
286866 ..... 80, 86
286867 90
286868 94
286870 80
286871 ..... 80, 86
286872 90
286873 94
286875 80
286876 ..... 80, 86
286877 90
286878 94
286886 80
286887 80
286888 86
286889 90
286890 94
287031 584
287032 584
287193 486
287449 ..... 286, 468
287450 ..... 286, 468
287451 468
287456 ..... 534, 538
287460 ..... 534, 538
287461 ..... 534, 538
287462 ..... 534, 538
287466 486
287467 486
287468 486
287469 486
287470 486
287471 486
287472 486
287473 486
287613 486
287701 300
287702 ..... 482, 506
287705 506
287771 ..... 482, 486
287859 500
287878 510
287887 ..... 436, 438, 584
287888 ..... 436, 438, 584
287889 ..... 438, 572, 584
287890 ..... 438, 572, 584
287939 466
288195 260
288438 2
289220 4

289235 12
289261 4
289341 4
289346 50
289347 50
289349 4
289356 50
289357 50
289358 4
289359 12
289375 22
289380 22
289439 22
289483 22
289487 22
289519 22
289520 22
289618 22
289621 22
289654 14
289742 4
289759 162
289762 260
289763 260
289869 162
289880 ..... 102, 104, 106
289924 22
289925 22
291484 248
291485 248
292692 ..... 300, 354
293053 ..... 390, 452, 456, 586, 588
293054 ..... 390, 588
294098 510
294394 516
295140 402
295211 466
295212 466
295213 466
295261 ..... 452, 456
295407 462
295766 462
295770 462
295853 ..... 462, 472, 476
295927 ..... 470, 490, 494
295929 ..... 194, 204
295992 ..... 452, 456
301034 586
301047 586
301049 586
301065 586
301126 ..... 452, 456
301127 ..... 452, 456
301318 468
301427 ..... 426, 430, 442
301441 430
301451 514
301513 444
301629 ..... 508, 514, 522, 528, 532, 548, 554, 556, 564, 578
301633 444
301805 434
301806 434
301807 434
301971 408
301992 430
301993 430
301994 426
302030 516
302204 ..... 260, 304, 506
303021 302
303033 302
303169 306
303251 ..... 304, 354
303283 304
303341 304
303379 300
303380 302
303486 300
303491 300
303492 ..... 300, 354
303520 354
303525 ..... 300, 354
303691 300
303693 300
303766 300
303832 302
303839 ..... 300, 354
303898 302
303961 300
304040 ..... 452, 456
304371 498
304494 436
304514 426
304520 426
304521 430
304611 382
304658 390
304668 390
304669 532
304931 430
308056 426
308249 510
308251 510
308252 510
308253 ..... 510, 516
308254 ..... 510, 516
308255 ..... 510, 516
308536 424
308538 426

308648 ..... 426, 430
308658 468
308725 ..... 392, 408
308726 ..... 392, 400, 412
308732 ..... 392, 400
308740 ..... 392, 400
308755 ..... 392, 400
308774 458
308848 412
308850 426
308852 412
308853 412
308855 412
308856 412
308859 426
308863 ..... 392, 400, 412
308878 450
308879 450
308941 502
308942 502
308943 594
311038 152
311054 356
311055 356
311068 356
311069 356
311190 136
311193 136
311195 150
311207 136
311210 ..... 136, 328
311233 ..... 170, 172, 174, 178, 186, 190, 202
311237 ..... 112, 114, 118, 120
311238 ..... 112, 114, 118, 120
311284 110
311285 ..... 102, 104
311303 136
311306 ..... 136, 328
311318 250
311321 ..... 356, 358
311322 ..... 356, 358
311325 ..... 136, 328, 332
311327 ..... 136, 328, 332
311347 ..... 328, 332
311354 ..... 188, 194, 204
311359 ..... 116, 122
311360 ..... 188, 196, 198, 208
311365 ..... 136, 328, 332
311368 ..... 136, 332
311405 136
311408 136
311451 ..... 188, 196, 198, 208
311461 ..... 188, 194, 204
311462 ..... 188, 196, 198, 208
311464 298
311493 260
311523 ..... 136, 328, 332, 346, 348
311524 158
311611 ..... 102, 106, 108
311612 ..... 102, 106
311613 ..... 102, 106, 108
311615 ..... 140, 328, 332
311617 ..... 140, 328, 332
311620 ..... 124, 128
311627 ..... 102, 106
311632 122
311643 ..... 150, 152
311644 ..... 150, 152
311645 ..... 150, 152
311646 ..... 150, 152
311647 150
311648 150
311658 150
311672 ..... 140, 328, 332
311675 136
311676 136
311694 156
311695 160
311724 134
311729 ..... 156, 328, 332
311745 136
311746 136
311752 ..... 156, 328
311753 ..... 160, 328
311789 342
311790 344
311795 158
311822 ..... 158, 328
311863 332
311864 332
311868 332
311870 332
311882 336
311906 ..... 154, 328, 332
311949 110
311959 358
311964 ..... 154, 156, 328, 332
311965 ..... 160, 328, 332
311972 358
312134 ..... 220, 224, 228
312654 ..... 170, 172, 174, 180, 186, 188, 190, 196, 198, 202, 208
312655 ..... 188, 194, 196, 198, 204, 208
312673 324
312675 162
312680 162
312704 2
312706 590
312777 162
313007 286

313011 282
313012 282
313020 282
313035 ..... 156, 160
313064 246
313114 ..... 282, 286
313192 246
313303 ..... 22, 310
313304 ..... 22, 310
313366 ..... 282, 286
313368 ..... 282, 286
313374 324
313406 300
313421 262
313422 262
313425 300
313432 ..... 22, 310
313441 284
313461 314
313496 ..... 220, 224, 228
313497 ..... 220, 224, 228
313499 ..... 220, 224, 226
313500 ..... 220, 224, 226
313501 ..... 382, 386
313502 ..... 382, 386
313510 260
313511 ..... 220, 224, 226
313523 220
313524 220
313525 220
313526 220
313529 226
313530 226
313541 262
313542 262
313543 262
313544 262
313545 262
313546 262
313547 262
313548 262
313549 262
313550 262
313551 262
313552 262
313554 262
313555 262
313556 226
313557 226
313566 298
313574 262
313575 262
313580 262
313581 262
313643 246
313705 298
313713 22
313725 260
313728 506
313729 260
313730 260
313733 260
313734 ..... 8, 468
313744 382
313745 382
313748 286
313749 382
313750 382
313753 286
313767 12
313776 286
313777 286
313780 382
313783 ..... 22, 310
313787 260
313788 382
313789 382
313790 382
313791 286
313792 286
313793 282
313794 ..... 106, 282
313797 382
313798 386
313799 386
313800 386
313801 382
313802 386
313803 386
313804 386
313805 386
313806 386
313807 386
313808 382
313809 386
313810 386
313811 386
313812 386
313813 386
313814 386
313815 386
313816 386
313817 386
313818 386
313819 386
313820 386
313821 386
313822 386
313824 386
313825 386

313826 386
313827 386
313828 386
313829 386
313830 386
313831 386
313832 388
313833 386
313834 386
313835 386
313836 386
313837 386
313838 386
313839 388
313841 386
313843 388
313844 388
313845 388
313846 388
313847 388
313848 388
313849 388
313859 ..... 282, 286
313869 386
313881 ..... 260, 388
313882 386
313883 386
313884 386
313914 282
313920 260
313921 282
313922 282
313940 246
313964 ..... 112, 114, 116, 118, 120, 122
313965 162
314062 424
314076 ..... 500, 502
314082 408
314136 ..... 426, 430
314169 ..... 426, 430
314173 416
314174 416
314276 444
314292 468
314389 ..... 474, 480
314391 488
314392 488
314394 488
314395 472
314396 472
314397 468
314399 468
314401 488
314402 474
314416 468
314417 468
314537 474
314581 ..... 284, 322
314585 ..... 524, 566, 580
314586 ..... 524, 566, 580
314587 ..... 524, 566, 580
314588 ..... 524, 566, 580
314591 490
314592 490
314593 490
314594 490
314595 490
314605 ..... 490, 494
314606 ..... 490, 494
314645 468
314657 422
314678 514
314680 ..... 440, 574
314697 ..... 490, 494
314706 ..... 550, 558
314707 ..... 550, 558
314708 ..... 550, 558
314817 ..... 534, 538
314819 ..... 534, 538
314820 ..... 534, 538
314821 ..... 534, 538
316044 302
316095 ..... 300, 352
316096 ..... 300, 352
316110 300
316118 300
316119 300
316284 ..... 300, 352
316293 302
316330 ..... 302, 352
316358 300
316639 ..... 260, 304
316649 ..... 260, 304
316662 ..... 260, 354
316793 ..... 302, 352
316794 300
316847 ..... 302, 352
316848 ..... 302, 352
316851 ..... 302, 352
316859 ..... 304, 354
316860 ..... 304, 354
319051 34
319095 ..... 26, 346, 348
319098 26
319099 26
319100 26
319101 26
319102 26
319103 26
319104 26

319105 ..... 26, 346, 348
319180 ..... 44, 46, 48
319191 36
319222 ..... 28, 30, 32
319223 ..... 28, 30, 32
319225 ..... 38, 40, 42
319228 40
319229 ..... 44, 46, 48
319230 ..... 46, 48
319231 ..... 44, 46, 48
319265 36
319287 42
319345 26
319346 26
319347 26
319366 ..... 28, 30, 32
319376 40
319377 ..... 40, 42
319378 ..... 40, 42
319394 ..... 28, 30
319403 32
319404 32
319474 54
319508 52
319509 52
319540 26
319542 54
319548 64
319549 64
319550 64
319563 64
319564 64
319583 36
319587 38
319588 38
319662 26
319707 34
319708 34
319878 284
320011 ..... 304, 354
320026 ..... 6, 98
320039 308
320060 ..... 304, 354
320089 98
320108 54
320109 54
320110 54
320122 284
320148 ..... 26, 60, 62, 64
320154 304
320160 54
320161 56
320167 ..... 34, 56
320168 ..... 102, 106, 108
320169 2
320171 2
320175 ..... 140, 330, 332
320176 ..... 308, 452, 456
320179 140
320180 ..... 124, 130, 132, 134, 140, 142, 144, 146, 154, 156, 330, 332, 414
320181 ..... 28, 30, 32
320182 36
320187 ..... 138, 330, 332
320190 ..... 30, 32, 44, 46, 48, 58, 60, 62, 64, 316, 364
320192 ..... 138, 330, 332, 336
320195 ..... 534, 538
320196 ..... 102, 104, 106
320199 56
320205 ..... 302, 306, 362
320206 ..... 34, 36
320207 ..... 112, 114, 116, 118, 120, 122
320208 ..... 308, 522, 564
320213 306
320214 98
320215 98
320218 ..... 12, 290, 292
320219 308
320220 ..... 316, 382
320236 54
320246 ..... 60, 62, 64
320248 246
320251 56
320259 442
320274 182
320284 ..... 534, 538, 550, 558
320290 ..... 28, 30, 32, 38, 40, 42
320304 4
320311 98
320327 22
320331 288
320336 ..... 60, 62, 64, 236, 238, 240
320358 ..... 458, 464
320360 ..... 342, 344, 346, 348, 392, 482
320388 390
320389 446
320390 ..... 252, 292, 446
320392 558
320397 390
320404 316
320409 ..... 252, 292
320410 ..... 252, 292
320441 ..... 362, 370
320448 ..... 44, 46, 48, 60, 62, 64, 236, 238, 240
320486 54
320500 444
320559 400
322022 468
322046 444
322114 416

322142 396
322148 ..... 394, 396, 398
322149 398
322157 398
322158 398
322160 396
322161 396
322192 408
322193 408
322195 408
322197 408
322216 ..... 550, 558
322219 444
322256 488
322372 424
322377 430
322383 ..... 496, 498, 542
322386 510
322387 552
322397 424
322409 408
322456 416
322486 416
322555 460
322557 444
322561 ..... 392, 400
322668 450
322676 ..... 452, 456
322695 530
322750 586
322770 424
322870 390
322872 390
322914 ..... 434, 588
322915 416
322916 416
322917 416
322918 416
322924 416
322925 416
322926 416
322930 416
322931 416
322961 442
322962 442
322970 ..... 108, 434
322981 444
322996 418
322997 418
322998 418
323003 ..... 232, 234
323023 ..... 188, 194, 204
323032 ..... 60, 62, 64
323049 302
323051 ..... 60, 62, 64
323082 58
323083 58
323086 58
323087 58
323130 ..... 242, 244
323145 ..... 242, 244
323157 62
323158 62
323164 ..... 236, 238, 240
323165 240
323166 ..... 238, 240
323169 ..... 238, 240
323172 ..... 238, 240
323207 244
323208 244
323209 244
323210 244
323211 244
323212 244
323343 188
323344 188
323345 188
323346 216
323347 216
323348 216
323349 216
323350 220
323351 220
323352 220
323353 220
323355 212
323356 188
323361 224
323362 224
323381 242
323383 530
323384 530
323385 530
323386 530
323387 530
323428 ..... 216, 218
323429 ..... 216, 218
323499 292
323516 260
323519 216
323659 194
323660 194
323661 194
323662 218
323663 194
323664 206
323665 204
323666 204
323667 218
323668 206

323669 206
323670 204
323671 206
323672 206
323673 204
323674 206
323687 108
323688 108
323694 292
323698 ..... 496, 498, 562
323718 244
323772 ..... 236, 238, 240
323773 ..... 60, 62, 64, 236
323795 ..... 236, 238, 240
323808 218
323826 230
323827 230
323828 232
323829 230
323936 ..... 536, 542
323937 250
323940 502
323994 282
323995 282
323996 482
323998 400
327086 ..... 260, 304, 354
327089 ..... 302, 352
327179 300
327255 300
327294 306
327304 306
327428 300
327429 300
327532 306
327534 302
327535 302
327561 300
327563 306
327588 308
327600 ..... 304, 352
327649 306
327655 352
327656 352
327659 308
327664 308
327672 302
327680 308
327682 352
327692 308
327694 306
327695 306
327696 306
327704 300
327710 304
327716 302
327717 ..... 260, 306, 352
327738 304
327739 306
327740 306
327745 302
327749 302
327751 302
327755 300
327756 300
327771 306
327786 302
327798 ..... 302, 352
327802 ..... 260, 306, 352
327807 ..... 306, 352
327808 ..... 306, 352
327817 308
328002 ..... 550, 558
328065 ..... 542, 592
328085 ..... 440, 574
328089 ..... 496, 498
328120 412
328128 462
328133 444
328142 506
328143 462
328152 ..... 408, 412
328154 ..... 408, 412
328156 ..... 410, 414
328157 408
328158 410
328159 410
328160 408
328161 408
328162 408
328164 408
328165 408
328174 408
328175 408
328176 ..... 408, 412
328178 396
328181 408
328183 414
328184 410
328185 408
328186 408
328187 408
328188 408
328196 414
328197 412
328198 412
328199 412
328200 412
328201 412
328202 412

328203 412
328261 396
328262 ..... 394, 398
328269 396
328283 396
328288 396
328290 396
328291 396
328292 396
328293 396
328306 396
328307 396
328308 396
328309 396
328310 396
328311 396
328312 396
328313 396
328318 ..... 496, 498
328329 ..... 254, 256, 258
328348 ..... 452, 456, 586
328349 ..... 452, 456, 586
328370 ..... 392, 400
328411 ..... 496, 542
328420 424
328491 444
328534 250
328538 444
328539 250
328547 250
328548 ..... 534, 538
328549 500
328550 500
328553 502
328554 502
328555 502
328556 250
328560 ..... 496, 498
328562 506
328565 506
328582 532
328662 ..... 254, 256, 258
328713 ..... 392, 400
328756 440
328758 440
328760 440
328763 440
328872 510
328874 ..... 524, 566, 580
328887 516
328908 516
328913 ..... 542, 592
328924 416
328968 516
330622 54
335008 516
335133 ..... 490, 494
335144 444
335160 576
335301 ..... 14, 314
335342 ..... 550, 558
335431 ..... 536, 542
335563 322
335564 322
335663 530
335849 532
335851 52
335887 ..... 488, 492
335891 466
335912 466
335924 ..... 140, 328, 332
335971 562
335981 462
337043 532
337117 422
337124 426
337143 ..... 436, 438, 520, 546, 570
337152 ..... 346, 348, 424, 438, 520, 546, 570
337206 424
337276 430
337284 ..... 426, 430
337352 ..... 542, 592
337362 434
337366 434
337407 ..... 452, 456
337427 398
337429 398
337430 398
337431 398
337432 398
337433 398
337440 396
337441 396
337456 ..... 452, 456
337457 ..... 452, 456
337463 ..... 452, 456
337464 ..... 452, 456
337551 560
337611 502
337619 504
337627 504
337634 444
337635 444
337636 444
337651 ..... 552, 560
337652 ..... 552, 560
337667 412
337707 418
337709 418
337711 418

337712 418
337713 ..... 392, 400, 412
337715 418
337716 418
337717 418
337718 418
337720 418
337721 418
337722 418
337723 418
337725 418
337727 418
337729 418
337730 418
337731 418
337732 418
337770 398
337773 398
337774 ..... 392, 394, 396
337777 ..... 440, 574
337778 ..... 440, 574
337779 ..... 440, 574
337780 ..... 440, 574
337804 430
337821 444
337823 398
337862 508
337863 508
337980 516
337981 516
340049 270
340050 276
340051 272
340052 274
340076 388
340077 388
340078 388
340091 326
340095 338
340096 338
340113 4
340122 4
340125 ..... 452, 456
340131 506
340132 506
340146 ..... 140, 328, 332
340164 260
340183 250
340191 ..... 108, 110
340193 4
340210 314
340212 314
340215 4
340216 128
340218 250
340224 ..... 112, 114, 116, 118, 120
340289 292
340304 262
340305 262
340492 346
340493 348
340571 116
340648 108
340672 54
340681 ..... 38, 40, 42
340683 236
340841 ..... 38, 40, 42
340897 52
340954 292
340955 ..... 252, 292
340956 ..... 252, 292
344336 586
344409 586
344412 586
344413 586
347001 ..... 392, 400, 412
347077 532
347141 ..... 522, 564
347179 548
347180 548
347185 ..... 392, 400
347301 548
347342 506
347349 408
347405 408
347410 408
347416 408
347417 408
347431 508
347480 508
347483 462
347487 462
347498 578
347500 456
347532 578
347553 462
347630 580
347665 458
347691 466
347692 466
347722 422
347731 528
347775 456
347778 456
347796 530
347923 444
347949 468
347954 ..... 534, 538
347963 452
347964 528

347965 528
347975 410
347976 410
347977 410
347978 410
347979 ..... 488, 490, 492, 494
349362 ..... 526, 568
352001 ..... 252, 292
352163 ..... 252, 292
352697 448
357012 418
357046 562
357047 562
357050 562
357051 562
357052 562
357053 562
357054 562
357064 418
357119 ..... 542, 592
357171 554
357173 ..... 390, 588
357174 ..... 390, 588
357195 ..... 508, 514, 522, 528, 532, 548, 554, 556, 564, 578
357230 462
357233 438
357234 438
357299 444
357455 444
357492 444
357512 ..... 390, 588
357567 ..... 522, 564
357606 ..... 522, 564
357776 532
357797 10
357937 396
357945 502
357989 562
360004 314
360035 108
360044 326
360045 326
360069 314
360072 314
360076 314
360077 314
360079 314
360103 314
360105 316
360106 314
360108 314
360110 314
360114 314
360119 314
360120 314
360122 314
360127 14
360134 314
360144 124
360150 40
360151 ..... 40, 42
360168 314
360175 8
360176 8
360186 124
360199 136
360201 136
360212 252
360299 ..... 60, 62, 64
360358 ..... 282, 290, 292
360361 4
360374 22
360375 22
360376 148
360378 22
360379 22
360405 268
360406 268
360407 268
360408 268
360409 268
360410 268
360411 268
360448 ..... 18, 310
360449 ..... 20, 310
360509 ..... 30, 32
360520 50
360521 50
360526 ..... 290, 292
360540 ..... 136, 328, 332, 346, 348
360541 260
360551 ..... 290, 292
360552 ..... 18, 310
360553 ..... 20, 310
360554 ..... 16, 310
360555 ..... 16, 310
360559 ..... 290, 292
360655 506
360679 356
360714 286
360716 506
360720 316
360723 314
360734 316
360748 4
360749 4
360750 4
360751 4
360754 50

360755 50
360756 444
360774 286
360784 22
360785 22
360812 286
360818 286
360823 252
360824 252
360828 252
360835 ..... 2, 56
360840 252
360847 316
360848 314
360850 316
360859 532
360862 316
360863 316
360869 312
360870 98
360871 312
360875 282
360924 466
360925 466
360927 466
360939 314
360940 314
360971 444
360987 282
360992 282
368017 446
368221 390
368225 4
368226 4
368239 252
368338 252
368380 458
368385 594
368386 268
368394 268
368398 264
368399 264
368400 264
368401 264
368402 264
368403 264
368404 264
368405 264
368406 264
368407 264
368408 264
368409 264
368410 264
368411 264
368422 264
368423 264
368424 268
368425 268
368457 462
368460 462
368631 506
368656 556
368660 556
368669 400
368673 480
368674 476
368675 476
368677 476
368678 476
368684 476
368685 476
368686 476
368689 492
368690 492
368691 492
368692 492
368699 280
368700 280
368701 280
368702 280
368703 280
368704 280
368705 280
368706 280
368707 280
368708 280
368709 280
368710 280
368711 280
368712 280
368713 280
368714 280
368715 280
368716 280
368717 280
368718 280
368719 280
368720 280
368761 ..... 400, 408
368826 556
368843 406
368845 406
368863 408
369679 476
378133 390
378236 406
378248 402
378250 494
378251 494
378252 494

378253 494
378254 494
378372 480
378373 492
378435 498
500303 ..... 252, 292, 444
500321 ..... 254, 256, 258
500448 576
500518 562
500557 594
500593 594
500605 ..... 542, 592

B

B6042 596
B6043 596
B6044 596
B6045 596
B6046 596
B6213 596
B6288 300
B6400 584
B6413 374
B6414 374
B6415 374
B6416 374
B6417 378
B6418 378
B6419 378
B6460 352
B6801 324
B7022 296
B7023 296
B7027 360
B7028 350
B7029 382
B7030 298
B7038 416
B7039 416
B7040 322
B7041 412
B7042 412
B7044 548
B7045 532
B7048 500
B7051 500
B7052 500
B7057 550
B7058 534
B7064 ..... 254, 256
B7065 ..... 254, 256
B7082 220
B7083 224
B7107 514
B7108 416
B7109 516
B7111 412
B7113 226
B7114 226
B7116 226
B7117 212
B7118 212
B7119 212
B7120 212
B7121 212
B7122 340
B7123 340
B7127 230
B7128 230
B7130 230
B7131 234
B7155 342
B7156 344
B7165 510
B7180 418
B7181 418
B7182 418
B7193 226
B7195 230
B7196 ..... 496, 498
B7217 586
B7230 326
B7231 592
B7238 338
B7241 576
B7302 ..... 362, 366
B7303 372
B7304 368
B7305 368
B7306 368
B7307 370
B7308 412
B7311 578
B7312 422
B7313 508
B7314 440
B7315 528
B7316 530
B7317 422
B7323 ..... 558, 562
B7326 418
B7338 212
B7339 230
B7340 220
B7341 554
B7342 588
B7343 438
B7344 438
B7345 438

B7346..... 314
B7347.....440, 574
B7348.....440, 574
B7350..... 292
B7357..... 328
B7358..... 328
B7359..... 328
B7362..... 332
B7365..... 346
B7366..... 348
B7391..... 306
B7392..... 306
B7395..... 370
B7396..... 370
B7398.....306, 352
B7401..... 310
B7402..... 310
B7403..... 310
B7405..... 542
B7406..... 538
B7407..... 580
B7408..... 258
B7431..... 500
B7464..... 382
B7466..... 382
B7476.....522, 564
B7480.....282, 286
B7489.....496, 498
B7490.....496, 498
B7492..... 500
B7506..... 500
B7507.....524, 566
B7533..... 556
B7542..... 590

C

C2086..... 362
C2087..... 362
C2088..... 362
C2089..... 362
C2169..... 362
C2170..... 362
C2171..... 352
C2173..... 306

MacDon

CUSTOMERS
MacDon.com

DEALERS
Portal.MacDon.com

Trademarks of products are the marks of their respective manufacturers and/or distributors.

Printed in Canada