MacDon

PW8
Pick-Up Header

Operator's Manual

214979 Revision A

Original Instruction

The harvesting specialists.

PW8 Pick-Up Header

Published May 2019

California Proposition 65 Warning

Diesel engine exhaust and some of its constituents are known to the State of California to cause cancer, birth defects, and other reproductive harm. Battery posts, terminals, and related accessories contain lead and lead components. Wash hands after handling.

Declaration of Conformity

Figure 1: EC Declaration of Conformity

CE

EC Declaration of Conformity

[1] MacDon

MacDon Industries Ltd.
680 Moray Street,
Winnipeg, Manitoba, Canada
R3J 3S3

[2] Combine Pick-Up Header

[3] MacDon PW8

[4] As per Shipping Document

[5] May 9, 2019

[6] _____
Christoph Martens
Product Integrity

EN

We, [1]

Declare, that the product:

Machine Type: [2]

Name & Model: [3]

Serial Number(s): [4]

fulfils all the relevant provisions of the Directive 2006/42/EC.

Harmonized standards used, as referred to in Article 7(2):

EN ISO 4254-1:2013
EN ISO 4254-7:2009

Place and date of declaration: [5]

Identity and signature of the person empowered to draw up the declaration: [6]

Name and address of the person authorized to compile the technical file:

Benedikt von Riedesel
General Manager, MacDon Europe GmbH
Hagenauer Straße 59
65203 Wiesbaden (Germany)
bvonriedesel@macdon.com

BG

Ние, [1]

декларираме, че следният продукт:

Тип машина: [2]

Наименование и модел: [3]

Сериен номер(а) [4]

отговаря на всички приложими разпоредби на директива 2006/42/ЕО.

Използвани са следните хармонизирани стандарти според чл. 7(2):

EN ISO 4254-1:2013
EN ISO 4254-7:2009

Място и дата на декларацията: [5]

Име и подпис на лицето, упълномощено да изготви декларацията: [6]

Име и адрес на лицето, упълномощено да състави техническия файл:

Бенедикт фон Рийдезел
Управител, MacDon Europe GmbH
Hagenauer Straße 59
65203 Wiesbaden (Германия)
bvonriedesel@macdon.com

CZ

My, [1]

Prohlašujeme, že produkt:

Typ zařízení: [2]

Název a model: [3]

Sériové(á) číslo)a): [4]

splňuje všechna relevantní ustanovení směrnice 2006/42/EC.

Byly použity harmonizované standardy, jak je uvedeno v článku 7(2):

EN ISO 4254-1:2013
EN ISO 4254-7:2009

Místo a datum prohlášení: [5]

Identita a podpis osoby oprávněné k vydání prohlášení: [6]

Jméno a adresa osoby oprávněné k vyplnění technického souboru:

Benedikt von Riedesel
generální ředitel, MacDon Europe GmbH
Hagenauer Straße 59
65203 Wiesbaden (Německo)
bvonriedesel@macdon.com

DA

Vi, [1]

erklærer, at prduktet:

Maskintype [2]

Navn og model: [3]

Serienummer (-numre): [4]

Opfylder alle bestemmelser i direktiv 2006/42/EF.

Anvendte harmoniserede standarder, som henvist til i paragraf 7(2):

EN ISO 4254-1:2013
EN ISO 4254-7:2009

Sted og dato for erklæringen: [5]

Identitet på og underskrift fra den person, som er bemyndiget til at udarbejde erklæringen: [6]

Navn og adresse på den person, som er bemyndiget til at udarbejde den tekniske fil:

Benedikt von Riedesel
Direktør, MacDon Europe GmbH
Hagenauer Straße 59
D-65203 Wiesbaden (Tyskland)
bvonriedesel@macdon.com

DE

Wir, [1]

Erklären hiermit, dass das Produkt:

Maschinentyp: [2]

Name & Modell: [3]

Seriennummer (n): [4]

alle relevanten Vorschriften der Richtlinie 2006/42/EG erfüllt.

Harmonisierte Standards wurden, wie in folgenden Artikeln angegeben, verwendet 7(2):

EN ISO 4254-1:2013
EN ISO 4254-7:2009

Ort und Datum der Erklärung: [5]

Name und Unterschrift der Person, die dazu befugt ist, die Erklärung auszustellen: [6]

Name und Anschrift der Person, die dazu berechtigt ist, die technischen Unterlagen zu erstellen:

Benedikt von Riedesel
General Manager, MacDon Europe GmbH
Hagenauer Straße 59
65203 Wiesbaden
bvonriedesel@macdon.com

ES

Nosotros [1]

declaramos que el producto:

Tipo de máquina: [2]

Nombre y modelo: [3]

Números de serie: [4]

cumple con todas las disposiciones pertinentes de la directriz 2006/42/EC.

Se utilizaron normas armonizadas, según lo dispuesto en el artículo 7(2):

EN ISO 4254-1:2013
EN ISO 4254-7:2009

Lugar y fecha de la declaración: [5]

Identidad y firma de la persona facultada para draw redactar la declaración: [6]

Nombre y dirección de la persona autorizada para elaborar el expediente técnico:

Benedikt von Riedesel
Gerente general - MacDon Europe GmbH
Hagenauer Straße 59
65203 Wiesbaden (Alemania)
bvonriedesel@macdon.com

ET

Meie, [1]

deklareerime, et toode

Seadme tüüp: [2]

Nimi ja mudel: [3]

Seerianumbrid: [4]

vastab kõigile direktiivi 2006/42/EÜ asjakohastele sätetele.

Kasutatud on järgnevaid harmoniseeritud standardeid, millele on viidatud ka punktis 7(2):

EN ISO 4254-1:2013
EN ISO 4254-7:2009

Deklaratsiooni koht ja kuupäev: [5]

Deklaratsiooni koostamiseks volitatud isiku nimi ja allkiri: [6]

Tehnilise dokumendi koostamiseks volitatud isiku nimi ja aadress:

Benedikt von Riedesel
Peadirektor, MacDon Europe GmbH
Hagenauer Straße 59
65203 Wiesbaden (Saksamaa)
bvonriedesel@macdon.com

FR

Nous soussignés, [1]

Déclarons que le produit :

Type de machine : [2]

Nom et modèle : [3]

Numéro(s) de série : [4]

Est conforme à toutes les dispositions pertinentes de la directive 2006/42/EC.

Utilisation des normes harmonisées, comme indiqué dans l'Article 7(2):

EN ISO 4254-1:2013
EN ISO 4254-7:2009

Lieu et date de la déclaration : [5]

Identité et signature de la personne ayant reçu le pouvoir de rédiger cette déclaration : [6]

Nom et adresse de la personne autorisée à constituer le dossier technique :

Benedikt von Riedesel
Directeur général, MacDon Europe GmbH
Hagenauer Straße 59
65203 Wiesbaden (Allemagne)
bvonriedesel@macdon.com

The Harvesting Specialists MacDon

1029534

Figure 2: EC Declaration of Conformity

EC Declaration of Conformity

IT

Noi, [1]

Dichiariamo che il prodotto:

Tipo di macchina: [2]

Nome e modello: [3]

Numero(i) di serie: [4]

soddisfa tutte le disposizioni rilevanti della direttiva 2006/42/CE.

Utilizzo degli standard armonizzati, come indicato nell'Articolo 7(2):

EN ISO 4254-1:2013

EN ISO 4254-7:2009

Luogo e data della dichiarazione: [5]

Nome e firma della persona autorizzata a redigere la dichiarazione: [6]

Nome e persona autorizzata a compilare il file tecnico:

Benedikt von Riedesel
General Manager, MacDon Europe GmbH
Hagenauer Straße 59
65203 Wiesbaden (Germania)
bvonriedesel@macdon.com

HU

Mi, [1]

Ezennel kijelentjük, hogy a következő termék:

Gép típusa: [2]

Név és modell: [3]

Szériaszám(ok): [4]

teljesíti a következő irányelv összes vonatkozó előírásait: 2006/42/EK.

Az alábbi harmonizált szabványok kerültek alkalmazásra a 7(2) cikkely szerint:

EN ISO 4254-1:2013

EN ISO 4254-7:2009

A nyilatkozattétel ideje és helye: [5]

Azon személy kiléte és aláírása, aki jogosult a nyilatkozat elkészítésére: [6]

Azon személy neve és aláírása, aki felhatalmazott a műszaki dokumentáció összeállítására:

Benedikt von Riedesel
Vezérigazgató, MacDon Europe GmbH
Hagenauer Straße 59
65203 Wiesbaden (Németország)
bvonriedesel@macdon.com

LT

Mes, [1]

Pareiškiame, kad šis produktas:

Mašinos tipas: [2]

Pavadinimas ir modelis: [3]

Serijos numeris (-iai): [4]

atitinka taikomus reikalavimus pagal Direktyvą 2006/42/EB.

Naudojami harmonizuoti standartai, kai nurodoma straipsnyje 7(2):

EN ISO 4254-1:2013

EN ISO 4254-7:2009

Deklaracijos vieta ir data: [5]

Asmens tapatybės duomenys ir parašas asmens, įgalioto sudaryti šią deklaraciją: [6]

Vardas ir pavardė asmens, kuris įgaliotas sudaryti šį techninį failą:

Benedikt von Riedesel
Generalinis direktorius, MacDon Europe GmbH
Hagenauer Straße 59
65203 Wiesbaden (Vokietija)
bvonriedesel@macdon.com

LV

Mēs, [1]

Deklarējam, ka produkts:

Mašīnas tips: [2]

Nosaukums un modelis: [3]

Sērijas numurs(-i): [4]

Atbilst visām būtiskajām Direktīvas 2006/42/EK prasībām.

Piemēroti šādi saskaņotie standarti , kā minēts 7. panta 2. punktā:

EN ISO 4254-1:2013

EN ISO 4254-7:2009

Deklarācijas parakstīšanas vieta un datums: [5]

Tās personas vārds, uzvārds un paraksts, kas ir pilnvarota sagatavot šo deklarāciju: [6]

Tās personas vārds, uzvārds un adrese, kas ir pilnvarota sastādīt tehnisko dokumentāciju:

Benedikts fon Rīdīzels
Ģenerāldirektors, MacDon Europe GmbH
Hagenauer Straße 59
65203 Wiesbaden (Vācija)
bvonriedesel@macdon.com

NL

Wij, [1]

Verklaren dat het product:

Machinetype: [2]

Naam en model: [3]

Serienummer(s): [4]

voldoet aan alle relevante bepalingen van de Richtlijn 2006/42/EC.

Geharmoniseerde normen toegepast, zoals vermeld in Artikel 7(2):

EN ISO 4254-1:2013

EN ISO 4254-7:2009

Plaats en datum van verklaring: [5]

Naam en handtekening van de bevoegde persoon om de verklaring op te stellen: [6]

Naam en adres van de geautoriseerde persoon om het technisch dossier samen te stellen:

Benedikt von Riedesel
Algemeen directeur, MacDon Europe GmbH
Hagenauer Straße 59
65203 Wiesbaden (Duitsland)
bvonriedesel@macdon.com

PO

My niżej podpisani, [1]

Oświadczamy, że produkt:

Typ urządzenia: [2]

Nazwa i model: [3]

Numer seryjny/numery seryjne: [4]

spełnia wszystkie odpowiednie przepisy dyrektywy 2006/42/WE.

Zastosowaliśmy następujące (zharmonizowane) normy zgodnie z artykułem 7(2):

EN ISO 4254-1:2013

EN ISO 4254-7:2009

Data i miejsce oświadczenia: [5]

Imię i nazwisko oraz podpis osoby upoważnionej do przygotowania deklaracji: [6]

Imię i nazwisko oraz adres osoby upoważnionej do przygotowania dokumentacji technicznej:

Benedikt von Riedesel
Dyrektor generalny, MacDon Europe GmbH
Hagenauer Straße 59
65203 Wiesbaden (Niemcy)
bvonriedesel@macdon.com

PT

Nós, [1]

Declaramos, que o produto:

Tipo de máquina: [2]

Nome e Modelo: [3]

Número(s) de Série: [4]

cumpre todas as disposições relevantes da Directiva 2006/42/CE.

Normas harmonizadas aplicadas, conforme referido no Artigo 7(2):

EN ISO 4254-1:2013

EN ISO 4254-7:2009

Local e data da declaração: [5]

Identidade e assinatura da pessoa autorizada a elaborar a declaração: [6]

Nome e endereço da pessoa autorizada a compilar o ficheiro técnico:

Benedikt von Riedesel
Gerente Geral, MacDon Europa Ltda.
Hagenauer Straße 59
65203 Wiesbaden (Alemanha)
bvonriedesel@macdon.com

RO

Noi, [1]

Declarăm, că următorul produs:

Tipul mașinii: [2]

Denumirea și modelul: [3]

Număr (numere) serie: [4]

corespunde tuturor dispozițiilor esențiale ale directivei 2006/42/EC.

Au fost aplicate următoarele standarde armonizate conform articolului 7(2):

EN ISO 4254-1:2013

EN ISO 4254-7:2009

Data și locul declarației: [5]

Identitatea și semnătura persoanei împuternicite pentru întocmirea declarației: [6]

Numele și semnătura persoanei autorizate pentru întocmirea cărții tehnice:

Benedikt von Riedesel
Manager General, MacDon Europe GmbH
Hagenauer Straße 59
65203 Wiesbaden (Germania)
bvonriedesel@macdon.com

SR

Mi, [1]

Izjavljujemo da proizvod

Tip mašine: [2]

Naziv i model: [3]

Serijski broj(evi): [4]

Ispunjava sve relevantne odredbe direktive 2006/42/EC.

Korišćeni su usklađeni standardi kao što je navedeno u članu 7(2):

EN ISO 4254-1:2013

EN ISO 4254-7:2009

Datum i mesto izdavanja deklaracije: [5]

Identitet i potpis lica ovlašćenog za sastavljanje deklaracije: [6]

Ime i adresa osobe ovlašćene za sastavljanje tehničke datoteke:

Benedikt von Riedesel
Generalni direktor, MacDon Europe GmbH
Hagenauer Straße 59
65203 Wiesbaden (Nemačka)
bvonriedesel@macdon.com

SV

Vi, [1]

Intygar att produkten:

Maskintyp: [2]

Namn och modell: [3]

Serienummer: [4]

uppfyller alla relevanta villkor i direktivet 2006/42/EG.

Harmonierade standarder används, såsom anges i artikel 7(2):

EN ISO 4254-1:2013

EN ISO 4254-7:2009

Plats och datum för intyget: [5]

Identitet och signatur för person med befogenhet att upprätta intyget: [6]

Namn och adress för person behörig att upprätta den tekniska dokumentationen:

Benedikt von Riedesel
Administrativ chef, MacDon Europe GmbH
Hagenauer Straße 59
65203 Wiesbaden (Tyskland)
bvonriedesel@macdon.com

SL

Mi, [1]

izjavljamo, da izdelek:

Vrsta stroja: [2]

Ime in model: [3]

Serijska/-e številka/-e: [4]

ustreza vsem zadevnim določbam Direktive 2006/42/ES.

Uporabljeni usklajeni standardi, kot je navedeno v členu 7(2):

EN ISO 4254-1:2013

EN ISO 4254-7:2009

Kraj in datum izjave: [5]

Istovetnost in podpis osebe, opolnomočene za pripravo izjave: [6]

Ime in naslov osebe, pooblaščene za pripravo tehnične datoteke:

Benedikt von Riedesel
Generalni direktor, MacDon Europe GmbH
Hagenauer Straße 59
65203 Wiesbaden (Nemčija)
bvonriedesel@macdon.com

SK

My, [1]

týmto prehlasujeme, že tento výrobok:

Typ zariadenia: [2]

Názov a model: [3]

Výrobné číslo: [4]

spĺňa príslušné ustanovenia a základné požiadavky smernice č. 2006/42/ES.

Použité harmonizované normy, ktoré sa uvádzajú v Článku č. 7(2):

EN ISO 4254-1:2013

EN ISO 4254-7:2009

Miesto a dátum prehlásenia: [5]

Meno a podpis osoby oprávnenej vypracovať toto prehlásenie: [6]

Meno a adresa osoby oprávnenej zostaviť technický súbor:

Benedikt von Riedesel
Generálny riaditeľ MacDon Europe GmbH
Hagenauer Straße 59
65203 Wiesbaden (Nemecko)
bvonriedesel@macdon.com

1026012

Introduction

The PW8 Pick-Up Header is designed to pick up windrows and feed them into a combine. This manual contains operating and maintenance procedures for the PW8 Pick-Up Header for the following combines:

Combine	Model
Case IH	50/60/7088, 51/61/7130, 51/61/7140, 70/8010, 71/81/9120, 72/82/9230, and 72/82/9240
John Deere	96/97/9860STS, 96/97/9870, S650/660/670/680/690, 9660WTS, and T670
New Holland	All CR/CX Series
Versatile	RT490

When setting up the machine or making adjustments, review and follow the recommended machine settings in all relevant MacDon publications. Failure to do so may compromise machine function and machine life and may result in a hazardous situation.

MacDon provides warranty for Customers who operate and maintain their equipment as described in this manual. A copy of the MacDon Industries Limited Warranty Policy, which explains this warranty, should have been provided to you by your Dealer. Damage resulting from any of the following conditions will void the warranty:

- Accident
- Misuse
- Abuse
- Improper maintenance or neglect
- Abnormal or extraordinary use of the machine
- Failure to use the machine, equipment, component, or part in accordance with the manufacturer's instructions

Conventions

- Right and left are determined from the operator's position. The front of the header is the side that faces the crop; the back of the header is the side that connects to the combine.
- Unless otherwise noted, use the standard torque values provided in Chapter *8.1 Torque Specifications, page 273*.

NOTE:

Keep your MacDon publications up-to-date. The most current version can be downloaded from our website (*www.macdon.com*) or from our Dealer-only site (*https://portal.macdon.com*) (login required).

Keep this manual handy for frequent reference and to pass on to new Operators or Owners. The PW8 Pick-Up Header Parts Catalog also is supplied with your new header. Call your Dealer if you need assistance, information, or additional copies of the manuals.

Store the operator's manual and the parts catalog in the manual case (A) attached to the back of the header.

Carefully read all the material provided before attempting to maintain, service, or use the machine.

This manual is available in English, Portuguese, Spanish, and Russian.

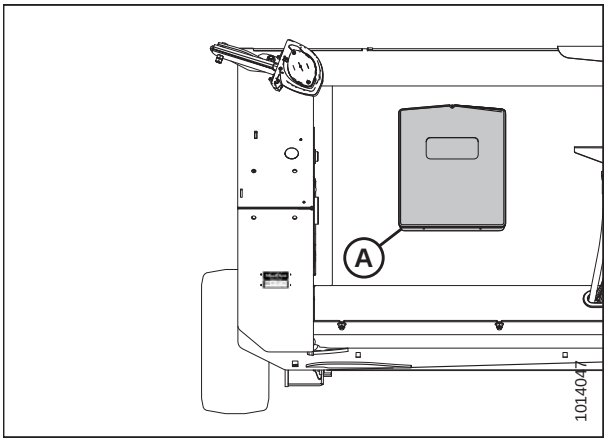

Figure 3: Manual Case

Summary of Changes

The following table lists the changes made from the previous version of this document:

Section	Summary of Change	Internal Use Only
California Proposition 65 Warning, page 2	Added Proposition 65 Warning information to manual.	ECN 57456
Declaration of Conformity, page i	Added new Declaration of Conformity.	—
• *3.3.5 Removing Right Endshield, page 34* • *3.3.6 Installing Right Endshield, page 35*	Updated illustrations.	ECN 57594
4.11 New Holland Combines (CR Series – Model Year 2015 and Later), page 150	Revised PW8 setup instructions.	Product Support
6.3 Combine Completion Package Kits, page 265	Updated completion package bundle numbers.	ECN 58276 ECN 58357
7 Troubleshooting, page 269	Reformatted Troubleshooting table.	Tech Pubs

Serial Number

The serial number plate (A) is located on the left endsheet.

Record the serial number of the PW8 Combine Pick-Up Header here:

_____

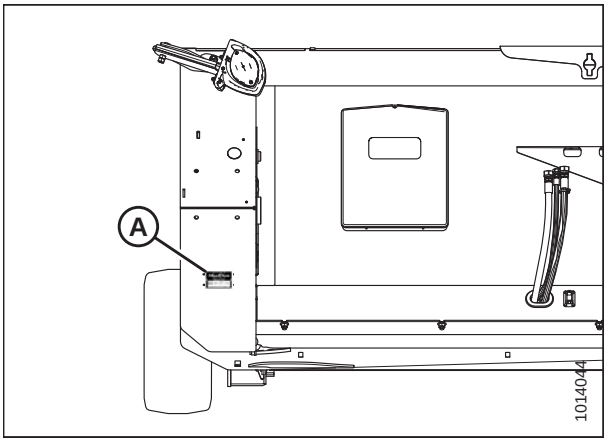

Figure 4: Left Side — Rear View

Chapter 1: Safety

1.1 Safety Alert Symbols

This safety alert symbol indicates important safety messages in this manual and on safety signs on the machine.

This symbol means:

- **ATTENTION!**
- **BECOME ALERT!**
- **YOUR SAFETY IS INVOLVED!**

Carefully read and follow the safety message accompanying this symbol.

Why is safety important to you?

- Accidents disable and kill
- Accidents cost
- Accidents can be avoided

Figure 1.1: Safety Symbol

1.2 Signal Words

Three signal words, **DANGER**, **WARNING**, and **CAUTION**, are used to alert you to hazardous situations. Two signal words, **IMPORTANT** and **NOTE**, identify non-safety related information. Signal words are selected using the following guidelines:

DANGER

Indicates an imminently hazardous situation that, if not avoided, will result in death or serious injury.

WARNING

Indicates a potentially hazardous situation that, if not avoided, could result in death or serious injury. It may also be used to alert against unsafe practices.

CAUTION

Indicates a potentially hazardous situation that, if not avoided, may result in minor or moderate injury. It may be used to alert against unsafe practices.

IMPORTANT:

Indicates a situation that, if not avoided, could result in a malfunction or damage to the machine.

NOTE:

Provides additional information or advice.

1.3 General Safety

CAUTION

The following general farm safety precautions should be part of your operating procedure for all types of machinery.

Protect yourself.

- When assembling, operating, and servicing machinery, wear all protective clothing and personal safety devices that could be necessary for job at hand. Do **NOT** take chances. You may need the following:
  - Hard hat
  - Protective footwear with slip-resistant soles
  - Protective glasses or goggles
  - Heavy gloves
  - Wet weather gear
  - Respirator or filter mask
- Be aware that exposure to loud noises can cause hearing impairment or loss. Wear suitable hearing protection devices such as earmuffs or earplugs to help protect against loud noises.
- Provide a first aid kit in case of emergencies.
- Keep a properly maintained fire extinguisher on the machine. Be familiar with its proper use.
- Keep young children away from machinery at all times.
- Be aware that accidents often happen when the operator is tired or in a hurry. Take time to consider safest way. **NEVER** ignore warning signs of fatigue.

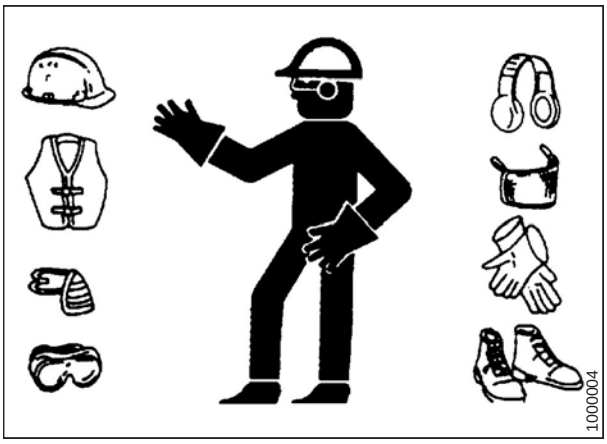

Figure 1.2: Safety Equipment

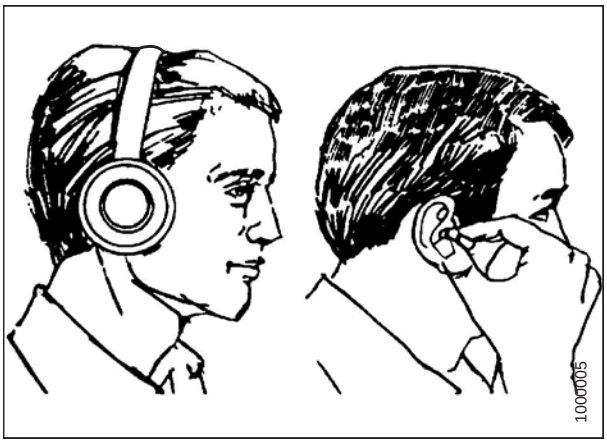

Figure 1.3: Safety Equipment

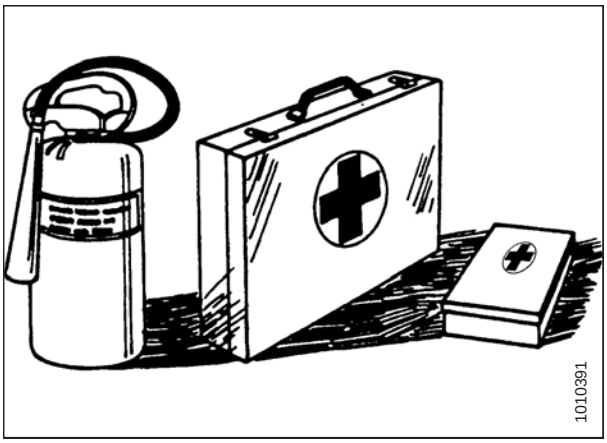

Figure 1.4: Safety Equipment

- Wear close-fitting clothing and cover long hair. **NEVER** wear dangling items such as scarves or bracelets.
- Keep all shields in place. **NEVER** alter or remove safety equipment. Make sure driveline guards can rotate independently of shaft and can telescope freely.
- Use only service and repair parts made or approved by equipment manufacturer. Substituted parts may not meet strength, design, or safety requirements.

Figure 1.5: Safety around Equipment

- Keep hands, feet, clothing, and hair away from moving parts. **NEVER** attempt to clear obstructions or objects from a machine while engine is running.
- Do **NOT** modify machine. Unauthorized modifications may impair machine function and/or safety. It may also shorten machine's life.
- To avoid injury or death from unexpected startup of machine, **ALWAYS** stop the engine and remove the key from the ignition before leaving the operator's seat for any reason.

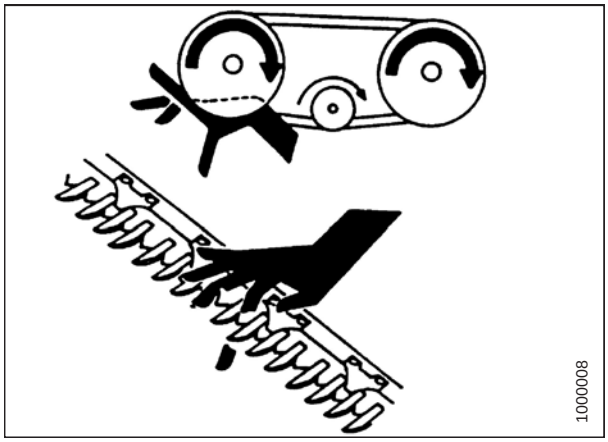

Figure 1.6: Safety around Equipment

- Keep service area clean and dry. Wet or oily floors are slippery. Wet spots can be dangerous when working with electrical equipment. Be sure all electrical outlets and tools are properly grounded.
- Keep work area well lit.
- Keep machinery clean. Straw and chaff on a hot engine is a fire hazard. Do **NOT** allow oil or grease to accumulate on service platforms, ladders, or controls. Clean machines before storage.
- **NEVER** use gasoline, naphtha, or any volatile material for cleaning purposes. These materials may be toxic and/or flammable.
- When storing machinery, cover sharp or extending components to prevent injury from accidental contact.

Figure 1.7: Safety around Equipment

1.4 Maintenance Safety

To ensure your safety while maintaining machine:

- Review operator's manual and all safety items before operation and/or maintenance of machine.
- Place all controls in Neutral, stop the engine, set the park brake, remove the ignition key, and wait for all moving parts to stop before servicing, adjusting, and/or repairing.
- Follow good shop practices:
  - Keep service areas clean and dry
  - Be sure electrical outlets and tools are properly grounded
  - Keep work area well lit

Figure 1.8: Safety around Equipment

- Relieve pressure from hydraulic circuits before servicing and/or disconnecting machine.
- Make sure all components are tight and that steel lines, hoses, and couplings are in good condition before applying pressure to hydraulic systems.
- Keep hands, feet, clothing, and hair away from all moving and/or rotating parts.
- Clear area of bystanders, especially children, when carrying out any maintenance, repairs, or adjustments.
- Install transport lock or place safety stands under frame before working under machine.
- If more than one person is servicing machine at same time, be aware that rotating a driveline or other mechanically-driven component by hand (for example, accessing a lubricant fitting) will cause drive components in other areas (belts, pulleys, and knives) to move. Stay clear of driven components at all times.
- Wear protective gear when working on machine.
- Wear heavy gloves when working on knife components.

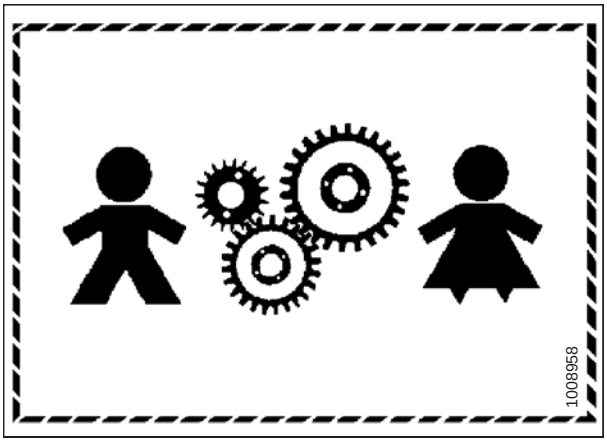

Figure 1.9: Equipment NOT Safe for Children

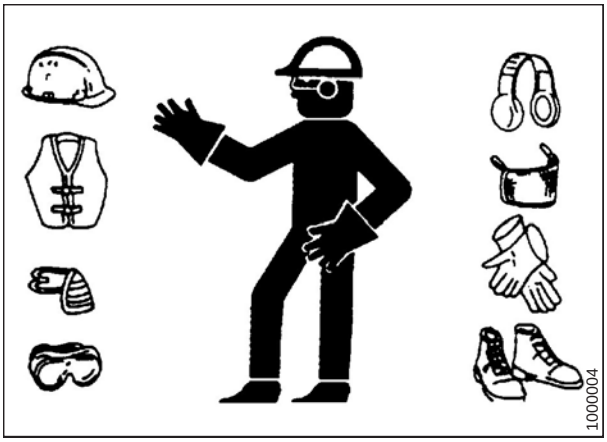

Figure 1.10: Safety Equipment

1.5 Hydraulic Safety

- Always place all hydraulic controls in Neutral before dismounting.
- Make sure that all components in hydraulic system are kept clean and in good condition.
- Replace any worn, cut, abraded, flattened, or crimped hoses and steel lines.
- Do **NOT** attempt any makeshift repairs to hydraulic lines, fittings, or hoses by using tapes, clamps, cements, or welding. The hydraulic system operates under extremely high-pressure. Makeshift repairs will fail suddenly and create hazardous and unsafe conditions.

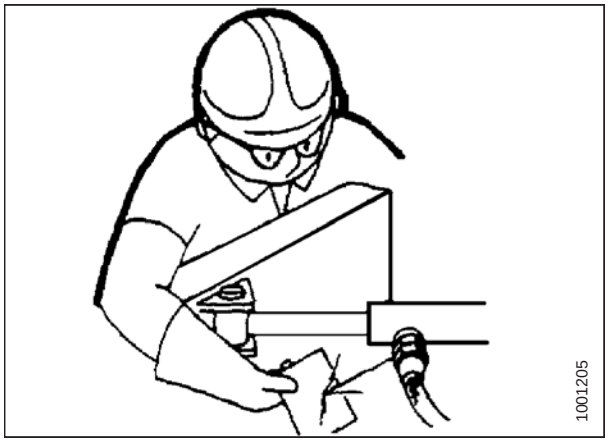

Figure 1.11: Testing for Hydraulic Leaks

- Wear proper hand and eye protection when searching for high-pressure hydraulic leaks. Use a piece of cardboard as a backstop instead of hands to isolate and identify a leak.
- If injured by a concentrated high-pressure stream of hydraulic fluid, seek medical attention immediately. Serious infection or toxic reaction can develop from hydraulic fluid piercing the skin.

Figure 1.12: Hydraulic Pressure Hazard

- Make sure all components are tight and steel lines, hoses, and couplings are in good condition before applying pressure to a hydraulic system.

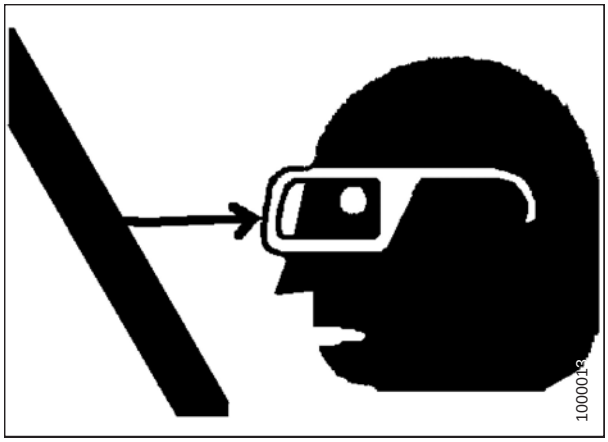

Figure 1.13: Safety around Equipment

1.6 Safety Signs

- Keep safety signs clean and legible at all times.
- Replace safety signs that are missing or illegible.
- If original part on which a safety sign was installed is replaced, be sure the repair part displays the current safety sign.
- Replacement safety signs are available from your MacDon Dealer Parts Department.

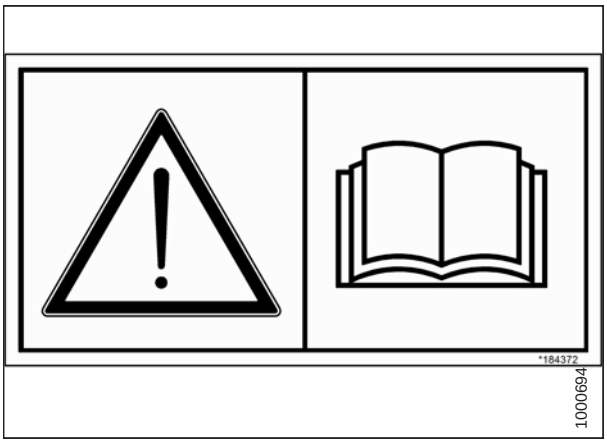

Figure 1.14: Operator's Manual Decal

1.6.1 Installing Safety Decals

1. Clean and dry installation area.
2. Decide on exact location before you remove decal backing paper.
3. Remove smaller portion of split backing paper.
4. Place decal in position and slowly peel back remaining paper, smoothing decal as it is applied.
5. Prick small air pockets with a pin and smooth out.

1.7 Safety Sign Locations

Figure 1.15: Header Decals – Case IH

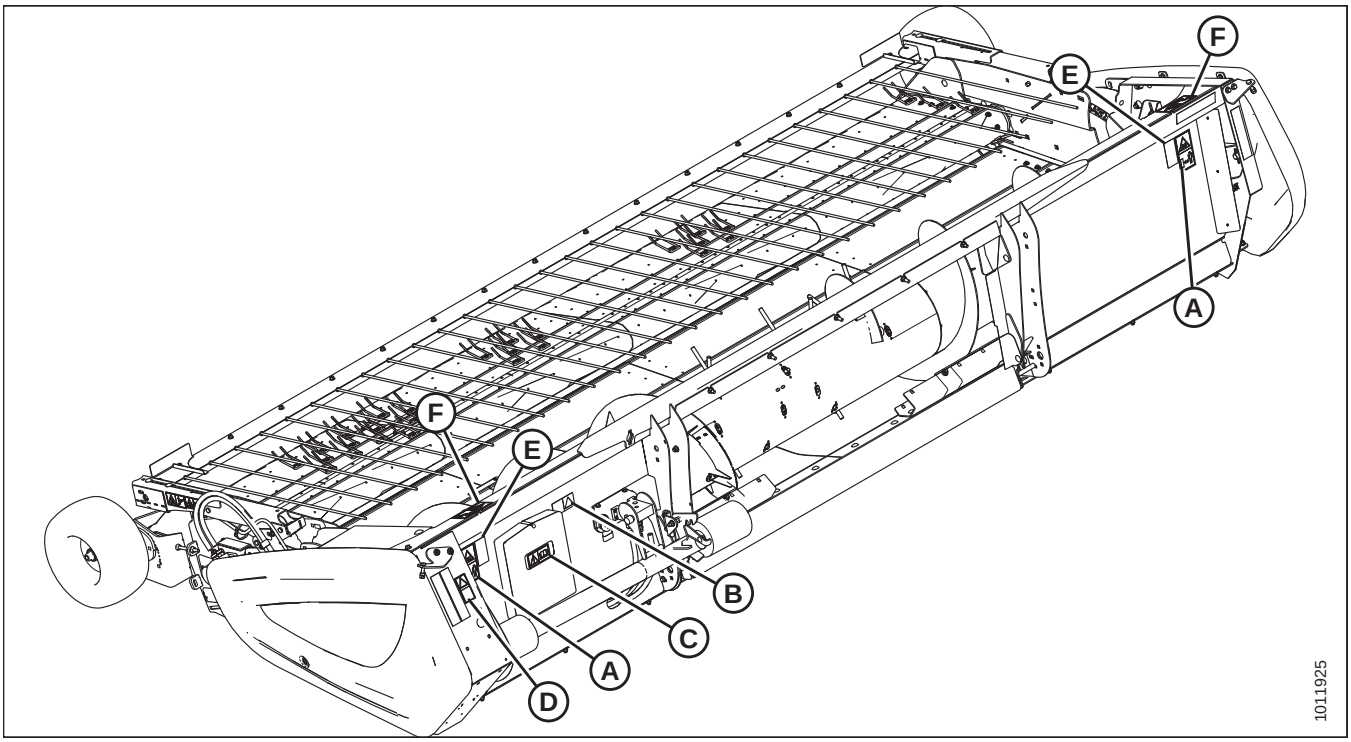

A - MD #184370
B - MD #166466
C - MD #184372
D - MD #184422
E - MD #184420
F - MD #237298

Figure 1.16: Header Decals

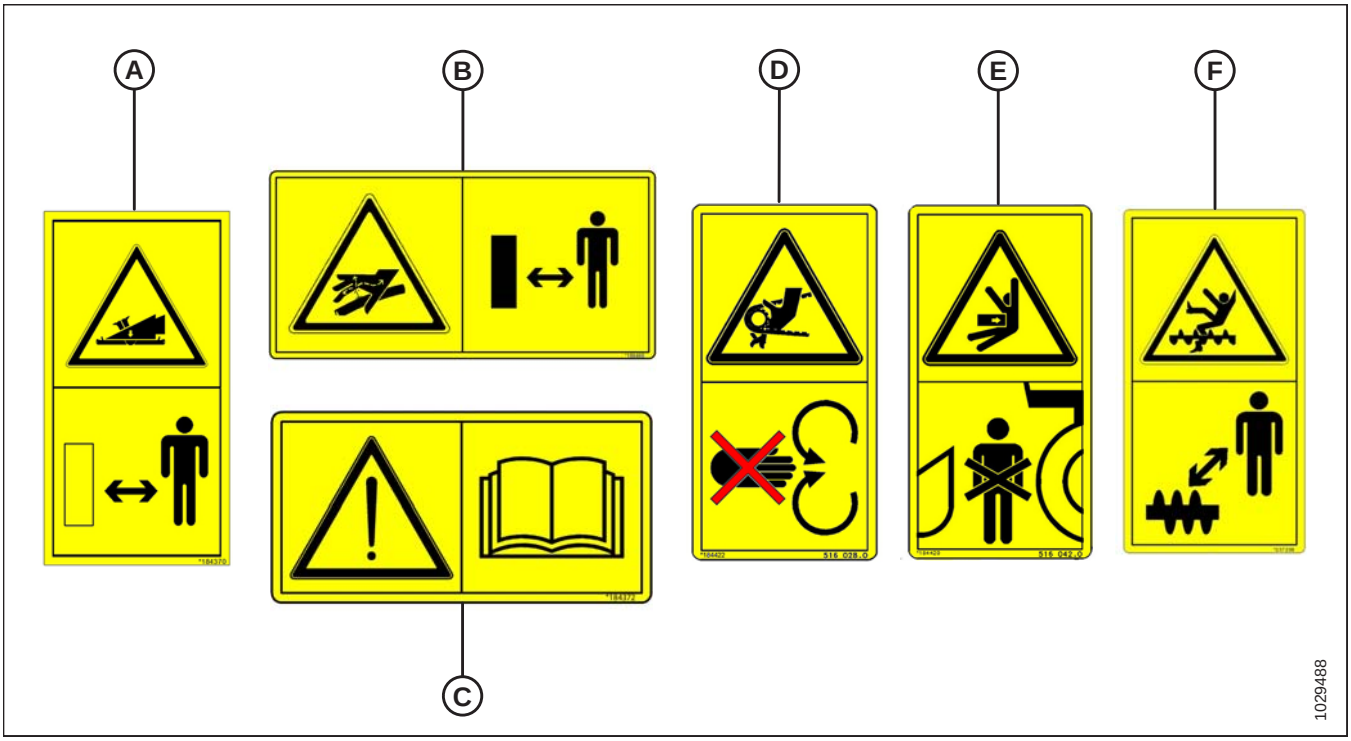

Figure 1.17: Header Decals – John Deere

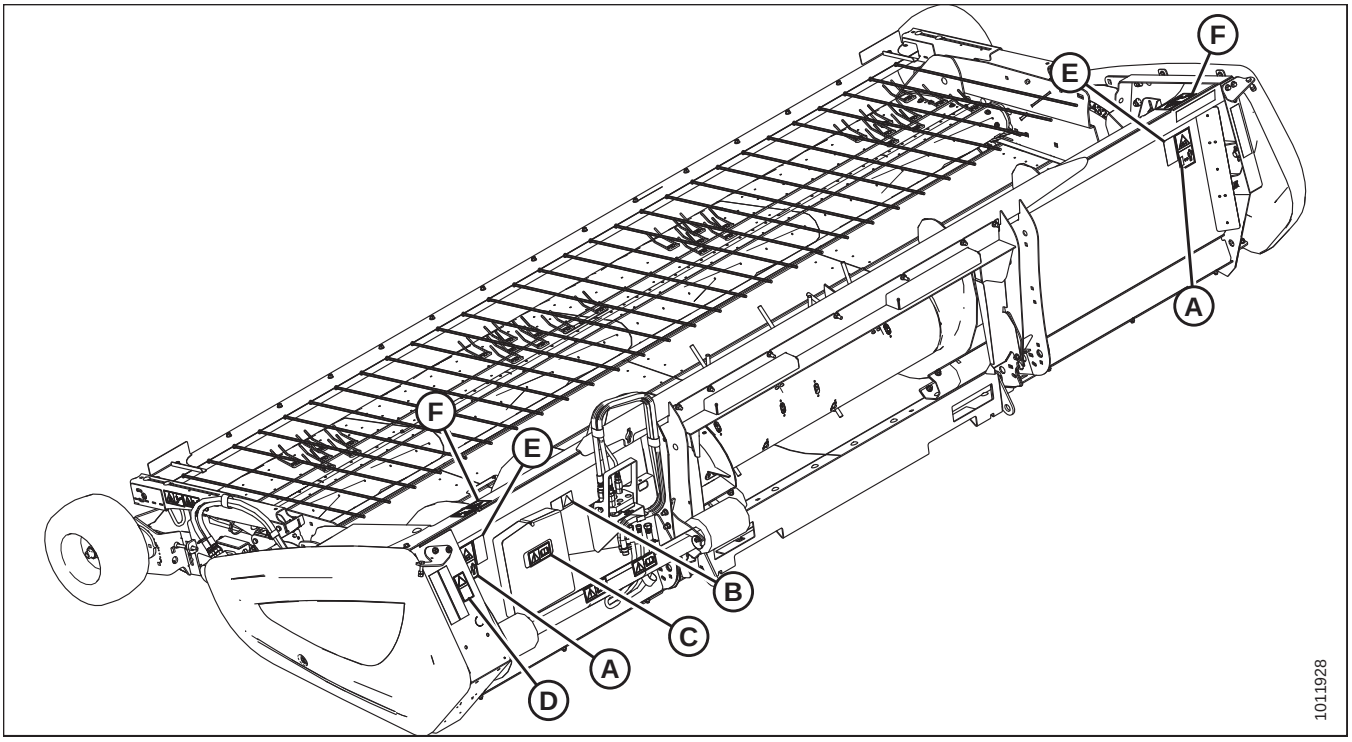

A - MD #184370
B - MD #166466
C - MD #184372
D - MD #184422
E - MD #184420
F - MD #237298

Figure 1.18: Header Decals

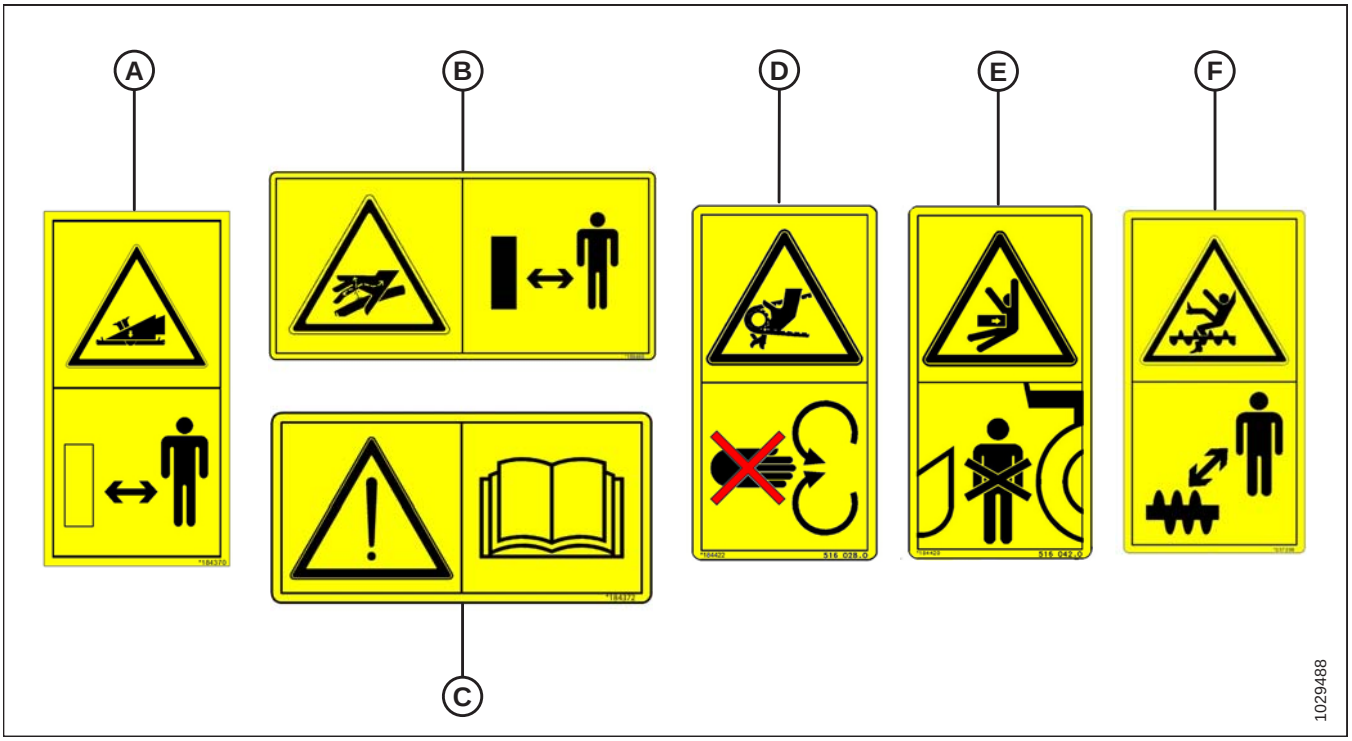

Figure 1.19: Header Decals – New Holland

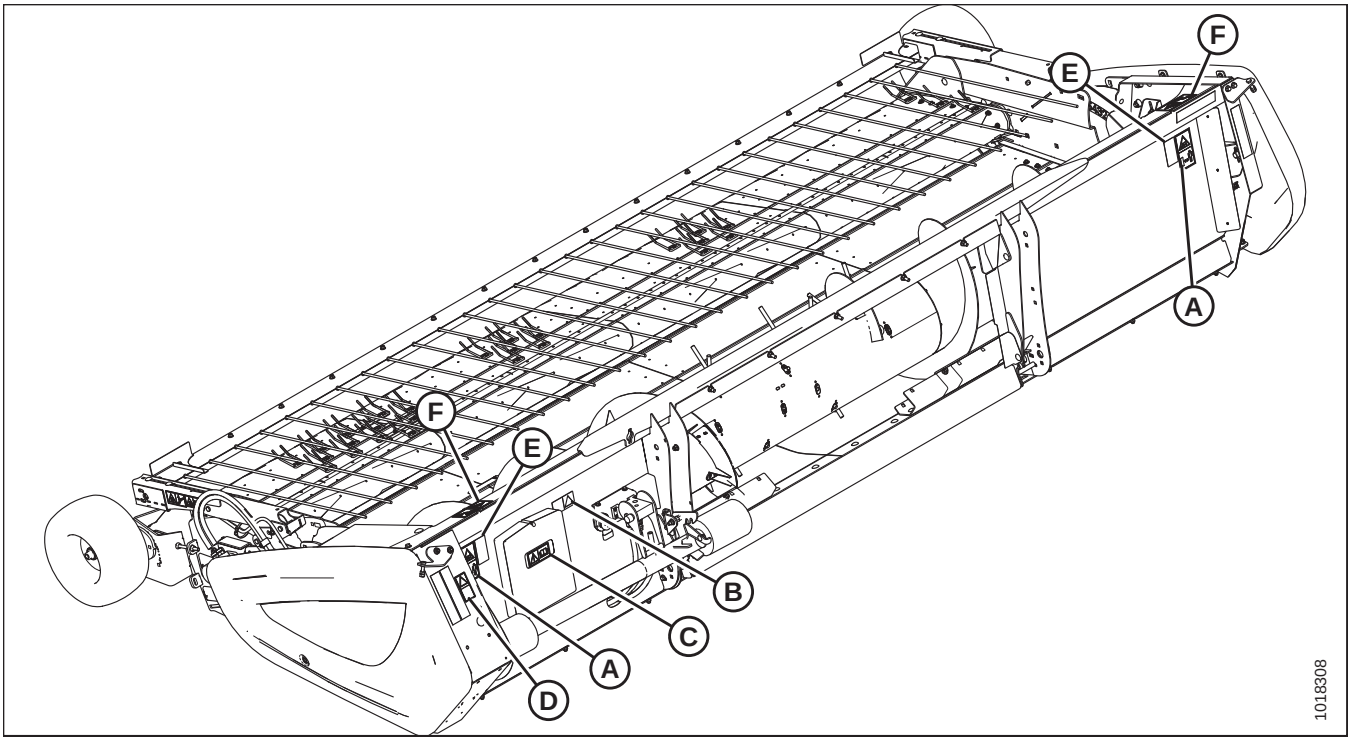

A - MD #184370
B - MD #166466
C - MD #184372
D - MD #184422
E - MD #184420
F - MD #237298

Figure 1.20: Header Decals

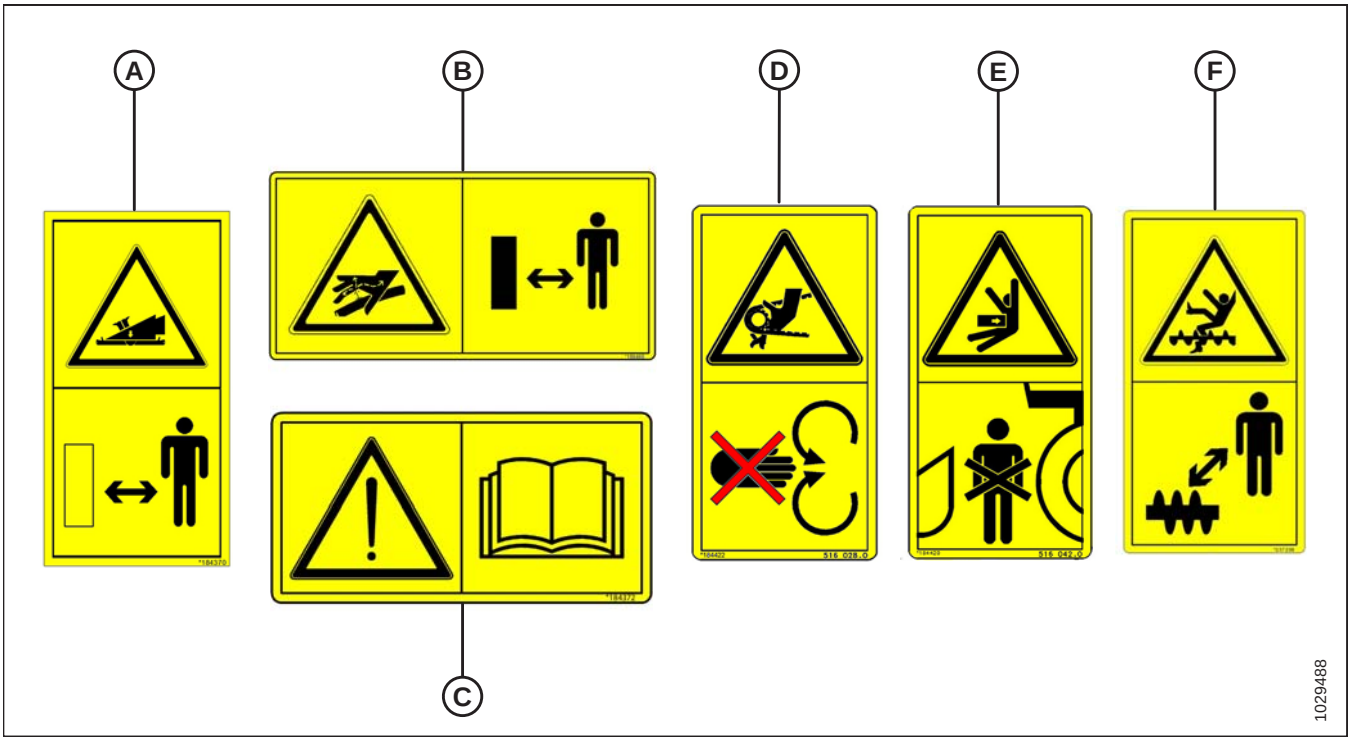

Figure 1.21: Header Decals – Versatile

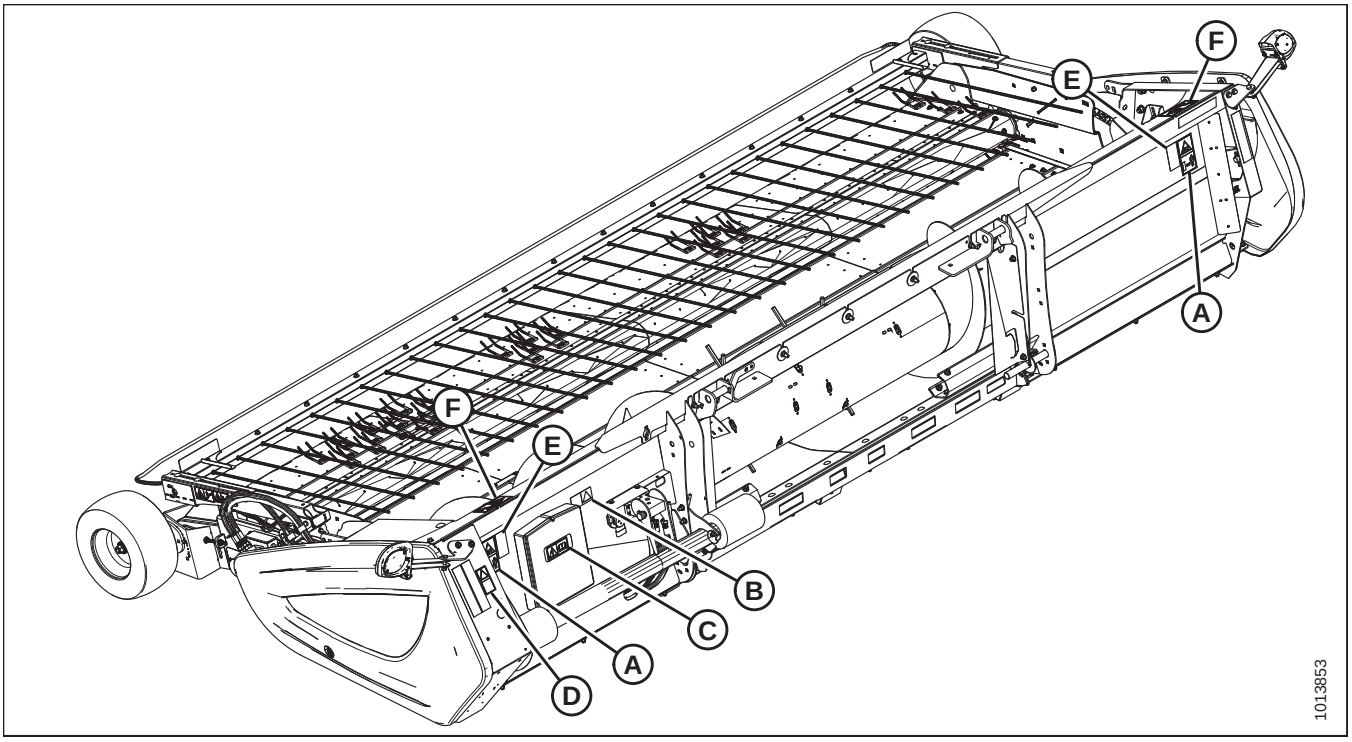

A - MD #184370
B - MD #166466
C - MD #184372
D - MD #184422
E - MD #184420
F - MD #237298

Figure 1.22: Header Decals

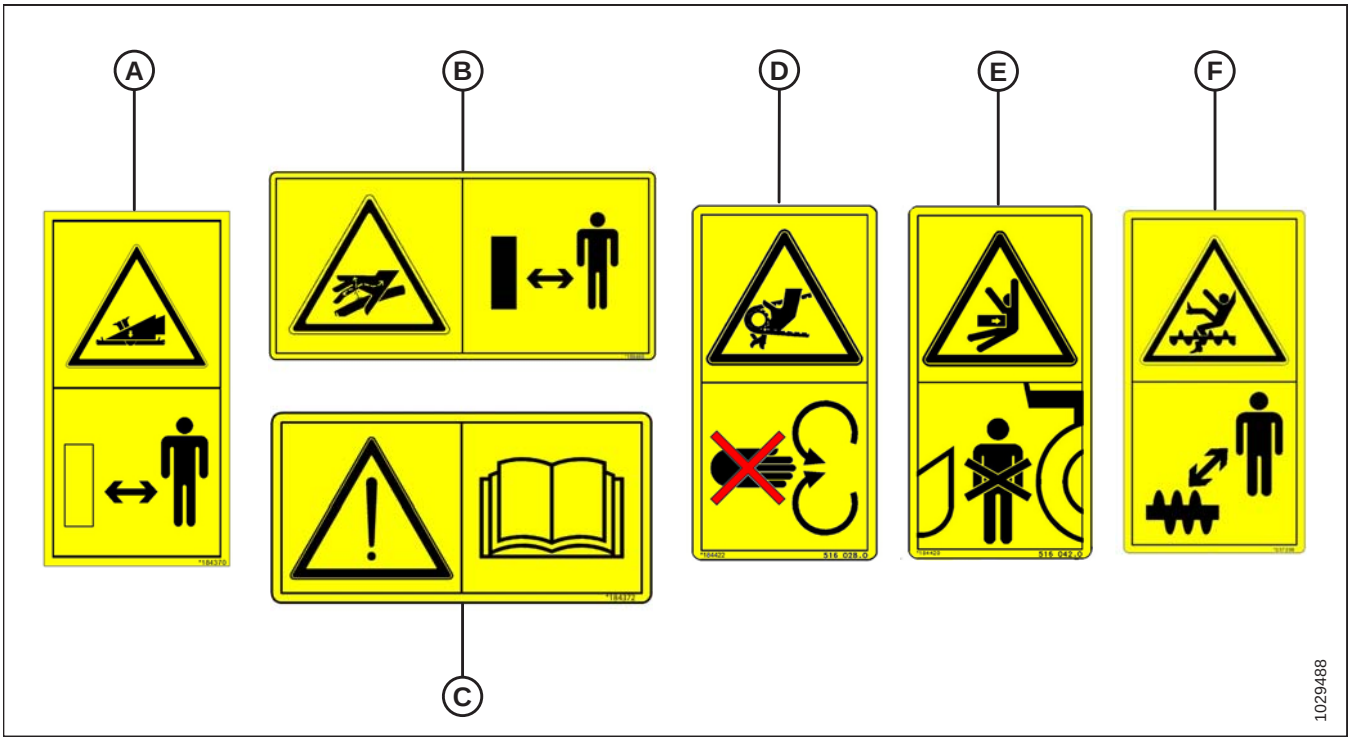

Figure 1.23: Driveline and Hold-Down Decals – Case IH

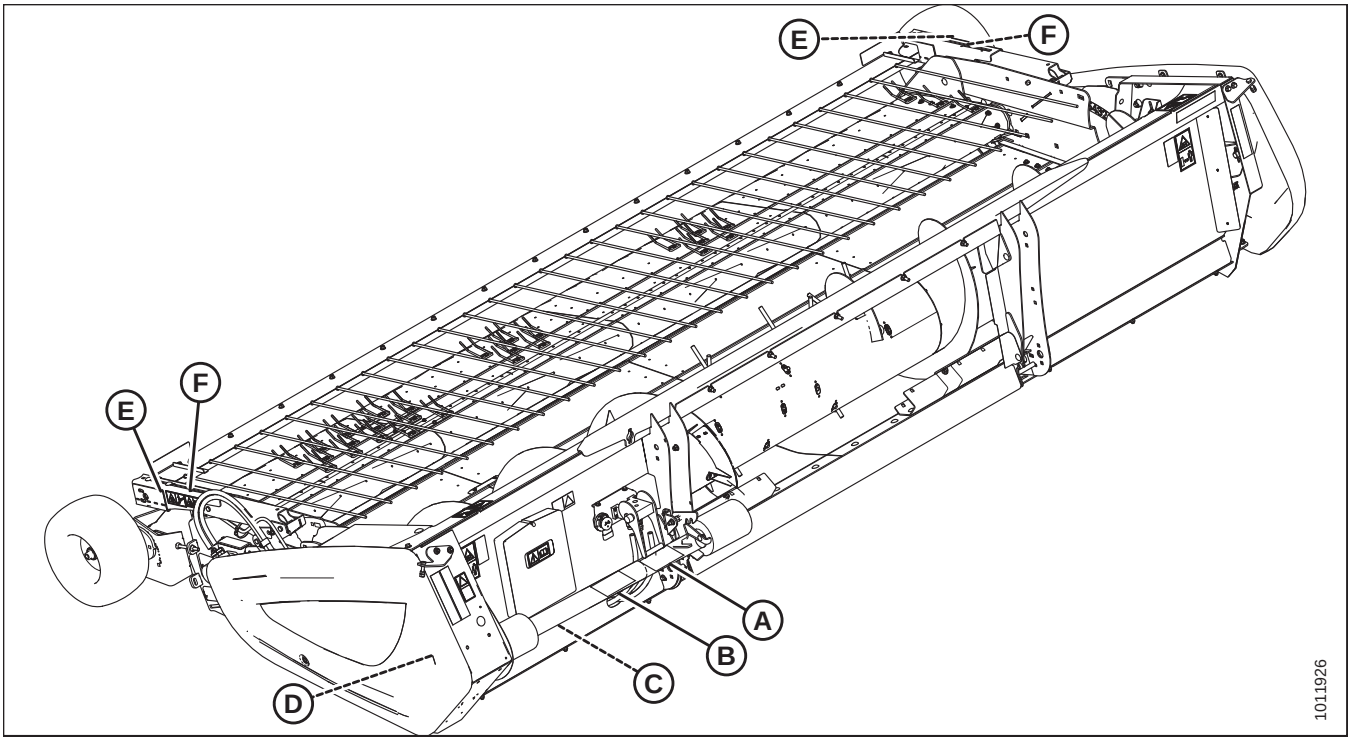

A - MD #30316
B - MD #191099
C - MD #36651
D - MD #184422 (Behind Endshield)
E - MD #237229
F - MD #237254

Figure 1.24: Driveline and Hold-Down Decals

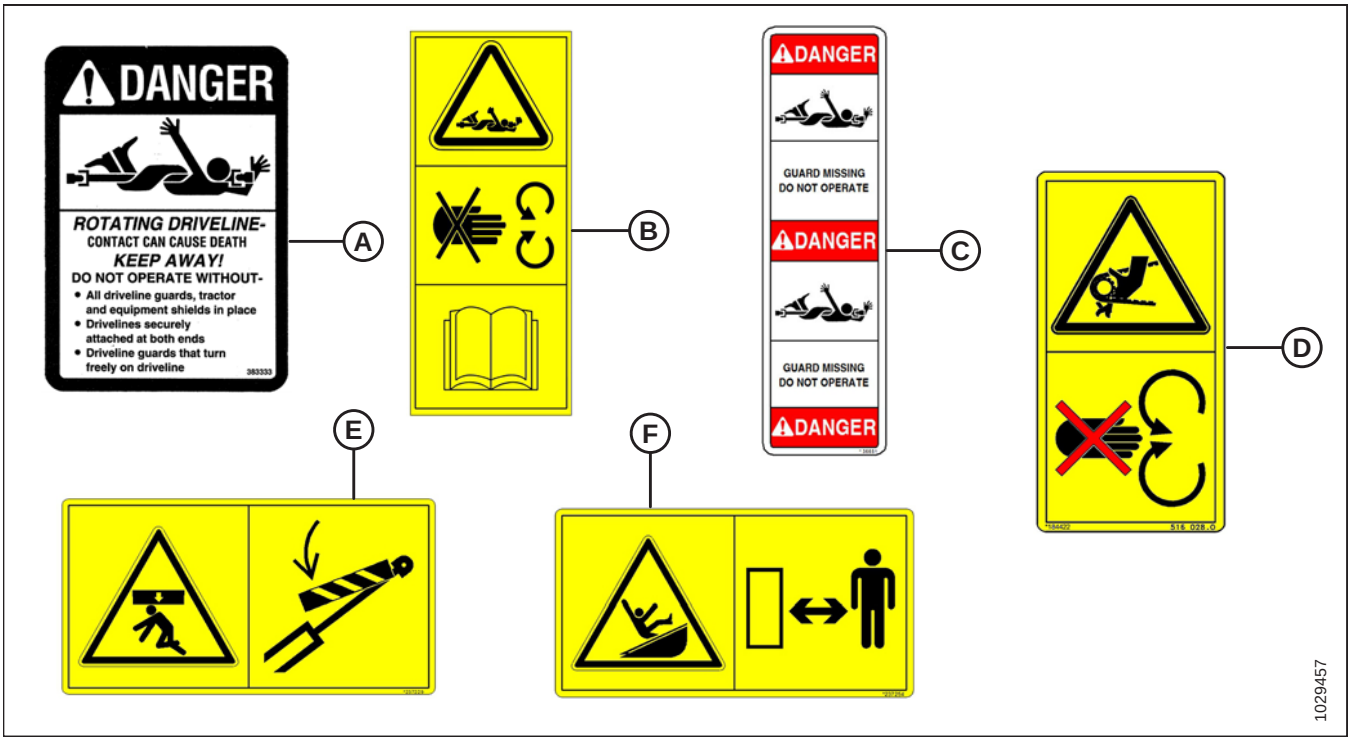

Figure 1.25: Driveline and Hold-Down Decals – John Deere

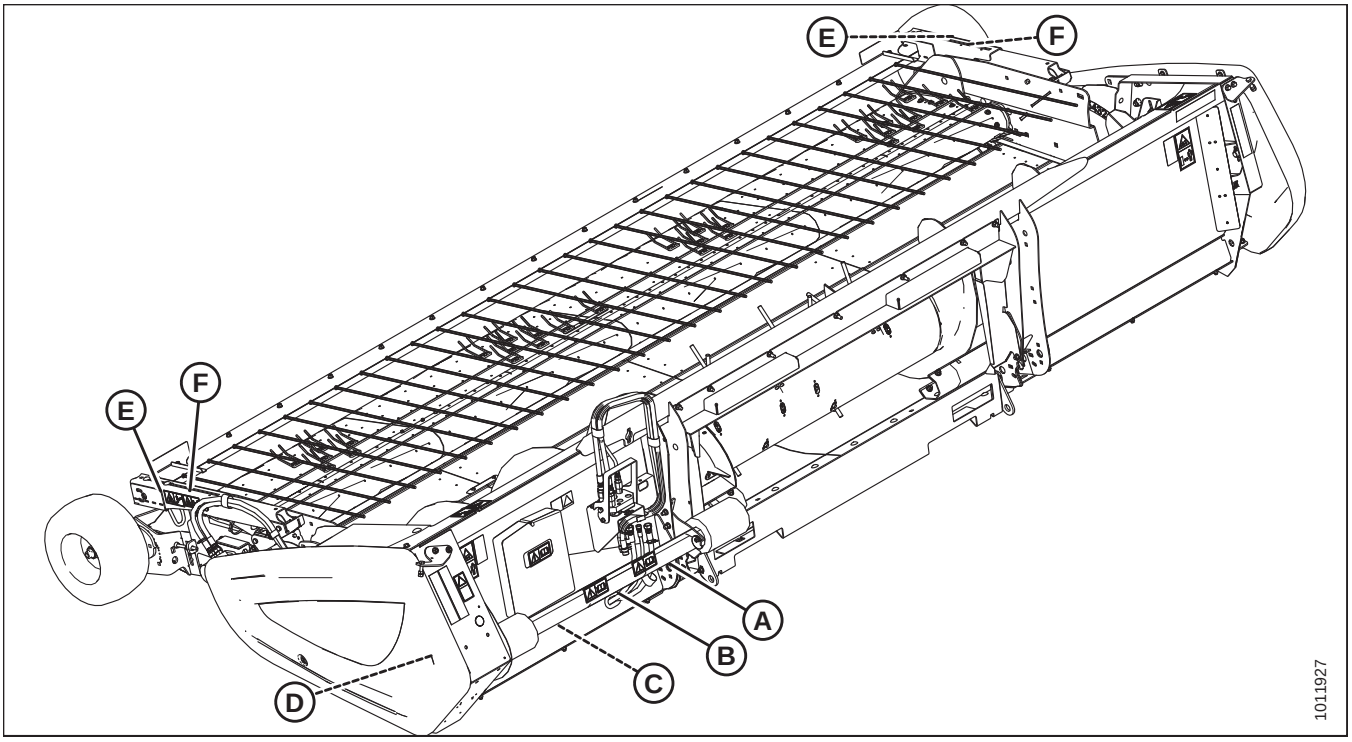

A - MD #30316
B - MD #191099
C - MD #36651
D - MD #184422 (Behind Endshield)
E - MD #237229
F - MD #237254

Figure 1.26: Driveline and Hold-Down Decals

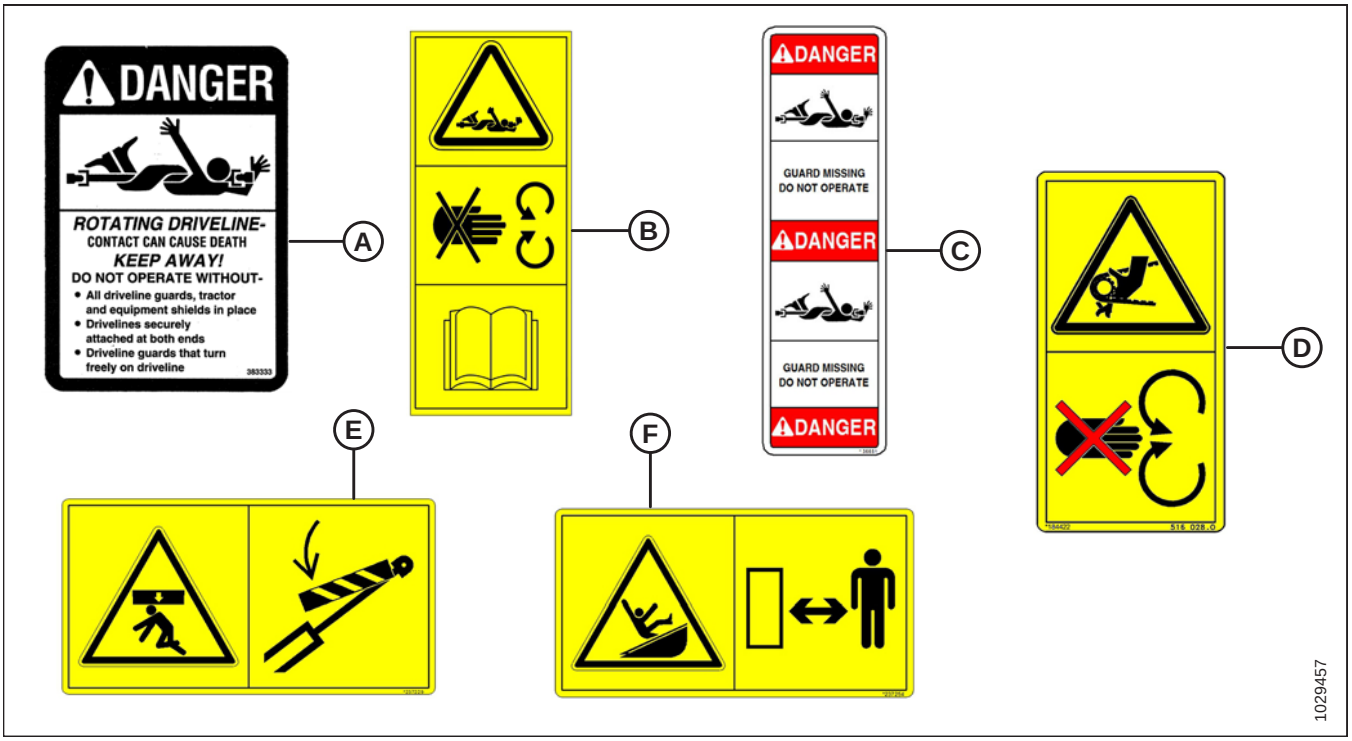

Figure 1.27: Driveline and Hold-Down Decals – New Holland

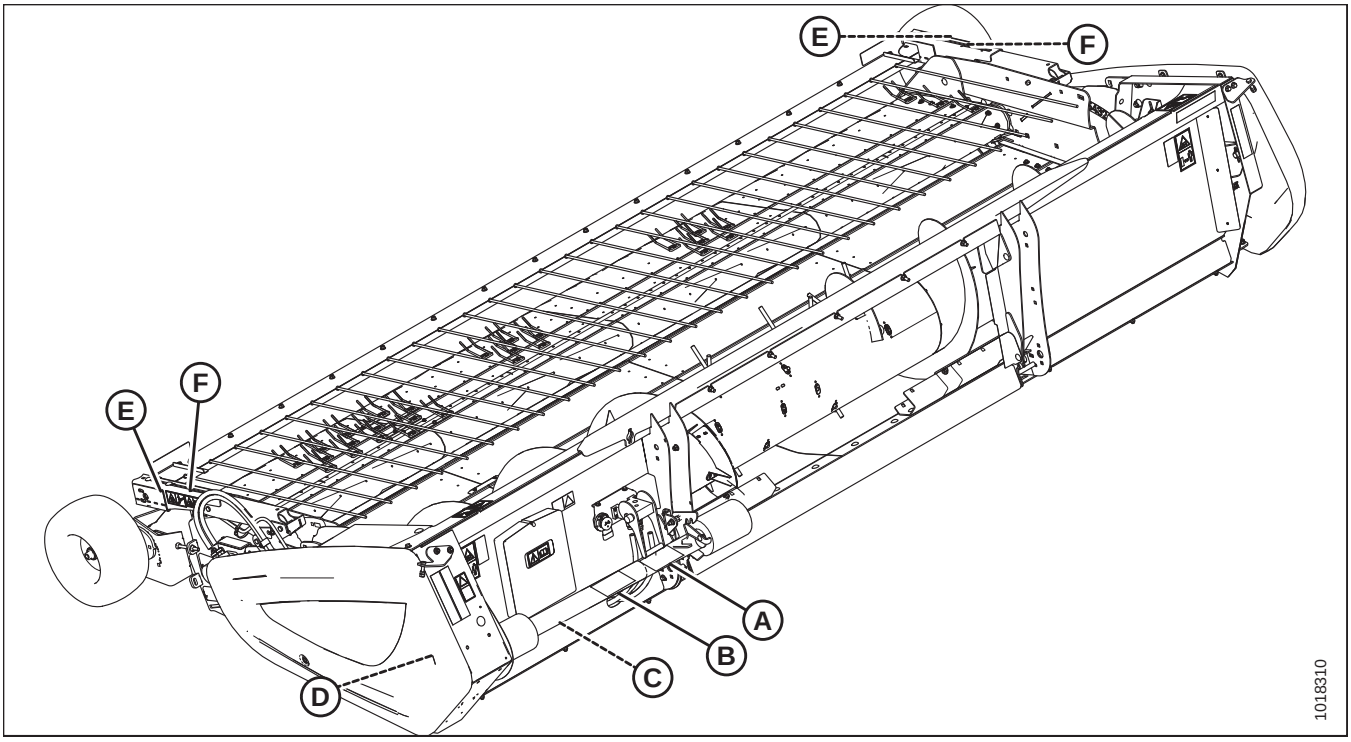

A - MD #30316
B - MD #191099
C - MD #36651
D - MD #184422 (Behind Endshield)
E - MD #237229
F - MD #237254

Figure 1.28: Driveline and Hold-Down Decals

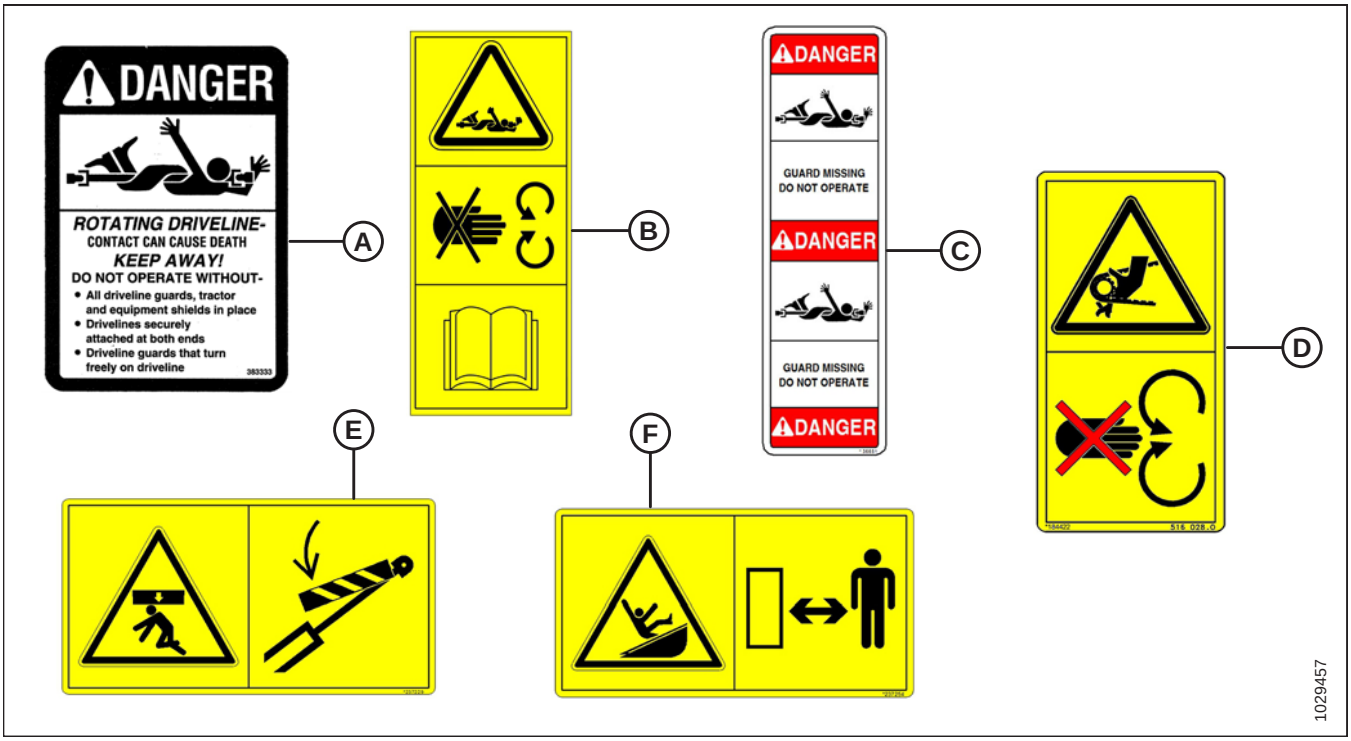

Figure 1.29: Driveline and Hold-Down Decals – Versatile

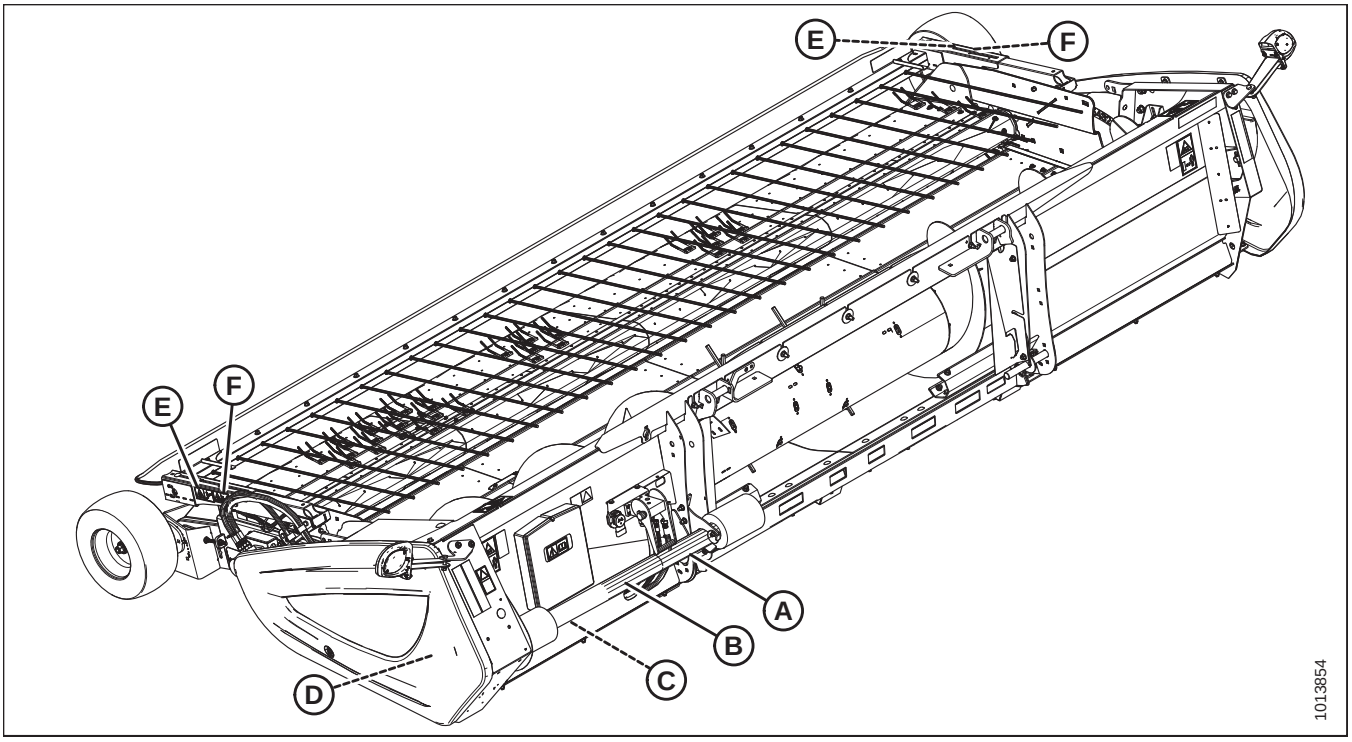

A - MD #30316
B - MD #191099
C - MD #36651
D - MD #184422 (Behind Endshield)
E - MD #237229
F - MD #237254

Figure 1.30: Driveline and Hold-Down Decals

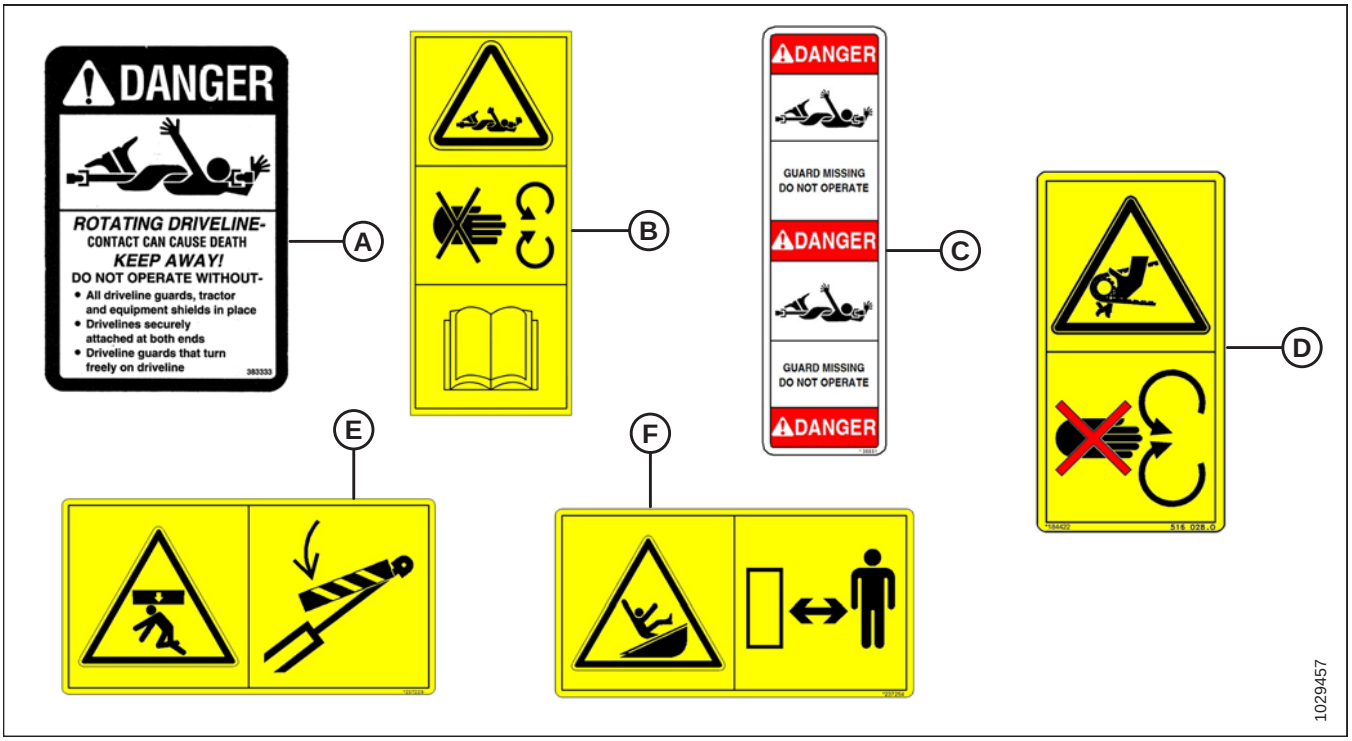

1.8 Understanding Safety Signs

MD #30316

Rotating driveline

DANGER

- Rotating driveline contact can cause death—**keep away**!

Do **NOT** operate without:

- All driveline guards, tractor, and equipment shields in place.
- Drivelines securely attached at both ends.
- Driveline guards that turn freely on driveline.

Figure 1.31: MD #30316

MD #36651

Rotating driveline

DANGER

- Rotating driveline contact can cause death—**keep away**!

Do **NOT** operate without:

- Stopping the engine and removing the key before opening shield.
- All driveline guards, tractor, and equipment shields in place.

Figure 1.32: MD #36651

MD #166466

High-pressure oil hazard

WARNING

- Do **NOT** go near leaks.
- High-pressure oil easily punctures skin, causing serious injury, gangrene, or death.
- If injured, seek emergency medical help. Immediate surgery is required to remove oil.
- Do **NOT** use finger or skin to check for leaks.
- Lower load or relieve hydraulic pressure before loosening fittings.

Figure 1.33: MD #166466

MD #184370

Crushing hazard

CAUTION

- Rest header on ground or engage cylinder safety props before going under unit.
- Failure to comply could result in death or serious injury.

Figure 1.34: MD #184370

MD #184372

General hazard pertaining to machine operation and servicing

CAUTION

To avoid injury or death from improper or unsafe machine operation:

- Read the operator's manual and follow all safety instructions. If you do not have a manual, obtain one from your Dealer.
- Do **NOT** allow untrained persons to operate the machine.
- Review safety instructions with all Operators annually.
- Ensure that all safety signs are installed and legible.
- Make certain everyone is clear of machine before starting engine and during operation.
- Keep riders off the machine.
- Keep all shields in place and stay clear of moving parts.
- Disengage header drive, put transmission in Neutral, and wait for all movement to stop before leaving operator's position.
- Stop the engine and remove the key from the ignition before servicing, adjusting, lubricating, cleaning, or unplugging machine.
- Engage safety props to prevent lowering of raised unit before servicing in the raised position.
- Use slow moving vehicle emblem and flashing warning lights when operating on roadways unless prohibited by law.

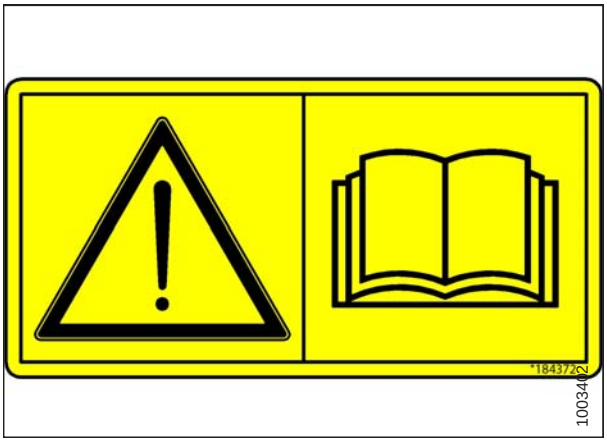

Figure 1.35: MD #184372

MD #184420

Crushing hazard

WARNING

- To avoid injury from being pinned or crushed, stay clear of header while machine is operating or in motion. Failure to comply could result in death or serious injury.

Figure 1.36: MD #184420

MD #184422

Chain drive hand and arm entanglement hazard

WARNING

- Do **NOT** open or remove safety shields while engine is running.
- To avoid injury, stop the engine and remove the key before opening shield.

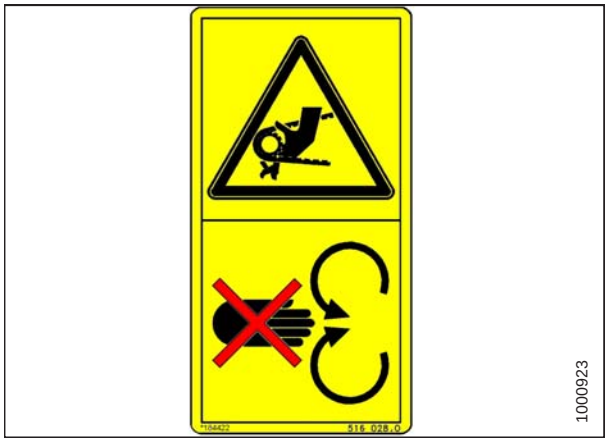

Figure 1.37: MD #184422

MD #191099

Auger entanglement hazard

CAUTION

- To avoid injury from entanglement with rotating auger, stand clear of header while machine is running.

General hazard pertaining to machine operation and servicing

CAUTION

- Read the operator's manual and follow safety instructions. If you do not have a manual, obtain one from your Dealer.
- Do **NOT** allow untrained persons to operate the machine.
- Review safety instructions with all Operators every year.
- Ensure that all safety signs are installed and legible.
- Make certain everyone is clear of machine before starting engine and during operation.
- Keep riders off the machine.
- Keep all shields in place and stay clear of moving parts.
- Disengage header drive, put transmission in Neutral, and wait for all movement to stop before leaving operator's position.
- Stop the engine and remove the key from the ignition before servicing, adjusting, lubricating, cleaning, or unplugging machine.
- Engage safety props to prevent lowering of unit before servicing in the raised position.
- Use slow moving vehicle emblem and flashing warning lights when operating on roadways unless prohibited by law.

Figure 1.38: MD #191099

MD #237229

Header crushing hazard

WARNING

- Rest header on ground or engage cylinder safety props before going under unit.

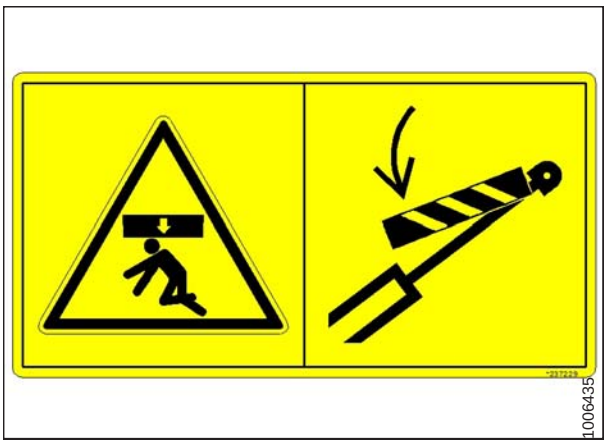

Figure 1.39: MD #237229

MD #237254

Header entanglement hazard

CAUTION

- To avoid injury from entanglement with crop gathering elements, stand clear of header while machine is running.

Figure 1.40: MD #237254

MD #237298

Auger entanglement hazard

CAUTION

- To avoid injury from rotating auger, stand clear of auger while machine is running.

Figure 1.41: MD #237298

Chapter 2: Product Overview

2.1 Header Specifications

Table 2.1 Header Specifications

Components	Specifications
Frame and Structure	
Width to edge of tires	Refer to *2.2 Header Dimensions, page 22*
Width (transport lights extended)	Refer to *2.2 Header Dimensions, page 22*
Depth	Refer to *2.2 Header Dimensions, page 22*
Height (transport lights extended)	Refer to *2.2 Header Dimensions, page 22*
Weight (not including completion packages)	1366 kg (3006 lb.)
Carrier	Case IH, New Holland, John Deere, Versatile
Lighting	Two amber transport
Manual storage	Header mounted manual storage case
Pick-up	
Actual picking width	Refer to *2.2 Header Dimensions, page 22*
Draper width	Refer to *2.2 Header Dimensions, page 22*
Quantity of pick-up fingers	392
Draper drives	Two 97 cc (5.9 cu. in.) hydraulic motors
Auger	
Diameter (including flighting)	615 mm (24 in.)
Tube diameter	410 mm (16 in.)
Quantity of fingers	13–22
Finger diameter	16 mm (5/8 in.) diameter induction hardened
Speed (combine dependent)	141–204 rpm
Driveline	
Type	Heavy duty PTO type, fully shielded with built-in clutch
Connections	Locking collar
Tires	
Size	18-1/2 / 8-1/2 x 8
Pressure	240–310 kPa (35–45 psi)

NOTE:

Specifications and design are subject to change without notice or obligation to revise previously sold units.

2.2 Header Dimensions

Figure 2.1: Header Dimensions

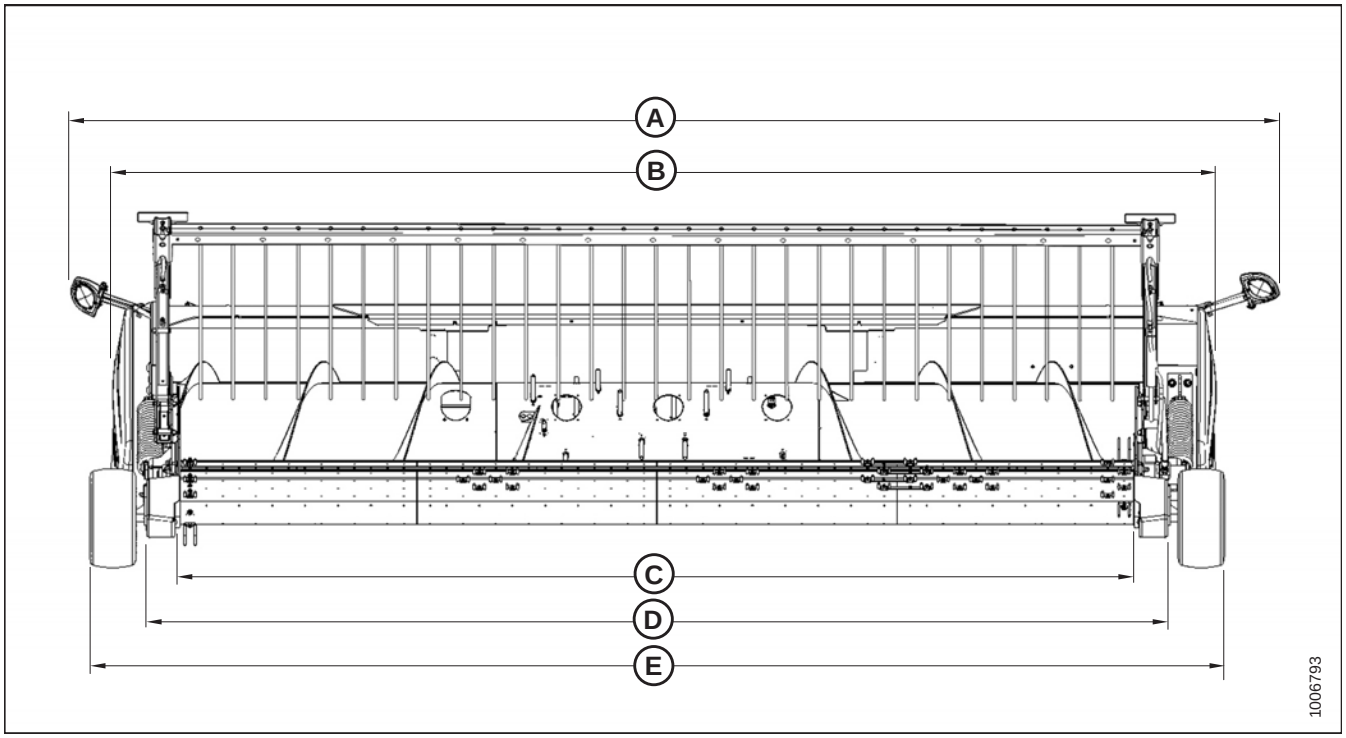

A - 565.8 cm (222 3/4 in.)
B - 516.9 cm (203 1/2 in.)
C - 452.3 cm (178 1/8 in.)
D - 476.6 cm (187 5/8 in.)
E - 531.8 cm (209 3/8 in.)

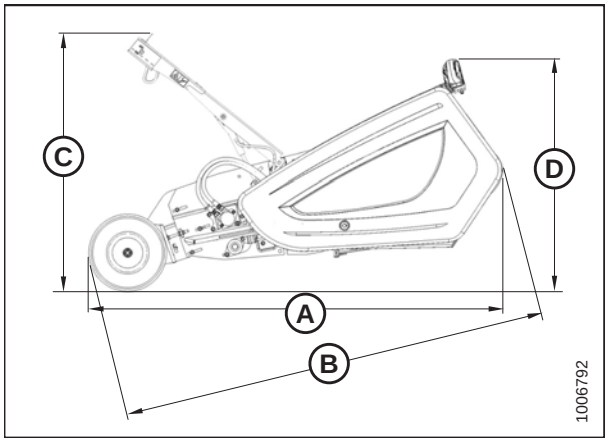

Figure 2.2: Header Dimensions

A - 246.1 cm (96 7/8 in.)
B - 251.3 cm (98 7/8 in.)
C - 154.4 cm (60 3/4 in.)
D - 138.1 cm (54 3/8 in.)

2.3 Component Identification

Figure 2.3: PW8 Header

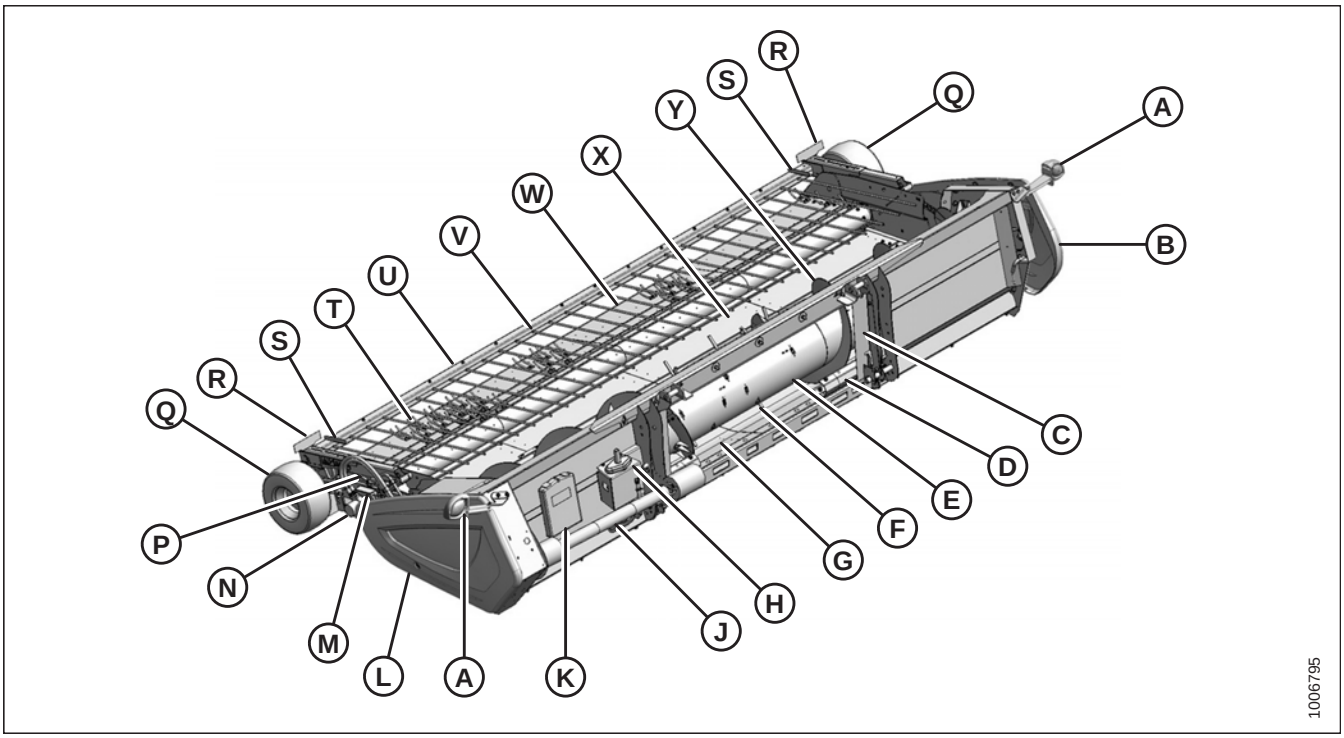

A - Transport Light
B - Endshield (Fixed)
C - Transition Frame
D - Stripper Plate
E - Auger
F - Auger Finger
G - Auger Pan
H - Multicoupler Receptacle
J - Driveline
K - Manual Case
L - Endshield (Latched)
M - Hold-Down Cylinder Safety Prop
N - Draper Drive Motor
P - Hold-Down Lift Cylinder
Q - Gauge Wheel
R - Reflector
S - Handle
T - Draper Finger
U - Hold-Down
V - Hold-Down Fiberglass Rod
W - Forward Draper Deck
X - Rear Draper Deck
Y - Auger Flighting

2.4 Definitions

The following definitions and acronyms may be used in this manual:

Term	Definition
API	American Petroleum Institute
ASTM	American Society of Testing and Materials
Bolt	A headed and externally threaded fastener that is designed to be paired with a nut
CGVW	Combined gross vehicle weight
Finger tight	Finger tight is a reference position where sealing surfaces or components are making contact with each other and the fitting has been tightened to a point where the fitting is no longer loose.
F.F.F.T.	Flats from finger tight
GVW	Gross vehicle weight
hp	Horsepower
JIC	Joint Industrial Council: A standards body that developed the standard sizing and shape for original 37° flared fitting.
n/a	Not applicable
Nut	An internally threaded fastener that is designed to be paired with a bolt
NPT	National Pipe Thread: A style of fitting used for low pressure port openings, threads on NPT fittings are uniquely tapered for an interference fit.
ORB	O-ring boss: A style of fitting commonly used in port openings on manifolds, pumps, and motors.
ORFS	O-ring face seal: A style of fitting commonly used for connecting hoses and tubes. This style of fitting is also commonly called an O-ring seal (ORS).
Pick-Up Header	A machine that attaches to a combine and picks up grain that has been cut and laid in windrows.
PTO	Power take-off
RoHS (Reduction of Hazardous Substances)	A directive by the European Union to restrict the use of certain hazardous substances (such as hexavalent chromium used in some yellow zinc platings)
SAE	Society of Automotive Engineers
Screw	A headed and externally threaded fastener that threads into preformed threads or forms its own thread in one of the mating parts.
Soft joint	A joint made with the use of a fastener where the joining materials are compressible or experience relaxation over a period of time.
spm	Strokes per minute
Tension	Axial load placed on a bolt or screw, usually measured in Newtons (N) or pounds (lb.).
T.F.F.T.	Turns from finger tight
Torque	The product of a force X lever arm length, usually measured in Newton-meters (Nm) or foot-pounds (lbf·ft).
Torque angle	A tightening procedure where the fitting is assembled to a precondition (finger tight) and then the nut is turned further a number of degrees or a number of flats to achieve its final position.

Term	Definition
Torque-tension	The relationship between the assembly torque applied to a piece of hardware and the axial load it induces in the bolt or screw.
Tractor	Agricultural-type tractor
Truck	A four-wheel highway/road vehicle weighing no less than 3400 kg (7500 lb.).
Washer	A thin cylinder with a hole or slot located in the center and is to be used as a spacer, load distribution element or a locking mechanism.

Chapter 3: Operation

3.1 Owner/Operator Responsibilities

CAUTION

- **It is your responsibility to read and understand this manual completely before operating the header. Contact your Dealer if an instruction is not clear to you.**
- **Follow all safety messages in the manual and on safety decals applied to the machine.**
- **Remember that YOU are the key to safety. Good safety practices protect you and the people around you.**
- **Before allowing anyone to operate the header, for however short a time or distance, make sure they have been instructed in its safe and proper use.**
- **Review the manual and all safety related items with all Operators annually.**
- **Be alert for other Operators not using recommended procedures or not following safety precautions. Immediately correct mistakes to prevent accidents.**
- **Do NOT modify the machine. Unauthorized modifications may impair function and/or safety and affect machine life.**
- **The safety information given in this manual does not replace safety codes, insurance needs, or laws governing your area. Be sure your machine meets the standards set by these regulations.**

3.2 Operational Safety

CAUTION

- **Follow all safety and operational instructions given in your combine Operator's Manual. If you do not have a combine manual, get one from your Dealer and read it thoroughly.**
- **Never start or move the machine until you are sure all bystanders have cleared the area.**
- **To avoid bodily injury or death from unexpected startup of machine, always stop combine engine and remove key before adjusting or removing plugged material from the machine.**
- **Check for excessive vibration and unusual noises. If there is any indication of trouble, shut down and inspect the machine.**

CAUTION

Follow proper shutdown procedure:

- **Engage combine brake.**
- **Turn off engine and remove key.**
- **Wait for all movement to stop.**
- **Dismount and engage safety props before inspecting raised machine.**
- **Operate only in daylight or good artificial light.**

3.3 Endshields

The endshields are molded polyethylene covers that are attached to the ends of the header. They provide shielding for the header drive components and also display the make of the combine. The left endshield is hinged to the endsheet and can be opened for routine maintenance or easily removed for major servicing. The right endshield is bolted directly to the header.

3.3.1 Opening Left Endshield

DANGER

To avoid bodily injury or death from unexpected startup of machine, always stop engine and remove key from ignition before leaving operator's seat for any reason.

1. Lower header to ground, shut down engine, and remove key from ignition.
2. Use a slotted screwdriver to unlock endshield (B) by turning latch (A) counterclockwise until it stops (slightly more than one half turn).

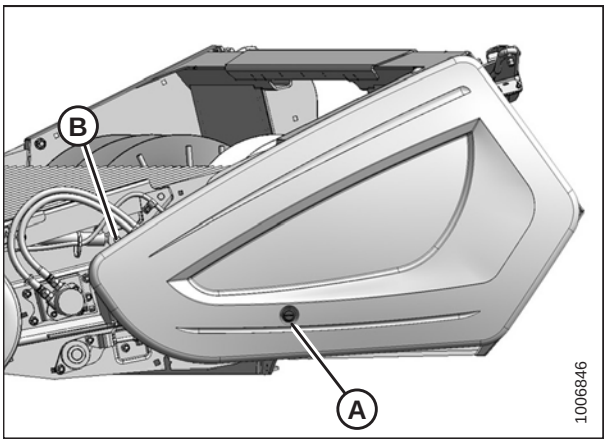

Figure 3.1: Endshield Closed

3. Grasp forward end of endshield (A) and pull open until support (B) engages and holds endshield in open position.

   NOTE:

   If additional access to the drive area is required, remove the endshield. Refer to *3.3.3 Removing Left Endshield, page 31*.

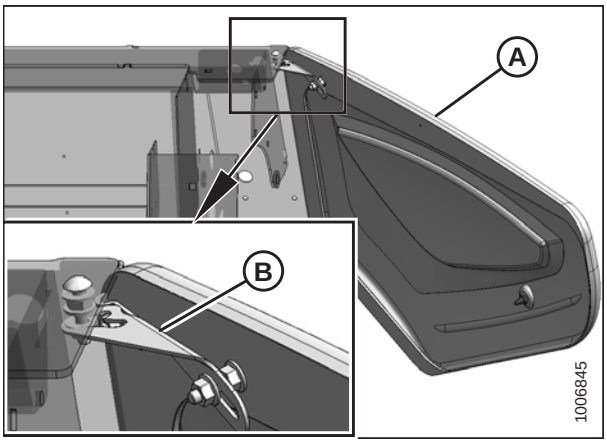

Figure 3.2: Endshield Open

3.3.2 Closing Left Endshield

1. Move endshield (A) slightly so support (B) can be moved out of the locked position.

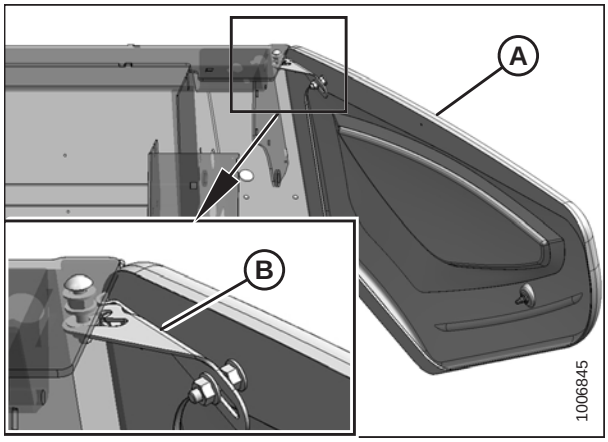

Figure 3.3: Endshield Support

2. Close endshield (A) ensuring magnet (B) and stop (C) in the header frame are aligned. This will ensure that latch (D) aligns with receptacle (E).

   NOTE:

   Latch (D) and magnet (B) positions are factory-set and should not require adjustment.

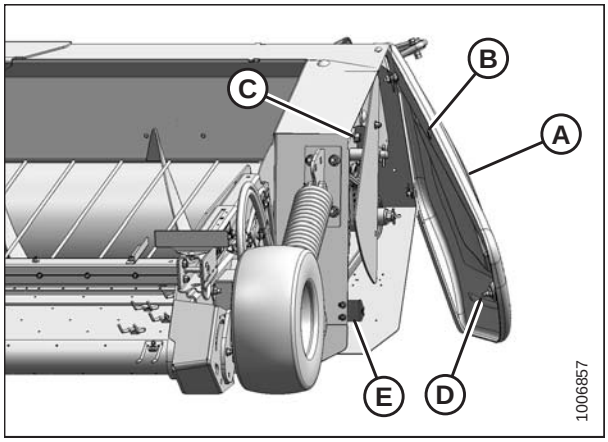

Figure 3.4: Endshield

3. If the front of the endshield needs to be raised or lowered, loosen nuts (B) on clips (C) at the back of endshield (A), and reposition the endshield. Tighten nuts (B).

   IMPORTANT:

   Do **NOT** overtighten nuts (B). Overtightening can damage the endshield.

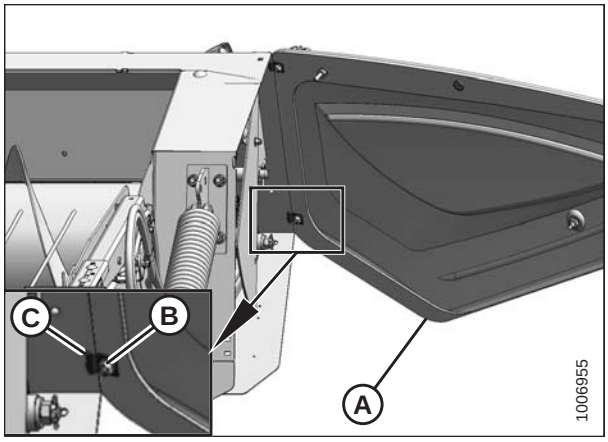

Figure 3.5: Endshield Adjustment

4. Close endshield (D) and use a slotted screwdriver to turn latch (A) clockwise until it stops (slightly more than one half turn).

   NOTE:

   When the latch is fully engaged, the slot will align with notch (C), and the endshield will draw tightly against the header.

5. Check that magnet (B) on the endshield is against the header endsheet and aligned with the cutout in the frame, and that latch (A) is engaged.

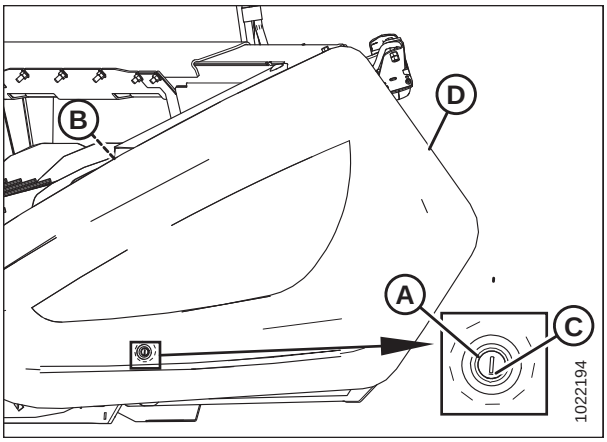

Figure 3.6: Endshield Closed

3.3.3 Removing Left Endshield

DANGER

To avoid bodily injury or death from unexpected startup of machine, always stop engine and remove key from ignition before leaving operator's seat for any reason.

1. Lower header to ground, shut down engine, and remove key from ignition.
2. Grasp the forward end of endshield (C) and pull it open until support (B) engages and holds the endshield in an open position.
3. Remove nut (A) securing support (B) to endshield (C), and move support (B) off the bolt.

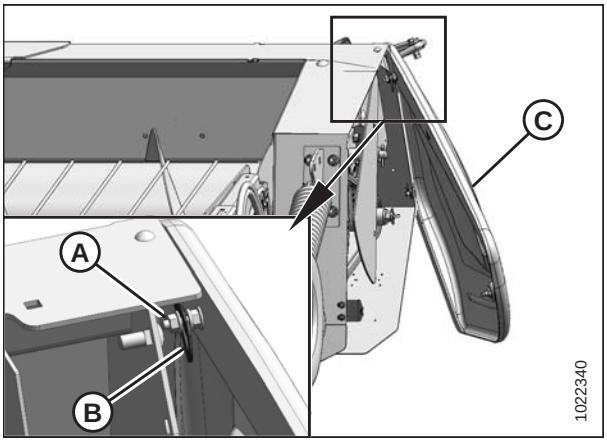

Figure 3.7: Removing Support

4. Swing endshield (A) fully back and loosen nuts (B) on clips (C) at the back of the endshield so the clips disengage the slots in the header frame.
5. Move endshield (A) away from the header.

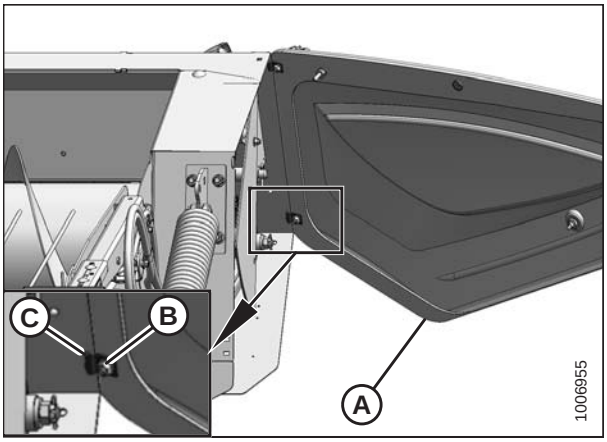

Figure 3.8: Removing Endshield

3.3.4 Installing Left Endshield

1. Hold endshield (A) up to the frame and insert clips (C) into the slots in the header frame.
2. Tighten nuts (B) on clips (C) just enough to hold the endshield in place.

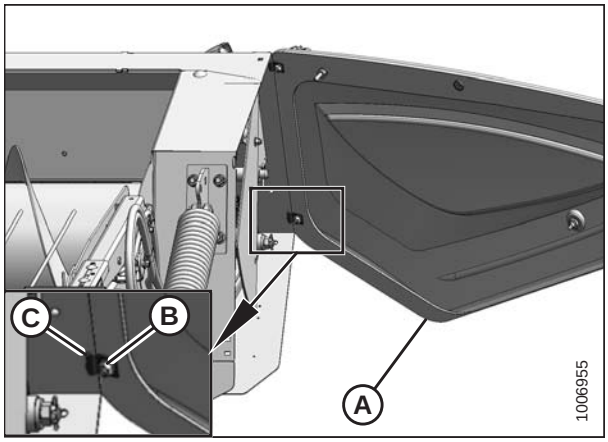

Figure 3.9: Attaching Endshield

3. Close endshield (A), ensuring magnet (B) and stop (C) in the header frame are aligned. Doing so will ensure that latch (D) aligns with receptacle (E).

   NOTE:

   Latch (D) and magnet (B) positions are factory-set and should not require adjustment.

4. If adjustment is necessary, loosen the nuts on the clips installed in Step *1, page 32* and reposition endshield (A). Tighten the nuts but do **NOT** overtighten. Overtightening the nuts can damage the endshield.

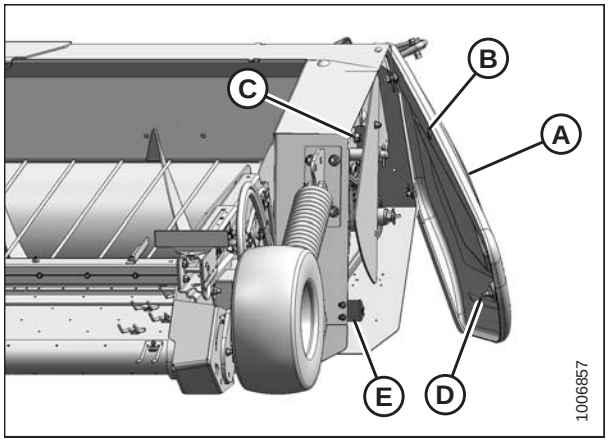

Figure 3.10: Aligning Endshield

5. Open endshield (C) slightly so support (B) can be installed onto the endshield. Check that washer (D) is between the support and the endshield.
6. Install nut (A), leaving a gap of 8–10 mm (5/16–3/8 in.) between the nut and washer (D), which allows support (B) to move.

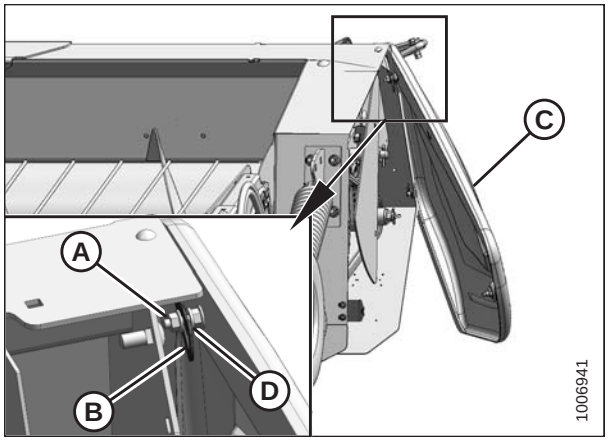

Figure 3.11: Attaching Support

7. Move endshield (A) slightly so support (B) can be moved out of the locked position.

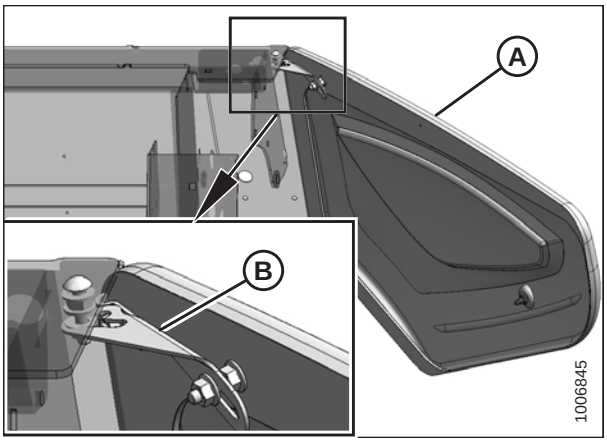

Figure 3.12: Endshield Support

8. Close endshield (D) and use a slotted screwdriver to turn latch (A) clockwise until it stops (slightly more than one half turn).

   NOTE:

   When the latch is fully engaged, the slot will align with notch (C), and the endshield will draw tightly against the header.

9. Check that magnet (B) on the endshield is against the header endsheet and aligned with the cutout in the frame, and that latch (A) is engaged.

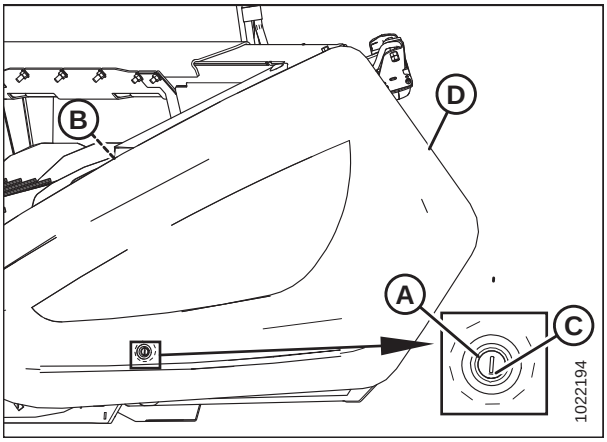

Figure 3.13: Endshield Closed

3.3.5 Removing Right Endshield

To remove the right endshield, follow these steps:

DANGER

To avoid bodily injury or death from unexpected startup of machine, always stop engine and remove key from ignition before leaving operator's seat for any reason.

1. Lower header to ground, shut down engine, and remove key from ignition.

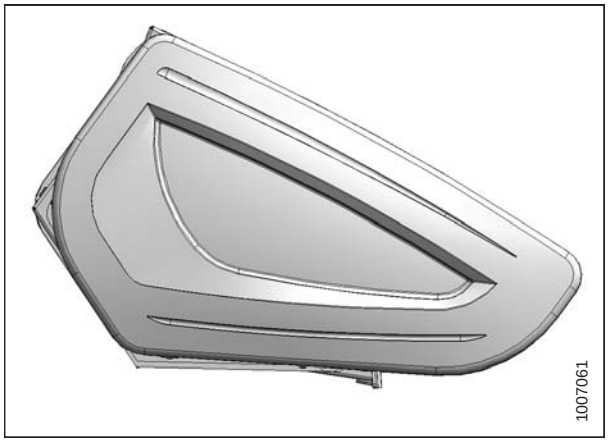

Figure 3.14: Right Endshield

2. Remove nuts and bolts (B) from the lower endshield brackets on the header frame.
3. Remove nuts and bolts (A) from the upper endshield brackets on the header frame.
4. Remove endshield (C) from the header frame.

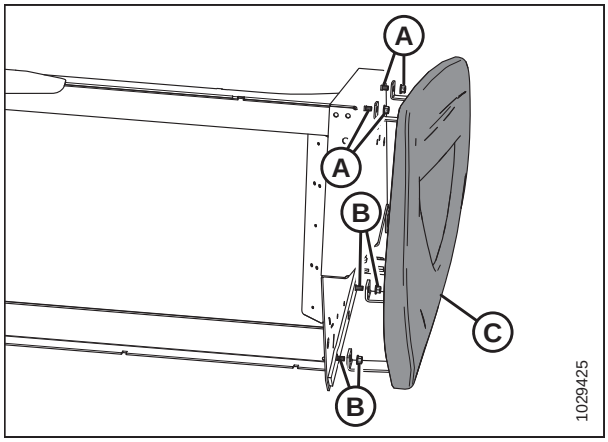

Figure 3.15: Right Endshield

3.3.6 Installing Right Endshield

DANGER

To avoid bodily injury or death from unexpected startup of machine, always stop engine and remove key from ignition before leaving operator's seat for any reason.

1. Lower header to ground, shut down engine, and remove key from ignition.

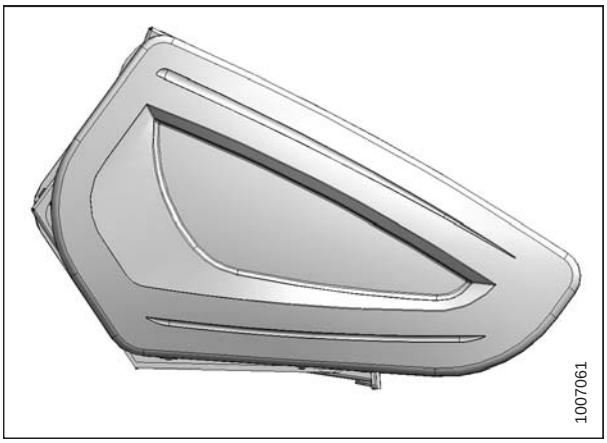

Figure 3.16: Right Endshield

2. Position endshield (C) against the header frame, and install nuts and bolts (B) to attach the upper endshield brackets to the header frame. Do **NOT** tighten the nuts.
3. Install nuts and bolts (A) to attach the lower endshield brackets to frame.
4. Tighten all hardware.

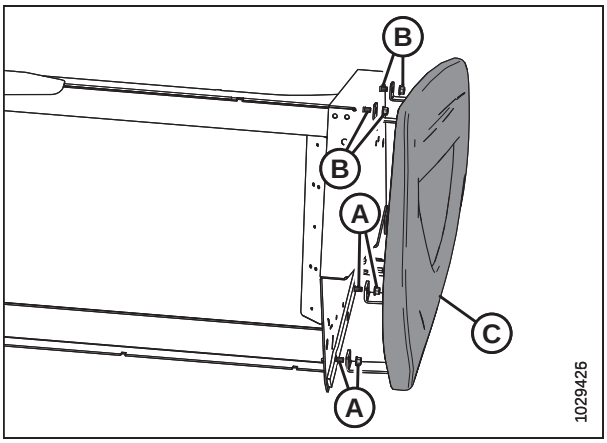

Figure 3.17: Right Endshield

3.4 Header Lift Cylinder Safety Props

Refer to your combine operator's manual.

IMPORTANT:

Always engage combine safety props before working on header in elevated position.

3.5 Engaging Hold-Down Lift Cylinder Safety Props

DANGER

To avoid bodily injury or death from unexpected start-up or fall of a raised machine, always stop engine and remove key before leaving the operator's seat, and always engage safety props before going under the machine for any reason.

NOTE:

John Deere combines use the fore/aft circuit to control the hold-down cylinders.

IMPORTANT:

To prevent damage to hold-down support arms, do **NOT** transport header with cylinder safety props engaged.

1. Raise hold-down (A) to maximum height.

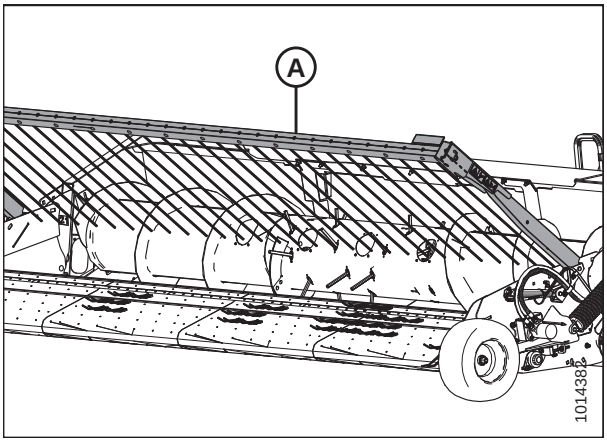

Figure 3.18: Hold-Down in Raised Position

2. Remove retaining pin (A) from safety prop.
3. Raise safety prop (B) to engaged position.
4. Install retaining pin (A) onto safety prop (B).
5. Lower hold-down (C) onto safety prop (B).

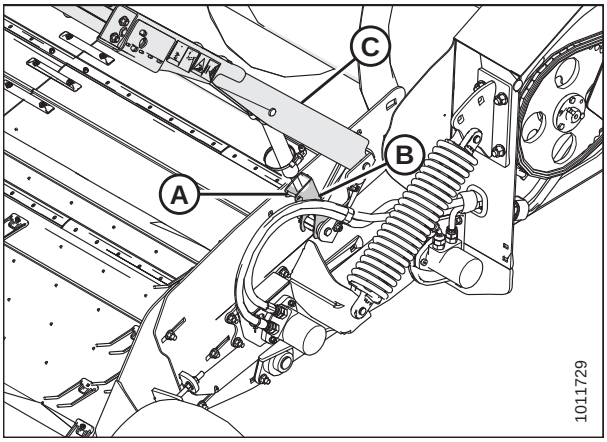

Figure 3.19: Safety Prop Engaged

3.6 Daily Start-Up Check

CAUTION

- **Ensure combine and header are properly attached, all controls are in neutral and combine brake is engaged.**
- **Clear the area of other persons, pets, etc. Keep children away from machinery. Walk around the machine to make sure no one is under, on, or close to it.**
- **Wear close-fitting clothing and protective shoes with slip-resistant soles.**
- **Remove foreign objects from the machine and surrounding area.**
- **Carry with you any protective clothing and personal safety devices that could be necessary through the day. Don't take chances. You may need a hard hat, protective glasses or goggles, heavy gloves, a respirator or filter mask, or wet weather gear.**

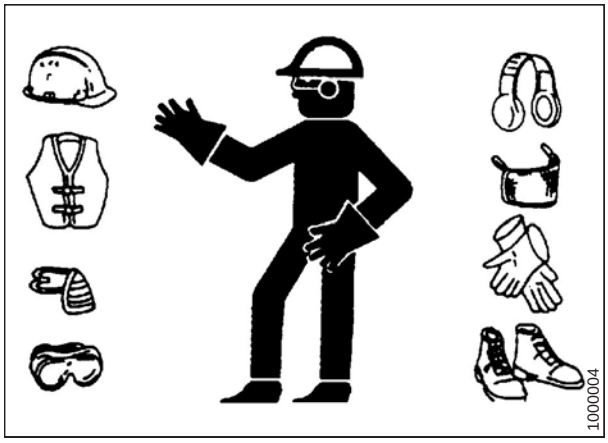

Figure 3.20: Safety Equipment

- **Protect against noise. Wear suitable hearing protection devices such as ear muffs or ear plugs to help protect against objectionable or loud noises.**

Perform the following checks each day before startup:

1. Check the machine for leaks or any parts that are missing, broken, or not working correctly.

   NOTE:

   Use proper procedure when searching for pressurized fluid leaks. Refer to *5.9.5 Hydraulic Hoses and Lines, page 247*.

2. Clean all lights and reflective surfaces on the machine, and check lights for proper operation.
3. Perform all daily maintenance. Refer to *5.2.1 Maintenance Schedule/Record, page 160*.

3.7 Shutting down the Machine

DANGER

To avoid bodily injury or death from unexpected start-up or fall of a raised machine, always stop engine and remove key before leaving the operator's seat, and always engage safety props before going under the machine for any reason.

CAUTION

Never start or move the machine until you are sure all bystanders have cleared the area.

Before leaving the combine seat for any reason, follow this entire procedure:

1. Park on level ground if possible.
2. Lower the header fully.
3. Place all controls in neutral, and engage combine brake.
4. Stop engine and remove key from ignition.
5. Wait for all movement to stop.

3.8 Break-In Period

CAUTION

Before investigating an unusual sound or attempting to correct a problem, shut off engine, engage parking brake, and remove key.

1. After attaching header to combine for the first time, operate the machine at low speed for five minutes while carefully watching and listening **from the operator's seat** for binding or interfering parts.
2. Refer to *5.2.1 Maintenance Schedule/Record, page 160* and perform items listed under heading **10 Hours**.

   NOTE:

   Until you become familiar with the sound and feel of your new header, be extra alert and attentive.

3.9 Changing Header Opening

To minimize setup at the dealership, PW8 Pick-Up Headers are factory-configured to suit a particular combine make, model, and feeder house size. Each header configuration includes the parts and hardware needed to fit a different combine model within the same brand family. Refer to the following chart:

NOTE:

The conversion procedure is included in the Unloading and Assembly Instruction provided with the header.

Table 3.1 Combine Configurations

Factory Header Configuration			Modified Header Configuration	
Combine Make	**Combine Model(s)**	**Feeder House Size**	**Combine Model(s)**	**Feeder House Size**
Case IH	7010, 8010, 7120, 8120, 9120, 7230, 8230, 9230, 7240, 8240, and 9240	137.2 cm (54 in.)	5088, 6088, 7088, 5130, 6130, 7130, 5140, 6140, and 7140	115.6 cm (45-1/2 in.)
John Deere	9660 STS, 9760 STS, 9860 STS, 9670 STS, 9770 STS, 9870 STS, S650, S660, S670, S680, and S690	139.7 cm (55 in.)	9660 WTS and T670	166.4 cm (65-1/2 in.)
New Holland	CR970, CR980, CR9070, CR9080, CR8090, CR9090, CR9090 Elevation, CR8.90, CR9.90, CR9.90 Elevation, and CR10.90 Elevation	127.0 cm (50 in.)	CX840, CX860, CX880, CX8070, CX8080, CX8080 Elevation, CX8090, and CX8090 Elevation	157.5 cm (62 in.)
			CR920, CR940, CR960, CR9020, CR9040, CR9060, CR9065, CR6090, CR7090, CR8080, CR6.90, and CR7.90	101.6 cm (40 in.)
Versatile	RT490	111.8 cm (44 in.)	n/a	n/a

3.10 Header Attachment and Detachment

This section provides instructions for attaching/detaching the PW8 Pick-Up Header to/from the combines listed in Table *3.2, page 42*.

Table 3.2 Attaching PW8 Header to Combine

Combine	Refer to
Case IH	*3.10.1 Case IH, page 42*
John Deere 60, 70, and S Series	*3.10.2 John Deere 60, 70, S, and T Series, page 48*
New Holland CR and CX	*3.10.3 New Holland CR/CX Series Combine, page 56*
Versatile	*3.10.4 Versatile, page 61*

3.10.1 Case IH

This section provides instructions for attaching/detaching the PW8 Pick-Up Header to/from Case IH 50/60/7088, 51/61/7130, 51/61/7140, 70/8010, 71/81/9120, 72/82/9230, and 72/82/9240 combines.

Attaching to Case IH Combine

DANGER

To avoid bodily injury or death from unexpected startup of machine, always stop engine and remove key from ignition before leaving operator's seat for any reason.

1. Pull handle (A) on combine to raise hooks (B) on both sides of the feeder house.

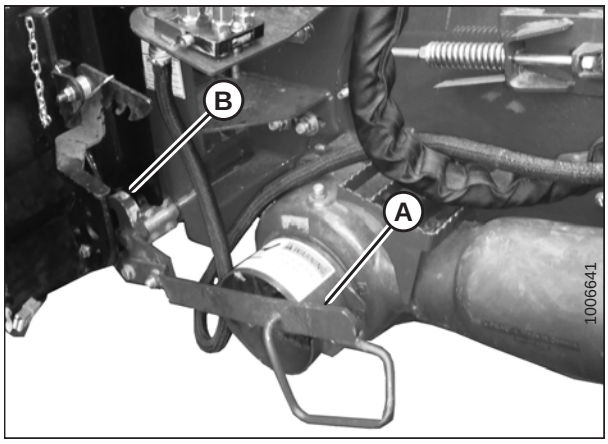

Figure 3.21: Feeder House Locks

2. Drive combine slowly up to header until feeder house saddle (A) is directly under the header top beam (B).
3. Raise feeder house slightly to lift header ensuring feeder house saddle (A) is properly engaged in header frame.
4. Stop engine, and remove key from ignition.

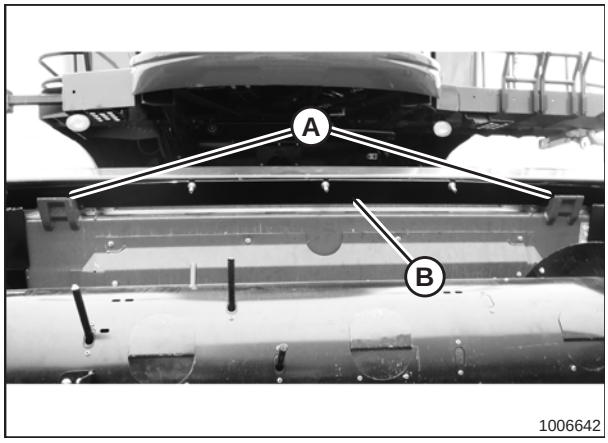

Figure 3.22: Header on Combine

5. Lift lever (A) on header at left side of feeder house and push handle (B) on combine to engage locks (C) on both sides of the feeder house.
6. Push down on lever (A) so that slot in lever engages handle (B) to lock handle in place.
7. If locks (C) do not fully engage the spacer tube and bolt on the header, loosen nut (E) and adjust position of the spacer tube and bolt (D) as necessary (both sides). Tighten nut.
8. Loosen bolts (F) and adjust lock as required to obtain full lock on spacer tube and bolt (D) when lift lever (A) and handle (B) are engaged. Retighten bolts.

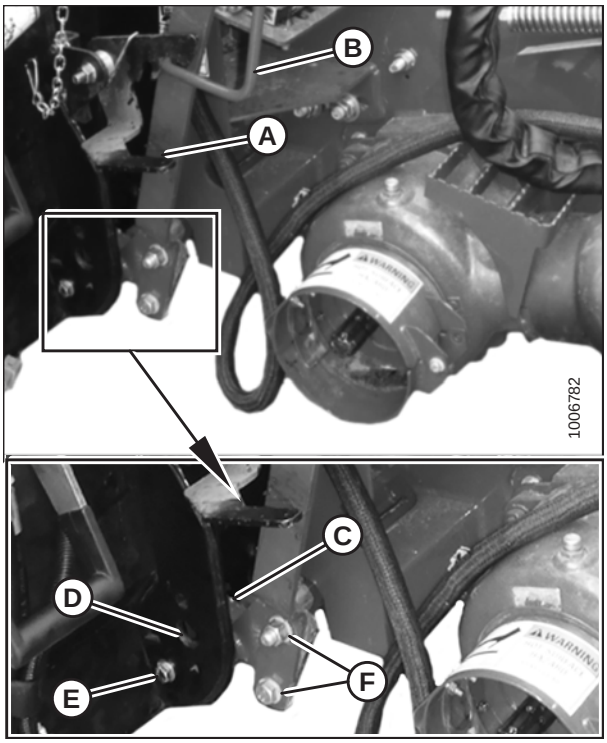

Figure 3.23: Engaging Locks

9. Rotate disc (B) on header driveline storage hook (A) and remove driveline from hook.

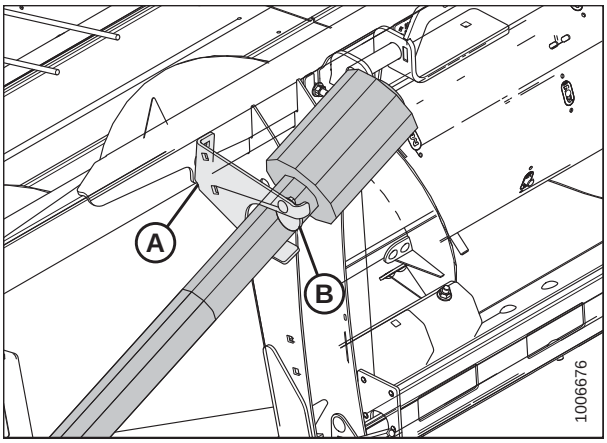

Figure 3.24: Driveline in Storage Position

10. Pull back collar (A) on end of driveline and push onto combine output shaft (B) until collar locks.

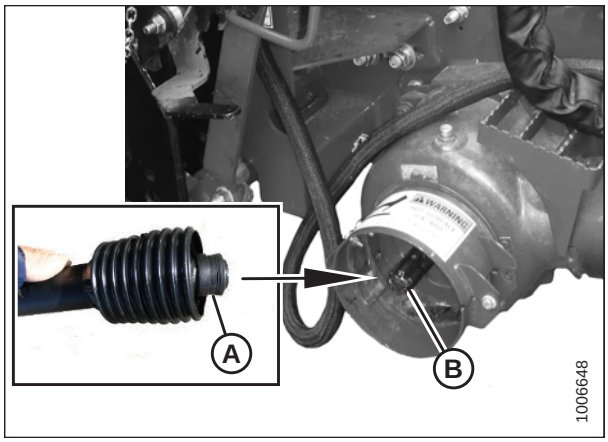

Figure 3.25: Attaching Driveline

11. Open cover (A) on header receptacle.
12. Push in lock button (B) and pull handle (C) upward to fully open position.
13. Remove coupler (D) from combine, and clean mating surfaces.

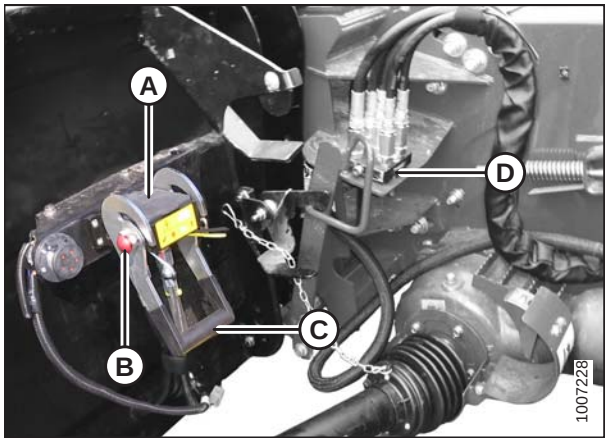

Figure 3.26: Coupler Lock

14. Position coupler (A) onto header receptacle and push handle (B) downward to engage coupler pins in receptacle.
15. Push handle to closed position until lock button (C) snaps out.
16. Open cover (D) on header electrical receptacle.
17. Remove electrical connector (E) from storage cup on combine.
18. Align lugs on electrical connector (E) with slots in receptacle, push connector onto receptacle, and turn collar on connector to lock it in place.

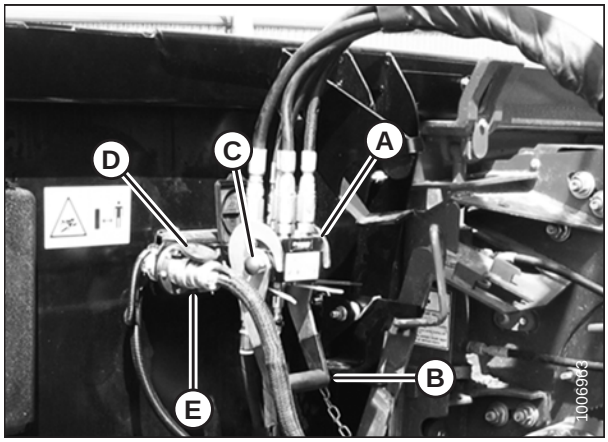

Figure 3.27: Attaching Coupler

Detaching from Case IH Combine

DANGER

To avoid bodily injury or death from unexpected startup of machine, always stop engine and remove key from ignition before leaving operator's seat for any reason.

1. Choose a level area, and position the header slightly off the ground.
2. Stop the engine and remove the key from the ignition.
3. Push in lock button (C), and pull handle (B) upward to release coupler (A).

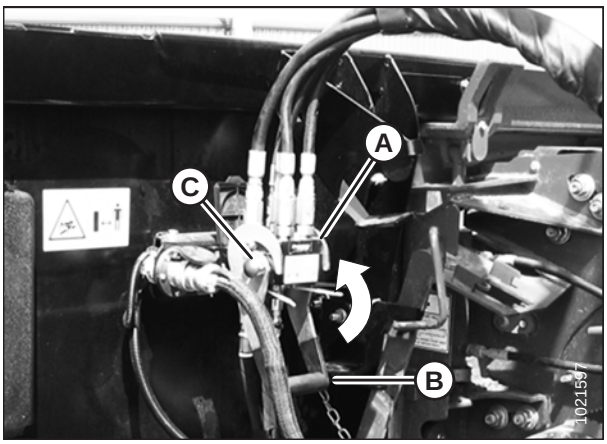

Figure 3.28: Releasing Coupler

4. Position coupler (A) onto storage plate (B) on combine.

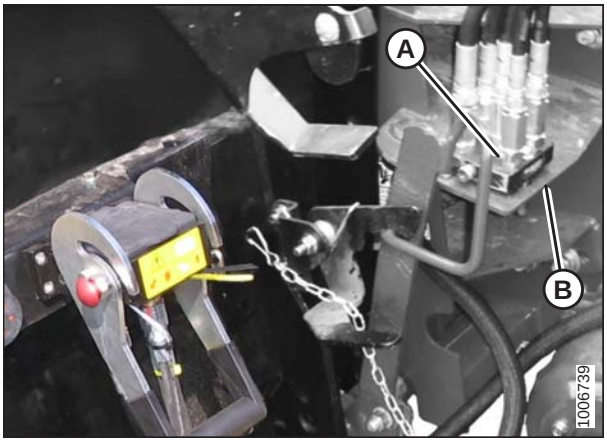

Figure 3.29: Coupler Storage Location

5. Disconnect electrical connector (A) from header.

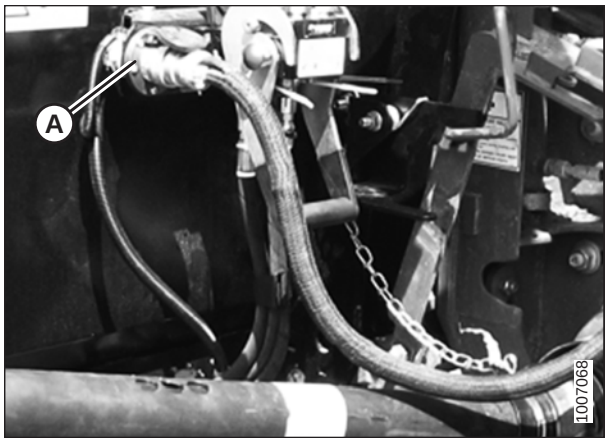

Figure 3.30: Electrical Connector

6. Place electrical connector (A) into storage cup (B) on combine.

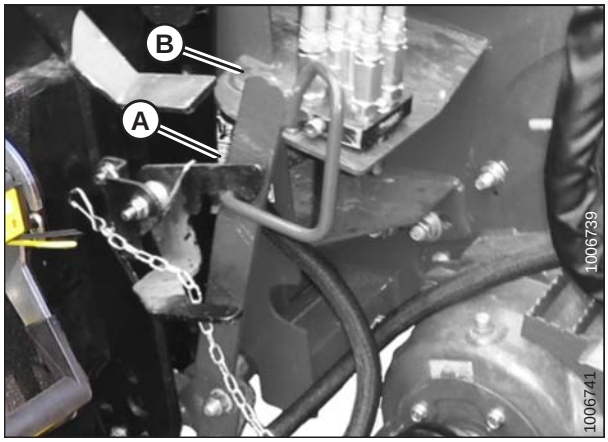

Figure 3.31: Electrical Connector Storage

7. Close cover on header electrical receptacle (A).
8. Push handle (B) on header down into storage position until lock button (C) snaps out.
9. Close cover (D).

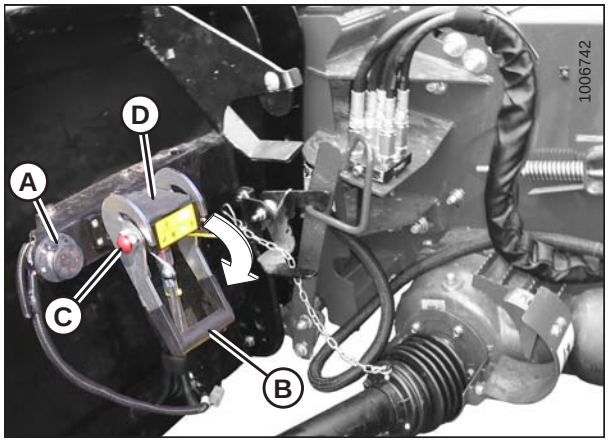

Figure 3.32: Locking Multicoupler

10. Open driveshield (A) on combine.
11. Pull back collar (B) on driveline (C), and remove driveline from combine.

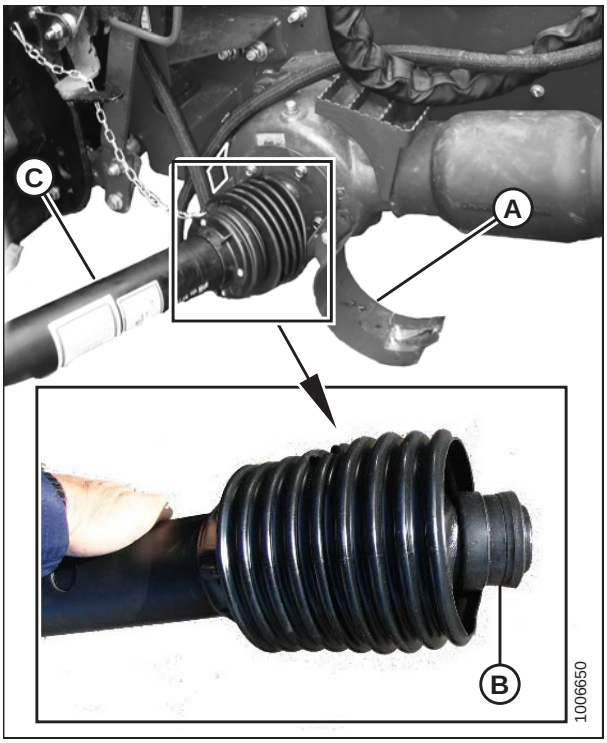

Figure 3.33: Detaching Driveline

12. Slide driveline into storage hook (A) on header and rotate disc (B) to secure driveline.

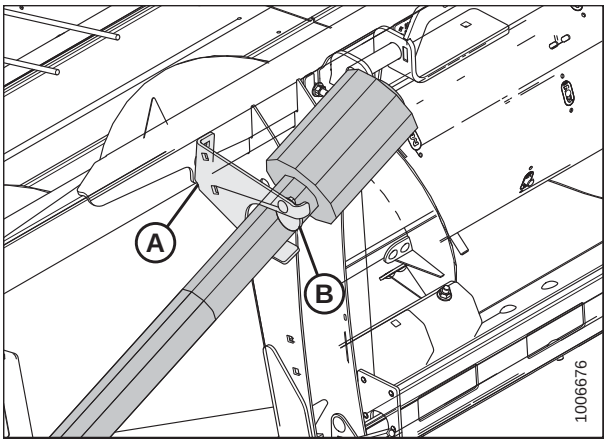

Figure 3.34: Driveline in Storage Position

13. Close driveshield (A) on combine.

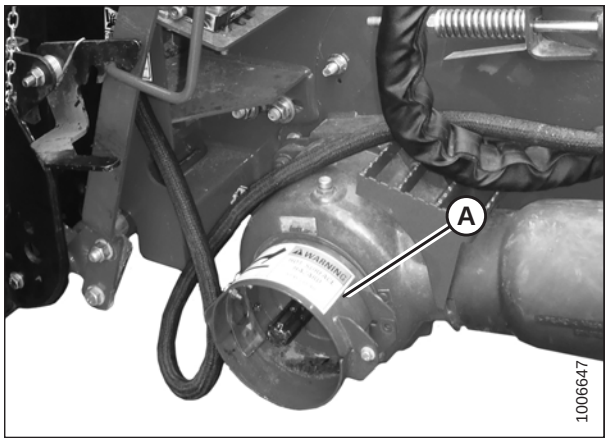

Figure 3.35: Driveshield

14. Lift lever (A) and pull and lower handle (B) to disengage feeder house/header lock (C).
15. Lower feeder house until it disengages from header support.
16. Slowly back combine away from header.

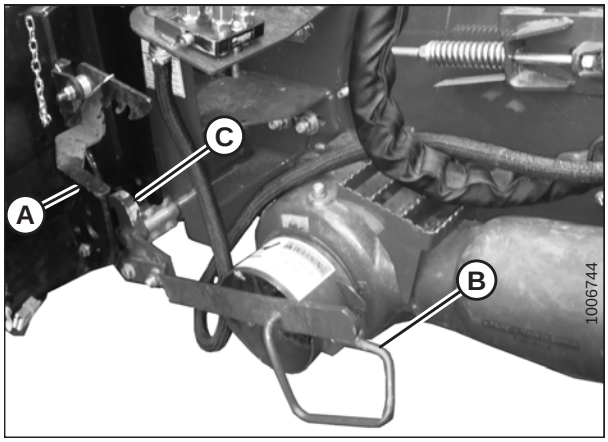

Figure 3.36: Disengaging Header

3.10.2 John Deere 60, 70, S, and T Series

This section provides instructions for attaching/detaching the PW8 Pick-Up Header to/from John Deere 96/97/9860STS, 96/97/9870, S650/660/670/680/690, 9660WTS,and T670 combines.

Attaching to John Deere 60, 70, S, or T Series Combine

DANGER

To avoid bodily injury or death from unexpected startup of machine, always stop engine and remove key from ignition before leaving operator's seat for any reason.

1. Push handle (A) on combine coupler toward feeder house to retract pins (B) at bottom corners of feeder house.

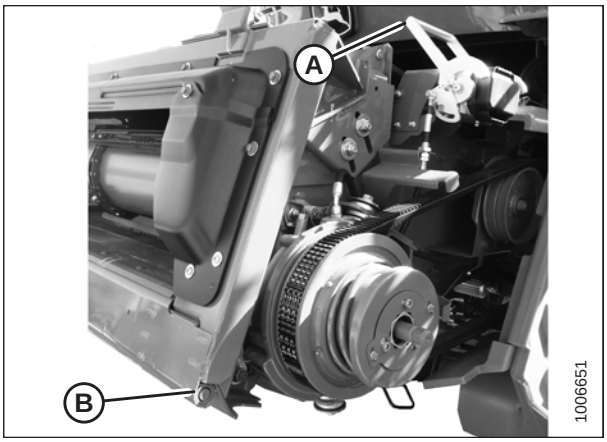

Figure 3.37: Feeder House Locks

2. Drive combine slowly up to header until feeder house saddles (A) are directly under header top beam (B).
3. Raise feeder house to lift header ensuring feeder house saddles (A) are properly engaged in the header frame.
4. Position header slightly off the ground, stop engine, and remove key from ignition.

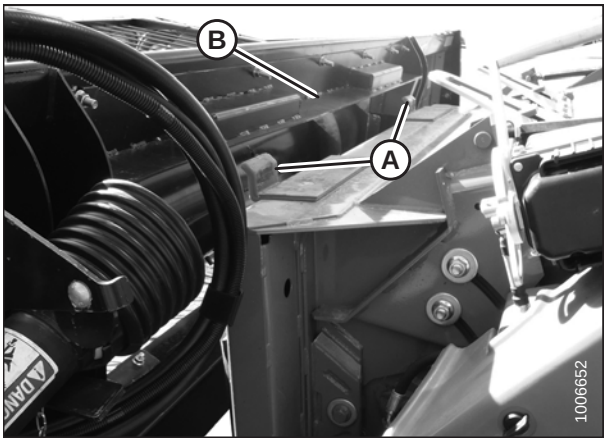

Figure 3.38: Header on Combine

5. Open driveshield (A) on combine feeder house.

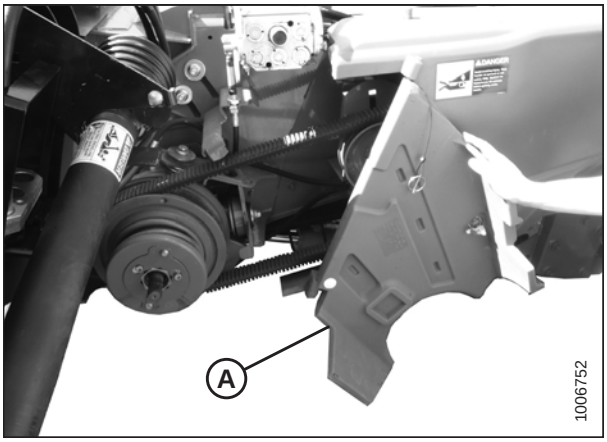

Figure 3.39: Combine Driveshield

6. Rotate disc (B) on header driveline storage hook (A) and remove driveline from hook.

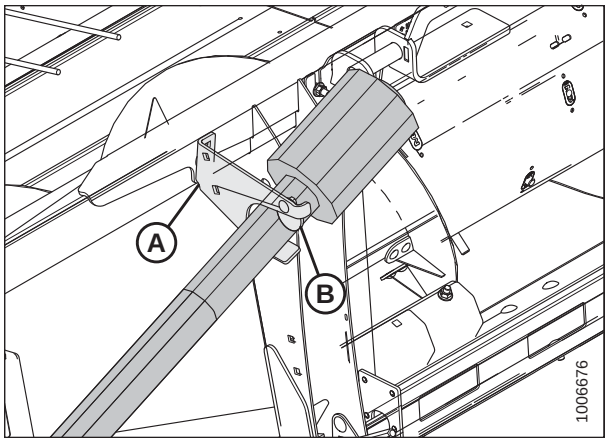

Figure 3.40: Driveline in Storage Position

7. Pull back collar (A) on end of driveline and slide driveline on feeder house driveshaft until the collar locks.
8. Close feeder house driveshield.

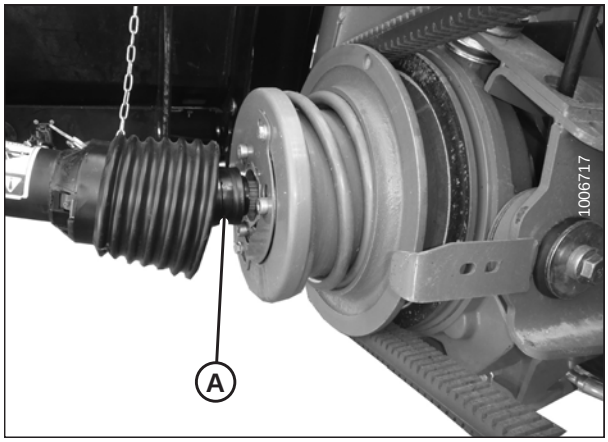

Figure 3.41: Attaching Driveline to Combine

9. Remove cover (A) from combine multicoupler receptacle.

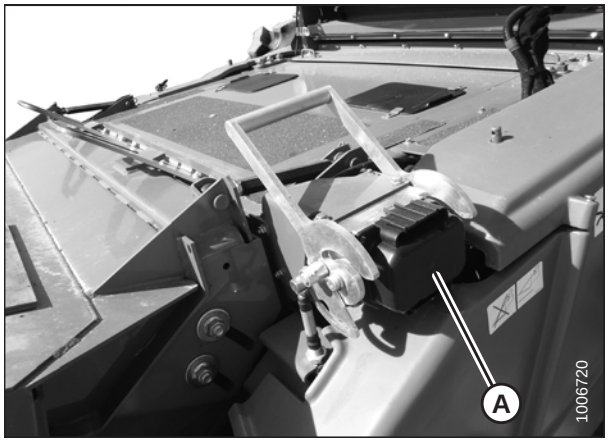

Figure 3.42: Combine Receptacle

10. Pull handle (A) on header to release multicoupler (B) from storage position, remove coupler, and push handle back into header to store.

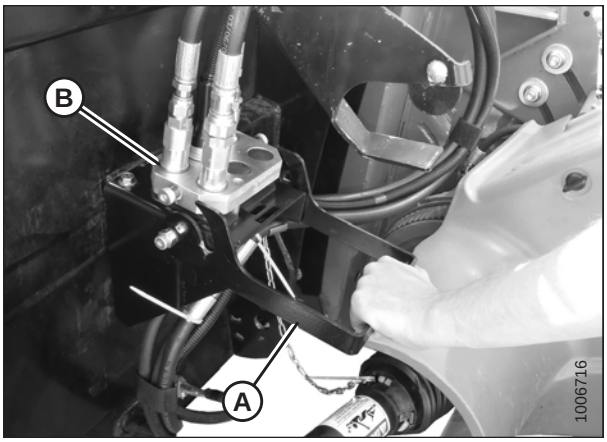

Figure 3.43: Releasing Coupler

11. Place coupler (A) onto combine receptacle.
12. Pull out knob (B) to release handle, and pull handle (C) to engage pins in coupler.

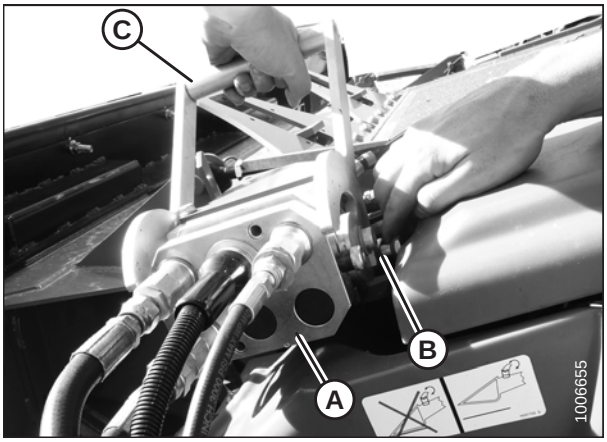

Figure 3.44: Engaging Coupler

13. Pull handle (A) from vertical to fully horizontal position to fully engage multicoupler and to extend pins (B) at the base of the feeder house into locking plates (C). Knob (D) will engage lock handle.

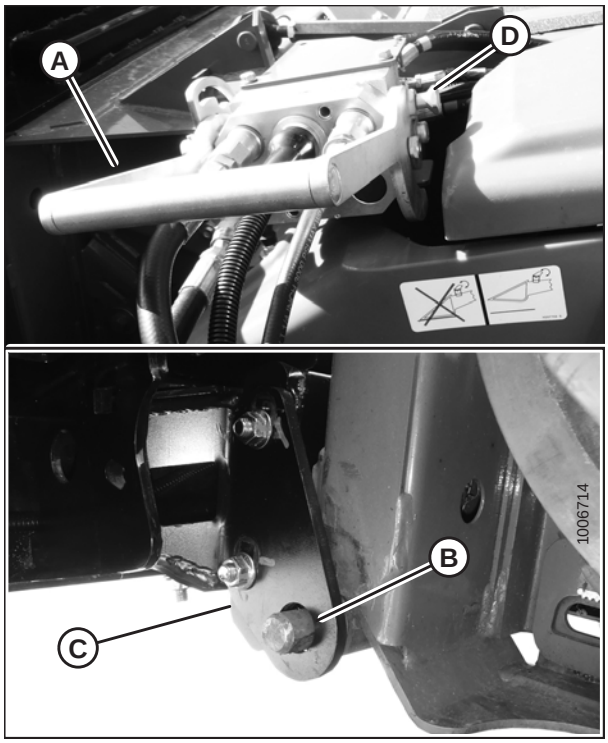

Figure 3.45: Locking Feeder House

NOTE:

If handle does not move to fully horizontal position, check alignment of locking plates (A) on the header with locking pins (B) on both sides of the feeder house. If necessary, loosen nuts (C) and adjust plates (A) to line up with pins (B). Retighten nuts.

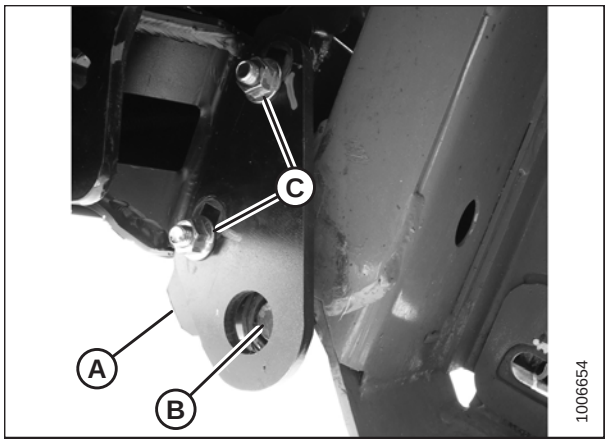

Figure 3.46: Aligning Locking Plates

Detaching from John Deere 60, 70, S, and T Series Combine

DANGER

To avoid bodily injury or death from unexpected startup of machine, always stop engine and remove key from ignition before leaving operator's seat for any reason.

1. Choose a level area, and position the header slightly off the ground.
2. Stop the engine and remove the key from the ignition.
3. Pull out knob (A) on combine multicoupler, and move handle (B) toward feeder house to release coupler (C) from combine and to retract locking pins at base of feeder house.

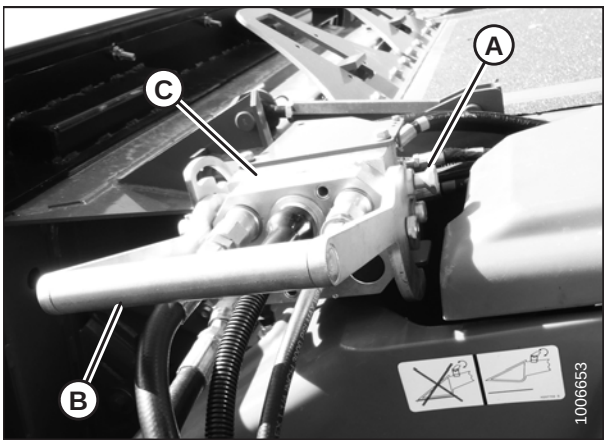

Figure 3.47: Releasing Multicoupler

4. Lower handle (A) on header, and position coupler (B) onto header as shown.

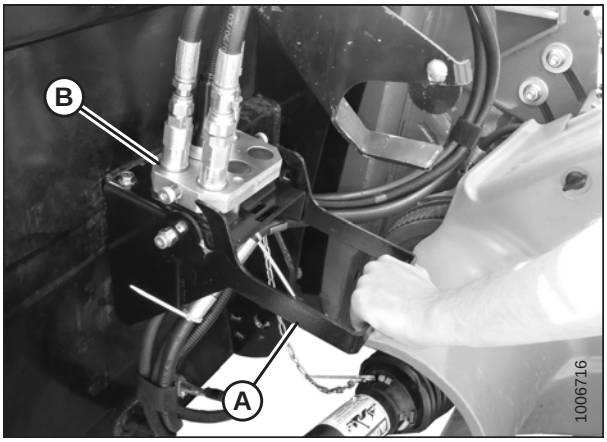

Figure 3.48: Replacing Coupler

5. Raise handle (A) to lock coupler.
6. Open feeder house driveshield (B).

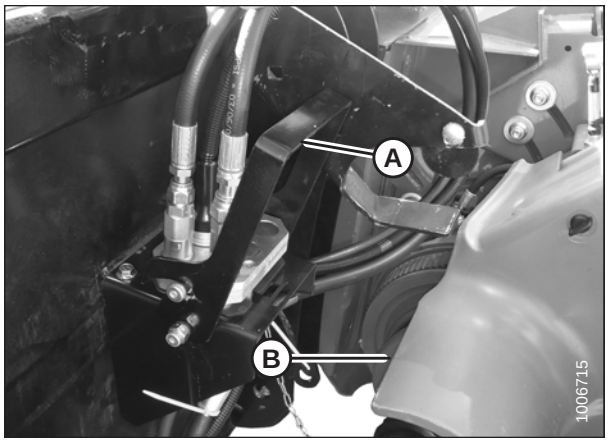

Figure 3.49: Locking Coupler

7. Pull back collar (A) on driveline, and remove driveline from combine output shaft.

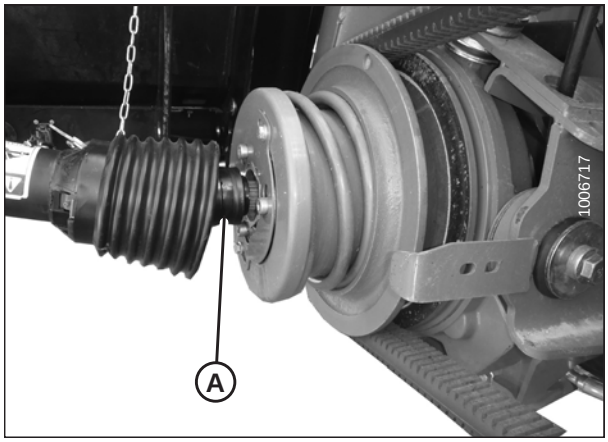

Figure 3.50: Detaching Driveline

8. Slide driveline into storage hook (A) on header and rotate disc (B) to secure driveline.

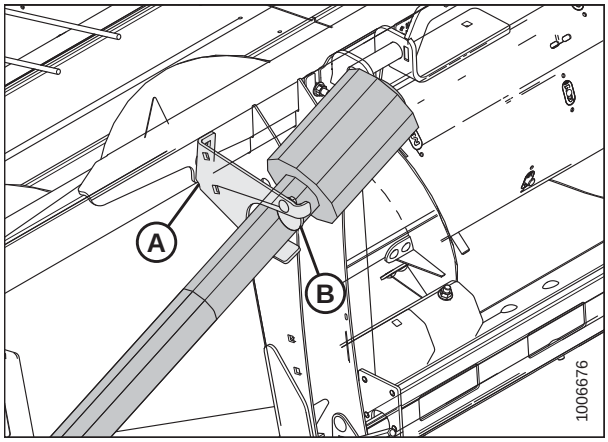

Figure 3.51: Driveline

9. Close combine driveshield (A).
10. Lower feeder house until saddle (B) disengages and clears header top beam (C).
11. Slowly back combine away from header.

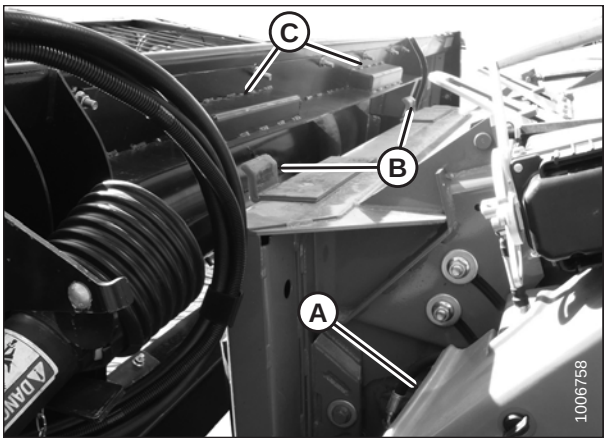

Figure 3.52: Disengaging Header

3.10.3 New Holland CR/CX Series Combine

This section provides instructions for attaching/detaching the PW8 Pick-Up Header to/from all New Holland CR/CX Series combines.

Attaching to New Holland CR/CX Series Combine

DANGER

To avoid bodily injury or death from unexpected startup of machine, always stop engine and remove key from ignition before leaving operator's seat for any reason.

1. Pull handle (A) on combine to raise hooks (B) on both sides of the feeder house.

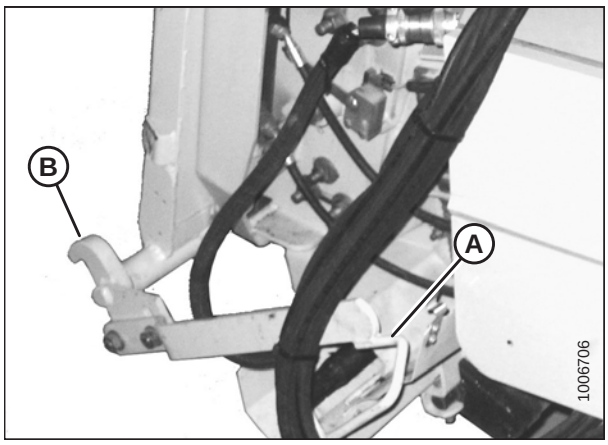

Figure 3.53: Feeder House Locks

2. Drive combine slowly up to header until feeder house saddle (A) is directly under header top beam (B).
3. Raise feeder house to lift header, ensuring feeder house saddle (A) is properly engaged in header frame.

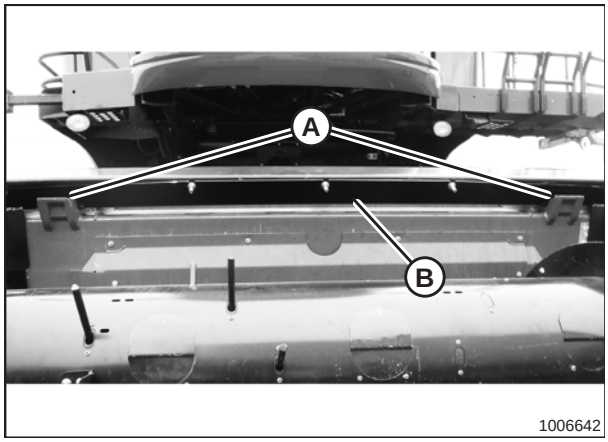

Figure 3.54: Header on Combine

4. Lift lever (A) on header at left side of feeder house and push handle (B) on combine so that hooks (C) engage pins (D) on both sides of the feeder house.
5. Push down on lever (A) so that slot in lever engages handle (B) to lock handle in place.
6. Loosen nut (E) and adjust position of pin (D) as necessary (both sides) if locks (C) do not fully engage pins (D) on header. Tighten nut.
7. Loosen bolts (F) and adjust lock as required to obtain full lock on pin (D) when lift lever (A) and handle (B) are engaged. Retighten bolts.

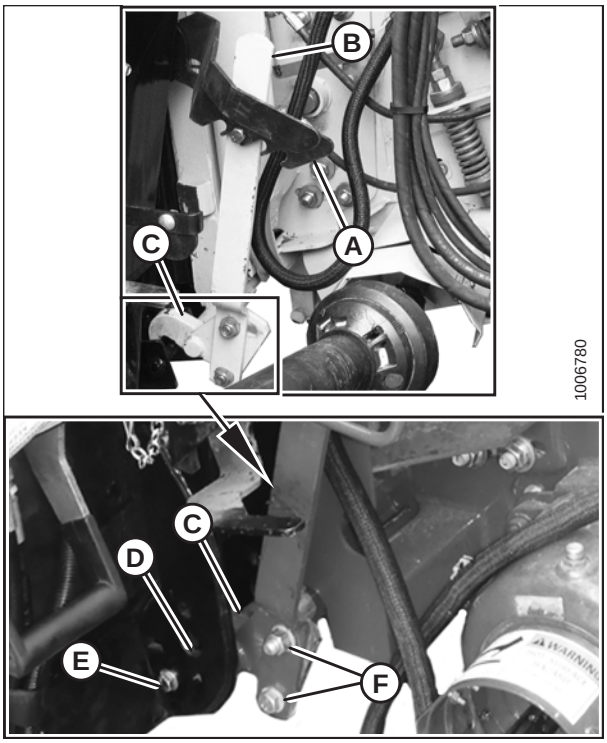

Figure 3.55: Engaging Locks

8. Rotate disc (B) on header driveline storage hook (A) and remove driveline from hook.

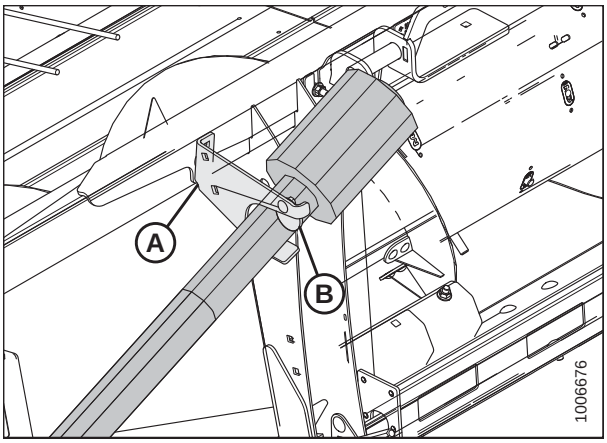

Figure 3.56: Driveline in Storage Position

9. Pull back collar (B) on end of driveline and push onto combine output shaft (A) until collar locks.

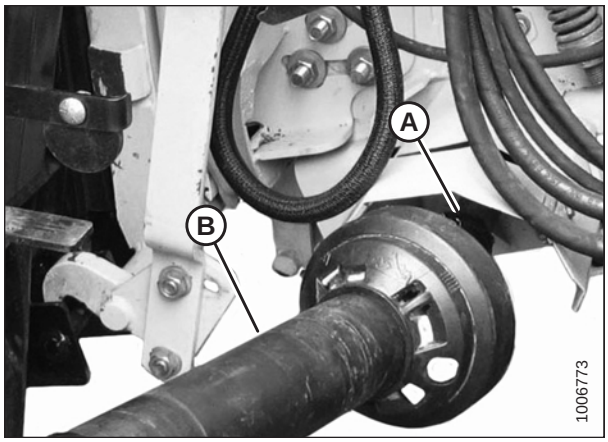

Figure 3.57: Attaching Driveline

10. Open cover (A).
11. Push in lock button (B) and pull handle (C) halfway up to open position.

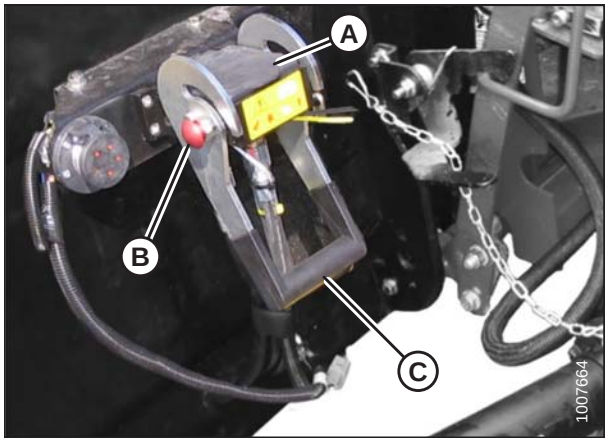

Figure 3.58: Header Receptacle

12. Remove coupler (A) from storage location on combine and clean mating surface of coupler.

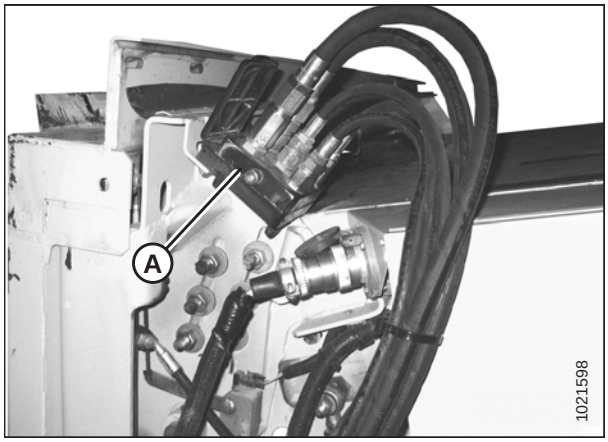

Figure 3.59: Combine Coupler/Connector

13. Position coupler onto header receptacle (A) and push handle (B) downward to engage pins into receptacle.
14. Push handle (B) to closed position until lock button (C) snaps out.
15. Open cover (D) on header electrical receptacle.
16. Remove electrical connector (E) from combine.
17. Align lugs on electrical connector (E) with slots in header receptacle, push connector onto receptacle, and turn collar on connector to lock it in place.

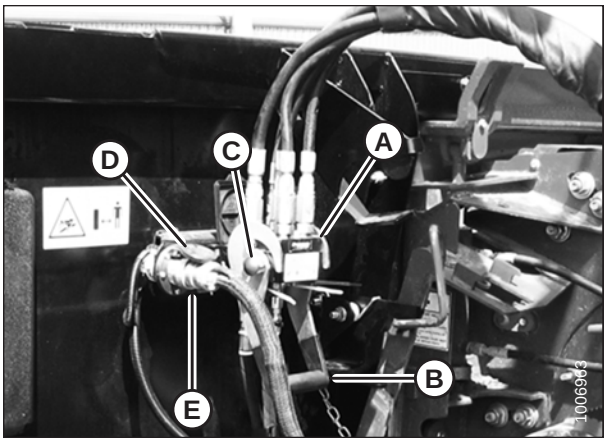

Figure 3.60: Attaching Coupler

Detaching from New Holland CR/CX Combine

DANGER

To avoid bodily injury or death from unexpected startup of machine, always stop engine and remove key from ignition before leaving operator's seat for any reason.

1. Choose a level area, and position the header slightly off the ground.
2. Stop the engine and remove the key from the ignition.
3. Push in lock button (C), and pull handle (B) upward to release coupler (A).
4. Remove coupler (A) from header receptacle.

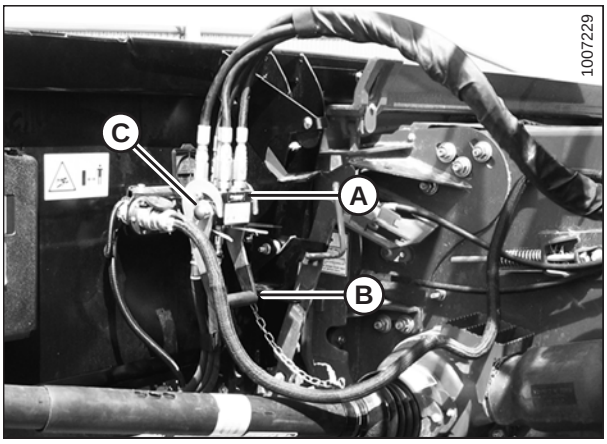

Figure 3.61: Releasing Coupler

5. Position coupler (A) onto storage plate (B) on combine.
6. Disconnect electrical connector from header, and place in storage cup (C) on combine.

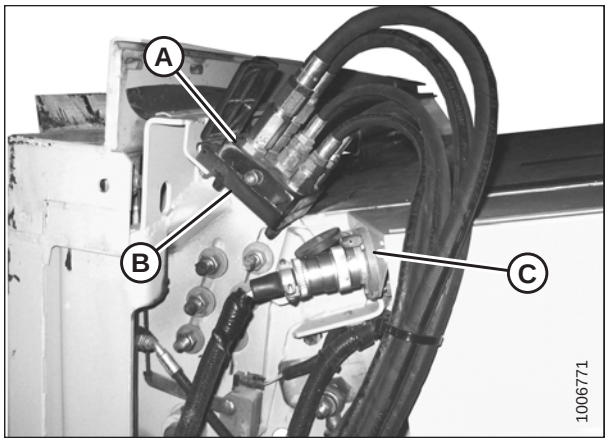

Figure 3.62: Coupler and Electrical Connector Storage Location

7. Close cover (A) on header hydraulic receptacle, and cover (B) on electrical receptacle.
8. Push handle (C) on header down into storage position until lock button (D) snaps out.

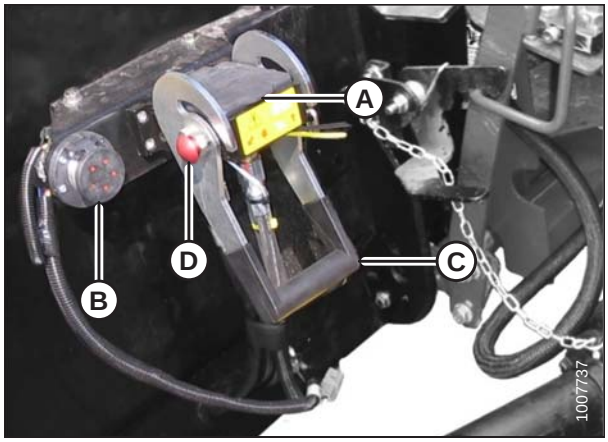

Figure 3.63: Locking Multicoupler

9. Pull back collar (A) on driveline (B) and remove driveline from combine.

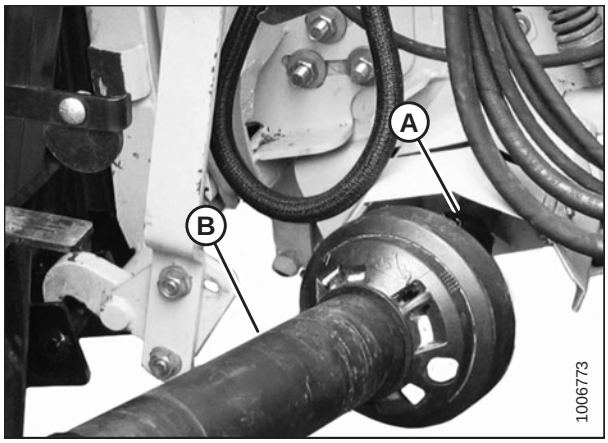

Figure 3.64: Detaching Driveline

10. Slide driveline into storage hook (A) on header and rotate disc (B) to secure driveline.

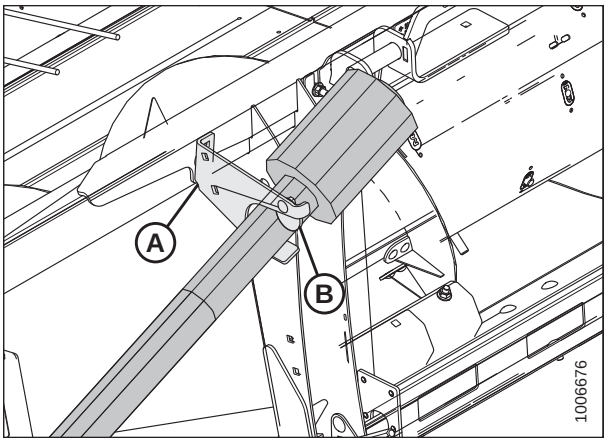

Figure 3.65: Driveline

11. Lift lever (A) and pull and lower handle (B) to disengage feeder house/header lock (C).
12. Lower feeder house until it disengages from header support.
13. Slowly back combine away from header.

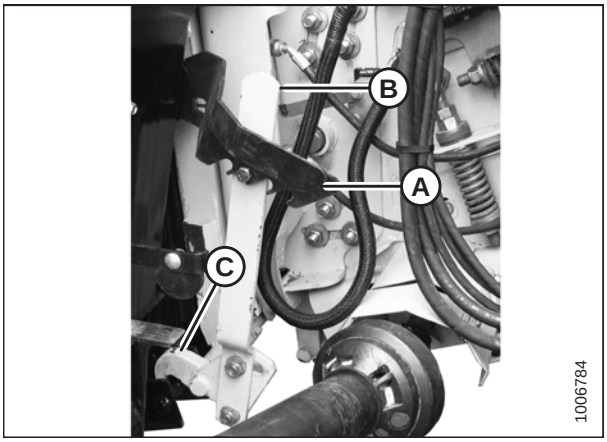

Figure 3.66: Disengaging Header

3.10.4 Versatile

This section provides instructions for attaching/detaching the PW8 Pick-Up Header to/from Versatile RT490 combines.

Attaching to Versatile Combine

DANGER

To avoid bodily injury or death from unexpected startup of machine, always stop engine and remove key from ignition before leaving operator's seat for any reason.

1. Check that pins (A) at lower corners of header opening are retracted.

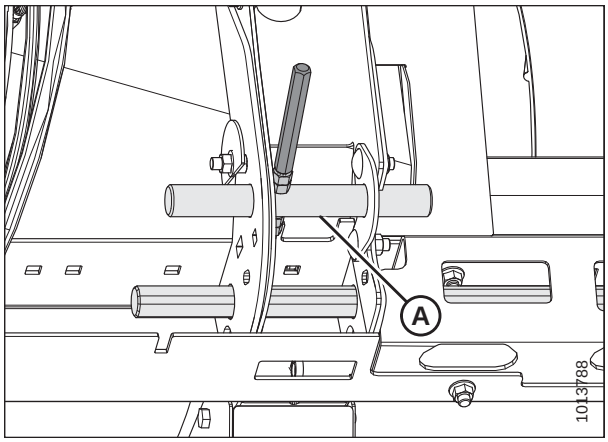

Figure 3.67: Locking Pins Retracted

2. Drive combine slowly up to header until feeder house posts (A) are directly under the header top brackets (B).
3. Raise feeder house to lift header, ensuring posts (A) are properly engaged around header frame (B).
4. Position header slightly off the ground, stop the engine, and remove the key from the ignition.

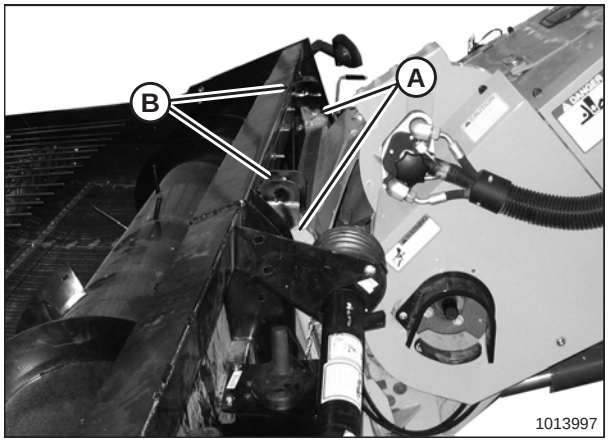

Figure 3.68: Picking up Header

5. Grasp handle (A) and slide pin (B) into feeder house receptacle (C) until pin stop (D) drops down to lock the pin (see inset). Ensure pin is engaged on the opposite side of the feeder house.
6. If pin (B) does not align with feeder house receptacle (C), or if alignment of the header pan and bottom of feeder house opening is unacceptable, reposition the top beam by performing Step *7, page 63* to Step *12, page 64*.

   NOTE:

   If pin aligns with feeder house receptacle (C), proceed to Step *14, page 64*.

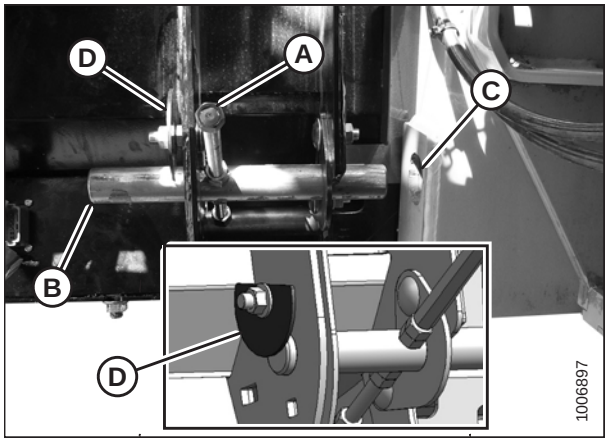

Figure 3.69: Feeder House Lock

7. Measure the misalignment between pin (A) and feeder house receptacle (B).
8. Lower header to the ground until the feeder house disengages the top beam.

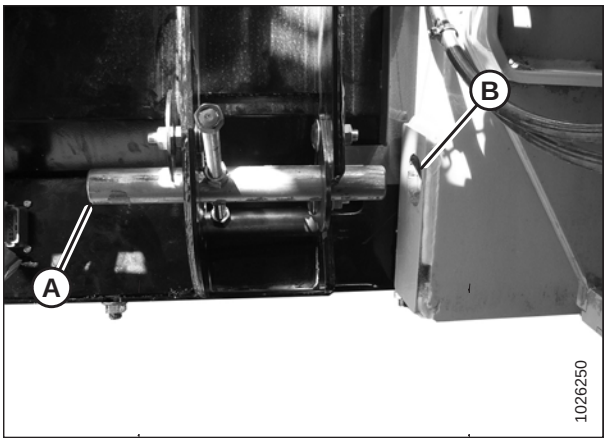

Figure 3.70: Feeder House Lock

9. Loosen the seven bolts (A) along top beam (B) on the auger side of the header.

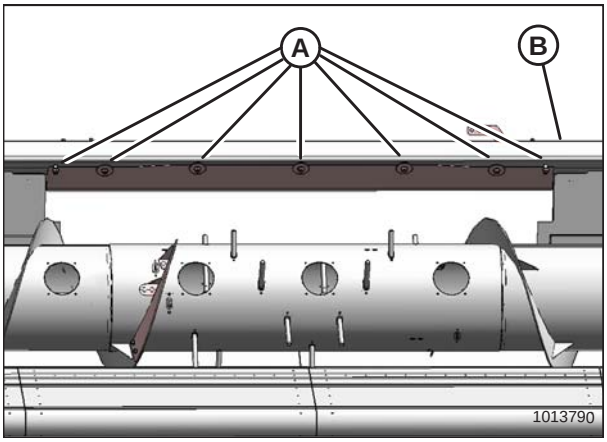

Figure 3.71: Top Beam — Front View

10. Loosen the seven bolts (A) along the top beam (B) on the back side of the header.

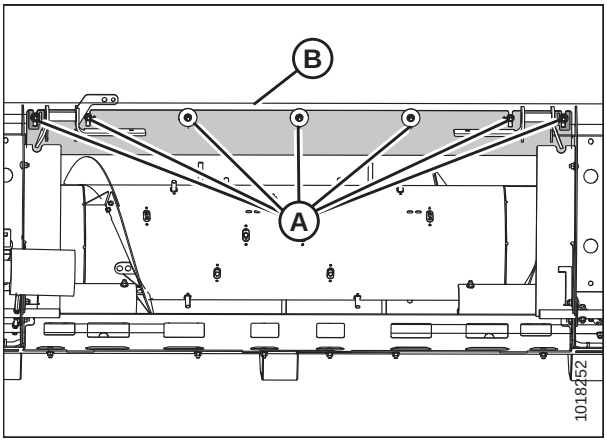

Figure 3.72: Top Beam — Rear View

11. Move support channel (A) according to measurement in Step *7, page 63* to achieve proper alignment of locking pin and feeder house receptacle. Refer to Step *5, page 62*.
12. Tighten all bolts.

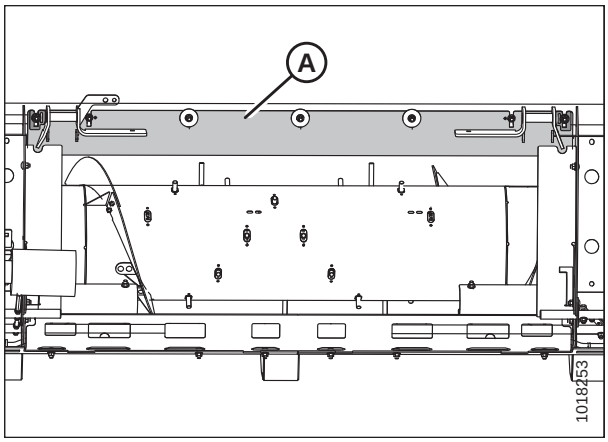

Figure 3.73: Top Beam — Rear View

13. Raise feeder house to lift header, ensuring posts (A) are properly engaged around the header frame (B).

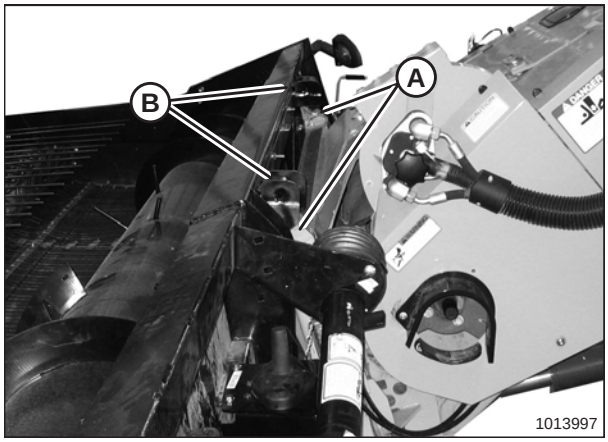

Figure 3.74: Picking up Header

14. Rotate disc (B) on header driveline storage hook (A), and remove the driveline from the hook.

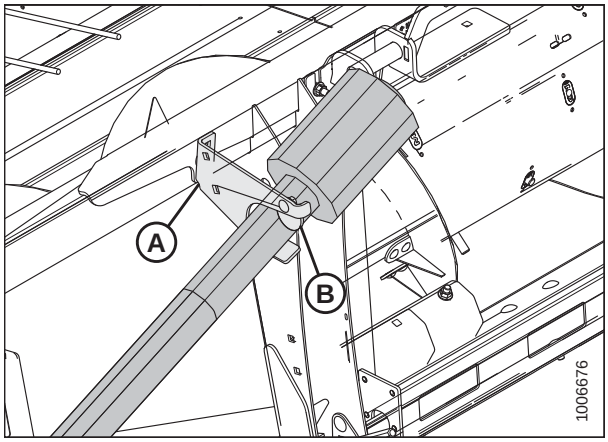

Figure 3.75: Driveline in Storage Position

15. Pull back collar (A) at the end of the driveline and push onto combine output shaft (B) until the collar locks.

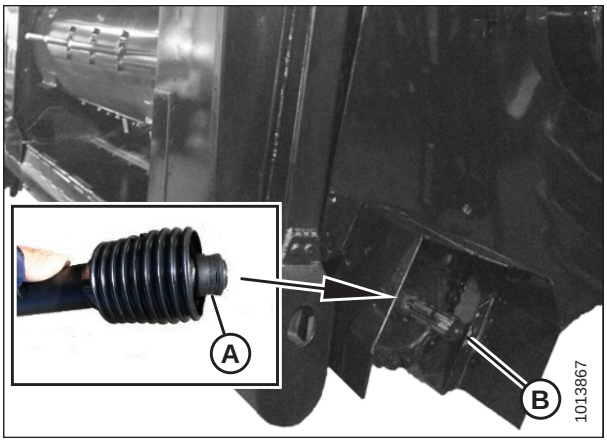

Figure 3.76: Driveline

16. Open cover (A) on header receptacle.
17. Push in lock button (B) and pull handle (C) upward to fully open position.

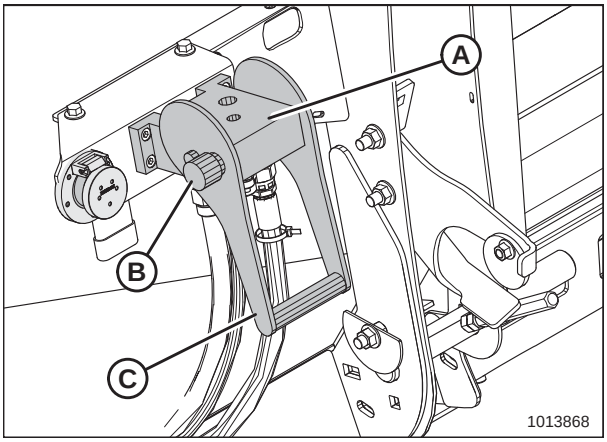

Figure 3.77: Coupler Lock

18. Remove coupler (A) from combine and clean mating surfaces.

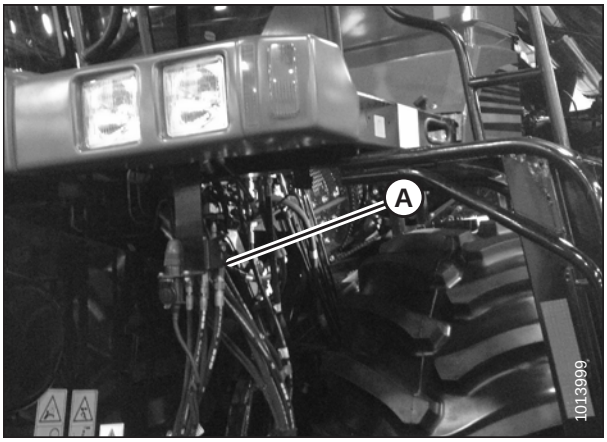

Figure 3.78: Versatile Coupler

19. Position coupler (A) onto header receptacle and push handle (B) downward to engage coupler pins into receptacle.
20. Push handle to closed position until lock button (C) snaps out.
21. Open cover (D) on the header electrical receptacle.
22. Remove electrical connector (E) from the storage cup on combine.
23. Align lugs on electrical connector (E) with slots in the receptacle, push the connector onto the receptacle, and turn the collar on the connector to lock it in place.

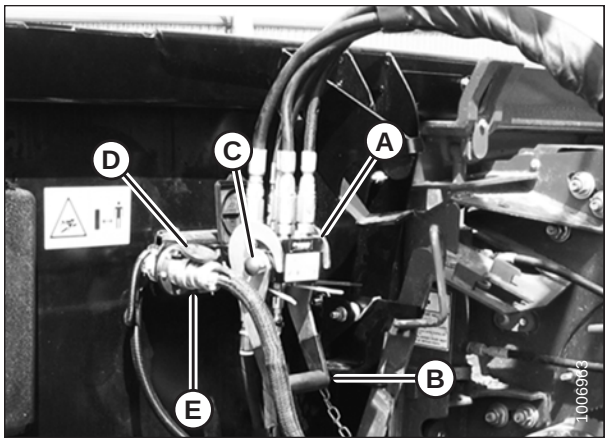

Figure 3.79: Attaching Coupler

Detaching from Versatile Combine

DANGER

To avoid bodily injury or death from unexpected startup of machine, always stop engine and remove key from ignition before leaving operator's seat for any reason.

1. Choose a level area, and position the header slightly off the ground.
2. Stop the engine and remove the key from the ignition.
3. Push in lock button (C), and pull handle (B) upward to release coupler (A).
4. Remove coupler (A) from the header receptacle.

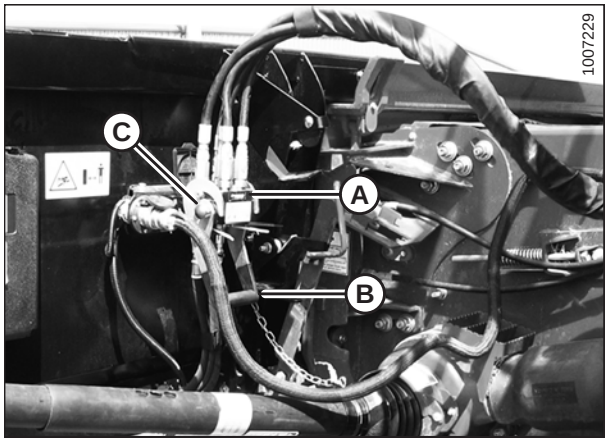

Figure 3.80: Releasing Coupler

5. Position coupler (A) onto storage plate (B) on the combine.
6. Disconnect the electrical connector from the header, and place in storage cup (C) on the combine.

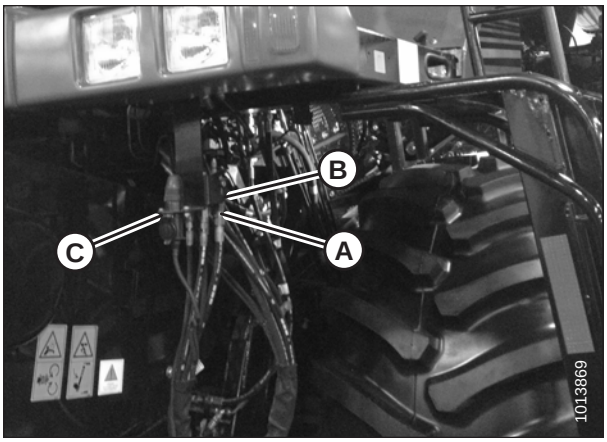

Figure 3.81: Coupler and Electrical Connector Storage Location

7. Close cover (A) on the header hydraulic receptacle, and cover (B) on the electrical receptacle.
8. Push handle (C) on the header down into the storage position until lock button (D) snaps out.

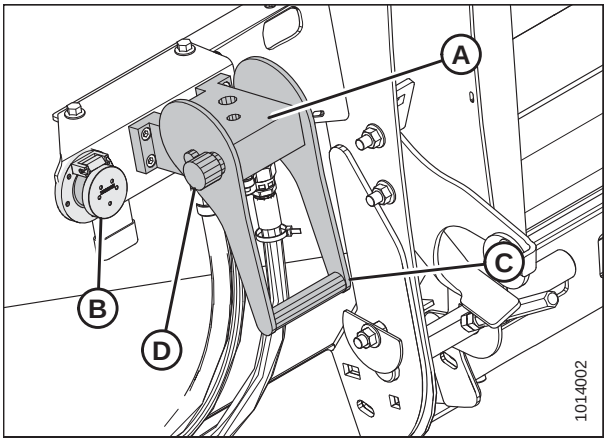

Figure 3.82: Locking Multicoupler

9. Pull back the collar on driveline (A) and remove the driveline from the combine.

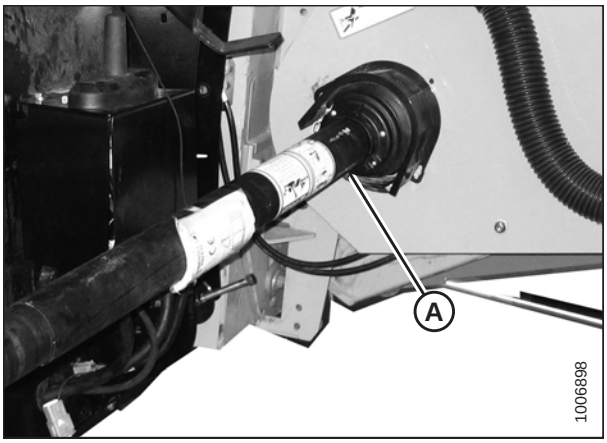

Figure 3.83: Detaching Driveline

10. Slide the driveline into storage hook (A) on the header and rotate disc (B) to secure the driveline.

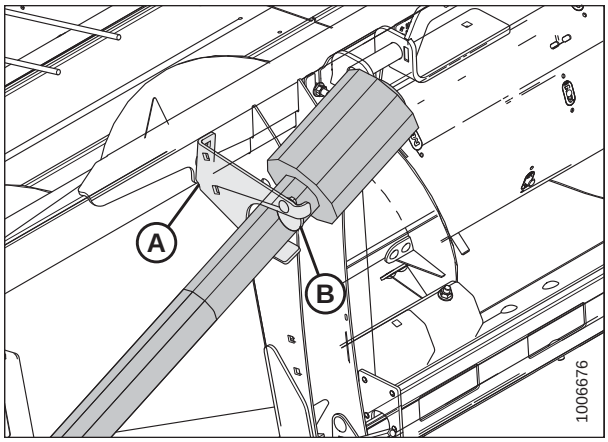

Figure 3.84: Driveline

11. Rotate pin stop (C) from the lowered position (see inset), and disengage pin (B) from the feeder house using handle (A).

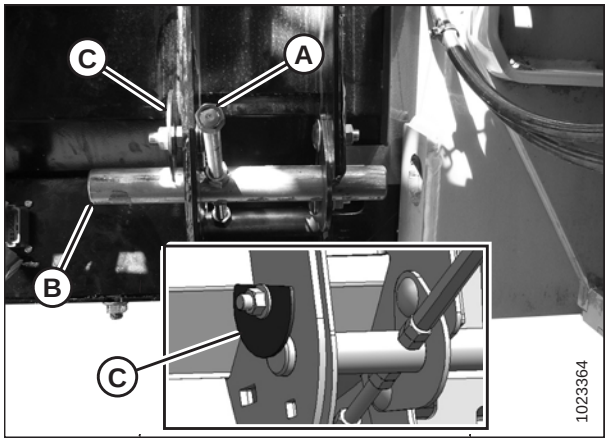

Figure 3.85: Feeder House Lock

12. Start the combine and lower the header to the ground until feeder house posts (A) disengage from the header.
13. Slowly back the combine away from the header.

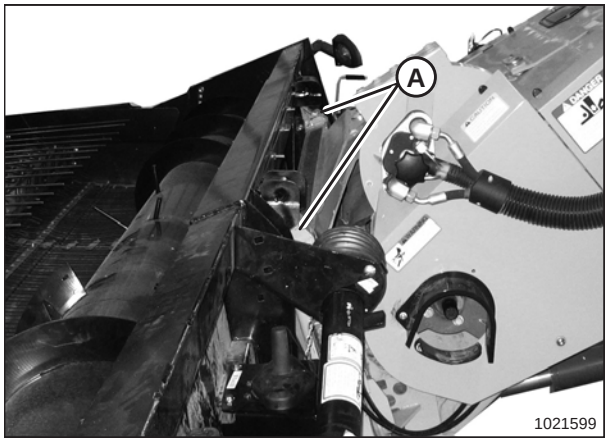

Figure 3.86: Disengaging Header

3.11 Header Transport

Refer to your combine operator's manual for transporting headers when attached to the combine.

3.11.1 Transport Lights

The transport lights (A), which are mounted on both ends of the header, are activated by switches inside the combine cab. They function as flashing amber hazard lights and turn signals, and should be positioned perpendicular to the endsheet.

Refer to your combine operator's manual for operating instructions.

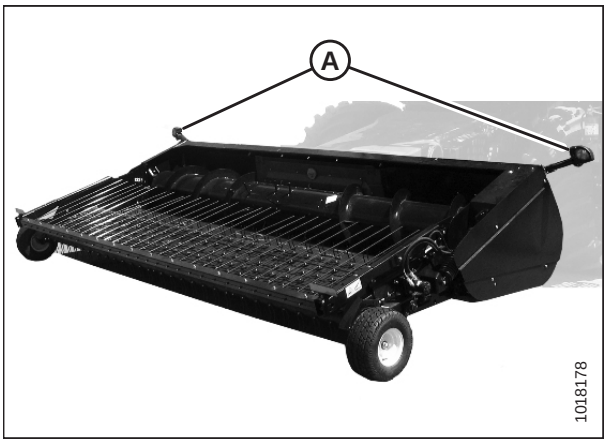

Figure 3.87: Transport Lights

3.12 Header Operation

Satisfactory operation of the header in all situations requires making proper adjustments to suit various crops and conditions.

Proper operation reduces crop loss and increases productivity, and proper adjustments and timely maintenance will increase the length of service you receive from your machine.

The variables listed in Table *3.3, page 70* and detailed on the following pages will affect header performance.

You will quickly become adept at adjusting the machine to achieve the results you desire. Most of the adjustments have been preset at the factory, but the settings can be changed to suit crop conditions.

Table 3.3 Operating Variables

Variable	Refer to
Operating speed	*3.12.1 Operating Speed, page 70*
Auger speed	*Auger Speed, page 72*
Stripper plates	*Stripper Plate Clearance, page 77*
Auger position	*Checking Auger Position, page 72*
Header height	*Header Height, page 78*
Pick-up height	*Pick-Up Height, page 79*
Header flotation	*3.12.4 Adjusting Header Float, page 81*
Hold-down position	*Hold-Down Position, page 83*
Hold-down rod angle	*Adjusting Hold-Down Rod Angle, page 84*
Draper belt tension - front	*Adjusting Front Draper Belt Tension, page 86*
Draper belt tension - rear	*Adjusting Rear Draper Belt Tension, page 88*

3.12.1 Operating Speed

Performance of the pick-up header in various crop and field conditions largely depends upon the speed at which the drapers are turning and the forward speed of the combine.

- If the swath is pushed ahead, the draper speed is too low and some of the crop may remain unpicked.
- If the swath is torn apart and is pulled toward the combine header, the draper speed is too high and uneven combine feeding will occur.

Optimum pick-up speed for most conditions generally results when the swath is always being pushed slightly ahead.

Draper speed is adjusted from the combine cab by regulating oil flow to the pick-up hydraulic motors, typically by using the reel speed controls for the combine. The ratio of pick-up speed to combine ground speed can be set using the combine header controls. Refer to your combine operator’s manual.

IMPORTANT:

Do **NOT** overspeed pick-up. Overspeeding causes premature wear of drive components and adversely affects pick-up performance.

The following operating speed is suggested:

Front and Rear Deck Aft Roller: 51 rpm per 1.6 km/h (1 mph) of combine ground speed.

Example: For combining at 8 km/h (5 mph), the rear roller shaft should run at 51 x (8/1.6) = 255 rpm (51 x 5 mph = 255 rpm).

Adjusting Draper Speed

Draper speed is determined by measuring the rpm of the aft roller on the rear pick-up deck.

1. Check aft roller (A) rpm with a handheld tachometer and adjust with the reel speed control in the combine.

   NOTE:

   Some combines are equipped with a speed sensor (B) that displays the roller rpm inside the combine cab.

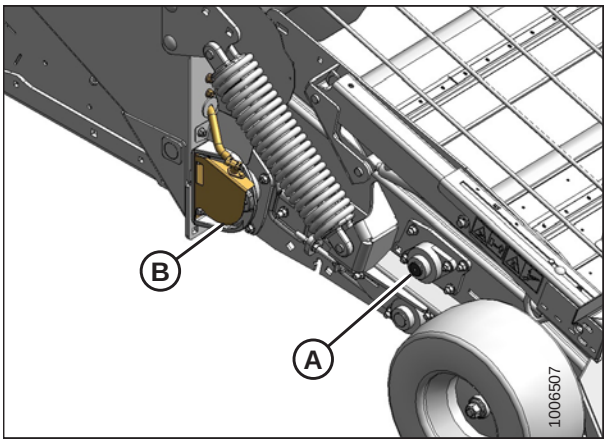

Figure 3.88: Draper Roller and Speed Sensor

3.12.2 Auger Operation

Auger Speed

The header is equipped with an auger drive sprocket to match the combine. The auger is chain-driven by a direct connection to the feeder house, and auger speed depends on the feeder house speed. You can adjust auger speeds from the combine to suit crop conditions. Contact your Dealer for available sprocket options.

Refer to *Auger Drive Sprockets, page 189* for instructions on changing the sprocket.

Checking Auger Position

The auger position is critical for a smooth, high-capacity flow of crop into the feeder house. It is factory-set for normal crop conditions, but it may require adjustment for different crops and conditions. Check the auger position prior to operating the pick-up header to ensure the auger rotates freely without touching the auger pan or stripper bars.

1. Ensure clearance (A) between auger flighting (B) and pan (C) is 5–14 mm (3/16–9/16 in.).

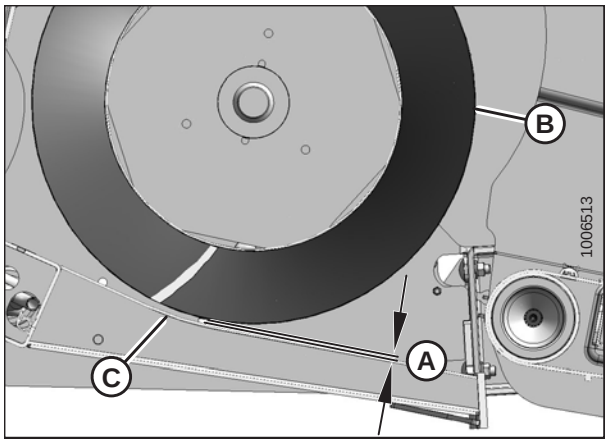

Figure 3.89: Clearance between Auger and Pan

2. Ensure clearance (A) between auger fingers (B) and pan (C) is 20–25 mm (13/16–1 in.).

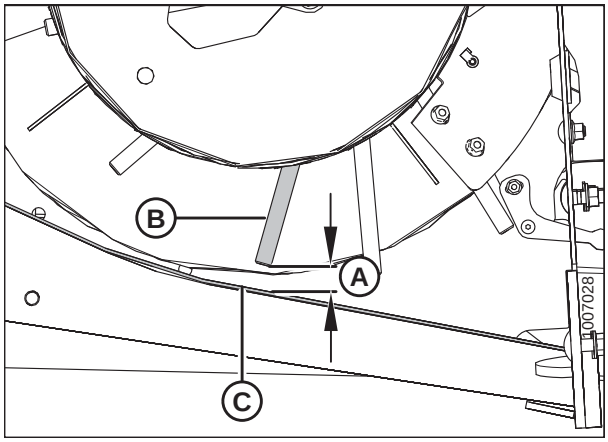

Figure 3.90: Clearance between Finger and Pan

Adjusting Auger Position

The auger is adjustable on both ends in order to maintain uniform clearance across the entire width of the header.

DANGER

To avoid bodily injury or death from unexpected startup of machine, always stop engine and remove key from ignition before leaving operator's seat for any reason.

1. Lower header to the ground, shut down combine, and remove key from ignition.

   NOTE:

   Access the auger/pan area from the top of the header.

   Open left endshield (A). Refer to *3.3.1 Opening Left Endshield, page 29*.

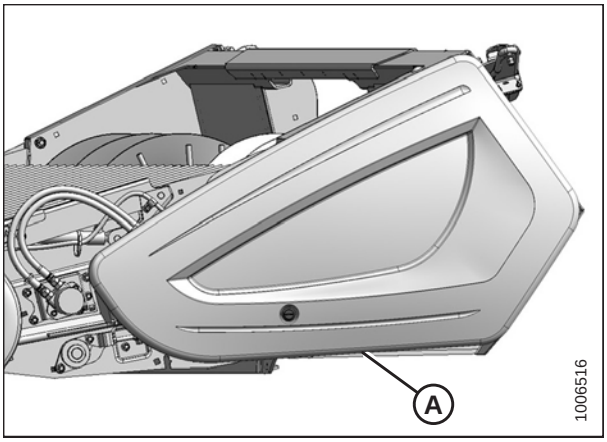

Figure 3.91: Left Endshield

2. Loosen two nuts (A) on auger stops at both ends of header.
3. Loosen jam nuts (B) on adjuster bolts (C).
4. Turn adjuster bolt (C) to raise or lower auger.
5. Manually rotate the auger to check for interference and to check clearance between the auger flighting and auger pan. Adjust if necessary.
6. Tighten jam nuts (B) and downstop nuts (A).
7. Check clearance between auger flighting and stripper plates and adjust if necessary. Refer to *Stripper Plate Clearance, page 77*.

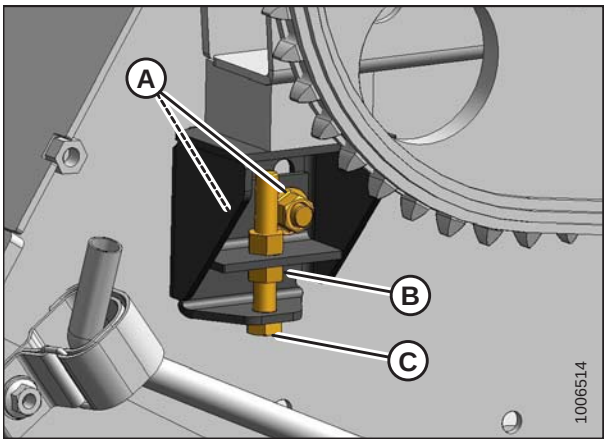

Figure 3.92: Left Side Auger Stop

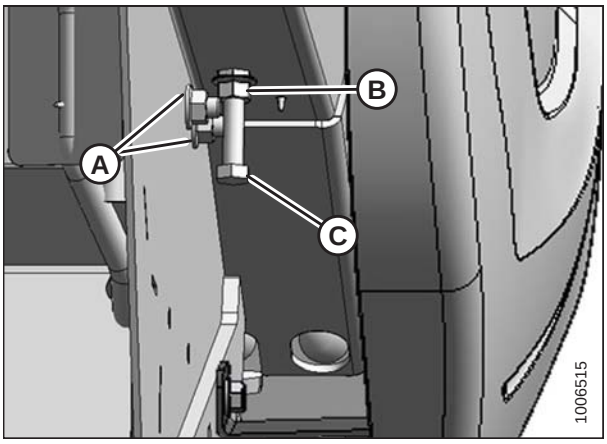

Figure 3.93: Right Side Auger Stop

Auger Float

The auger has an upward float range of 74 mm (3 in.), but it can be locked to operate in rigid-header mode.

Locking Auger Float

DANGER

To avoid bodily injury or death from unexpected startup of machine, always stop engine and remove key from ignition before leaving operator's seat for any reason.

1. Lower the header to the ground, shut down the combine, and remove the key from the ignition.
2. Open left endshield (A). Refer to *3.3.1 Opening Left Endshield, page 29*.

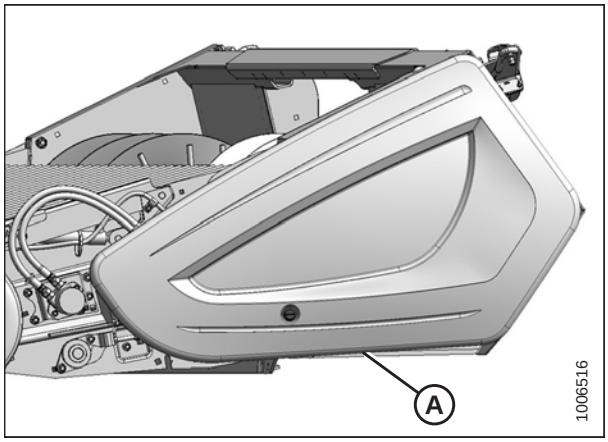

Figure 3.94: Left Endshield

3. Loosen two bolts (A) on auger upstops (B) at the left side of header.
4. Slide stops (B) downwards until they contact the rubber blocks (C) on the auger arm.
5. Tighten bolts (A).

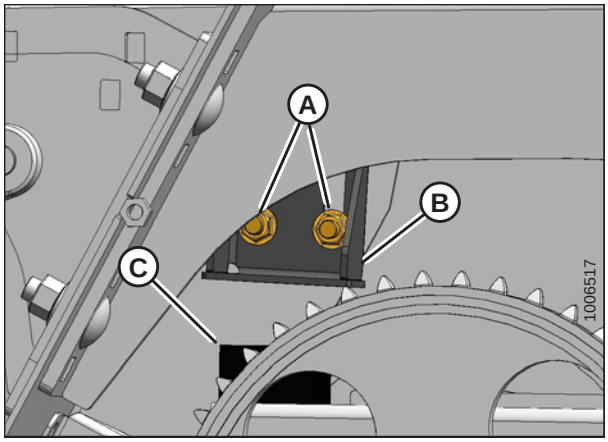

Figure 3.95: Left Stop

6. Loosen two bolts (A) on auger upstops (B) at the right side of header.
7. Slide the stops (B) downwards until they contact the rubber blocks (C) on the auger arm.
8. Tighten bolts (A).

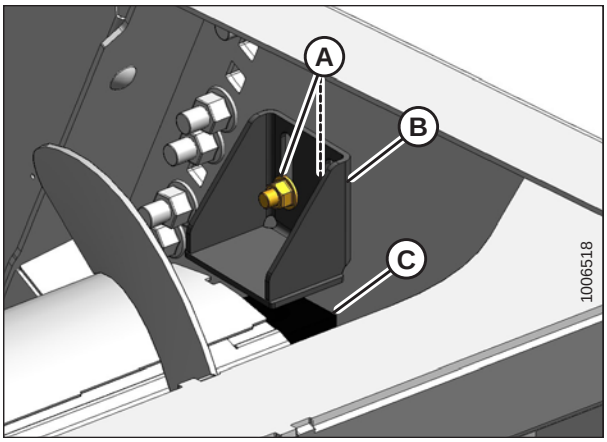

Figure 3.96: Right Stop

9. Close left endshield (A). Refer to *3.3.2 Closing Left Endshield, page 30*.

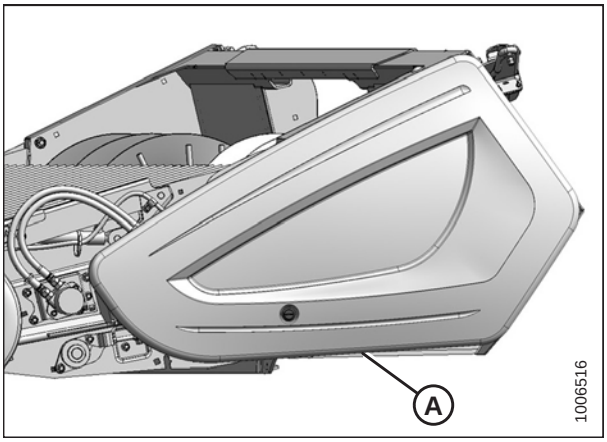

Figure 3.97: Left Endshield

Unlocking Auger Float

DANGER

To avoid bodily injury or death from unexpected startup of machine, always stop engine and remove key from ignition before leaving operator's seat for any reason.

1. Lower the header to the ground, shut down the combine, and remove the key from the ignition.
2. Open left endshield (A). Refer to *3.3.1 Opening Left Endshield, page 29*.

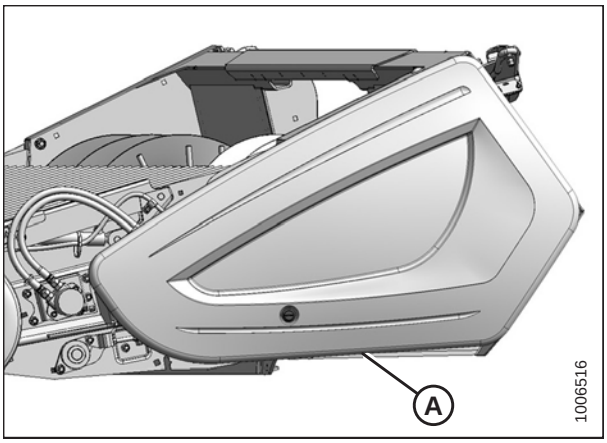

Figure 3.98: Left Endshield

3. Loosen two bolts (A) on auger upstops (B) at the left side of header.
4. Slide stops (C) upwards to desired float range.
5. Tighten bolts (A).

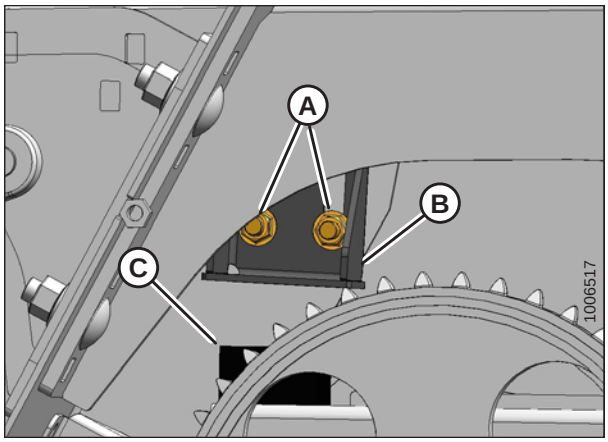

Figure 3.99: Left Stop

6. Loosen two bolts (A) on auger upstops (B) at the right side of header.
7. Slide stops (C) upwards to desired float range.
8. Tighten bolts (A).

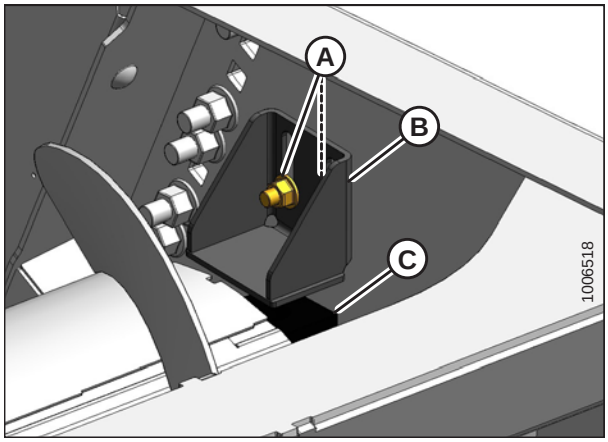

Figure 3.100: Right Stop

9. Close left endshield (A). Refer to *3.3.2 Closing Left Endshield, page 30*.

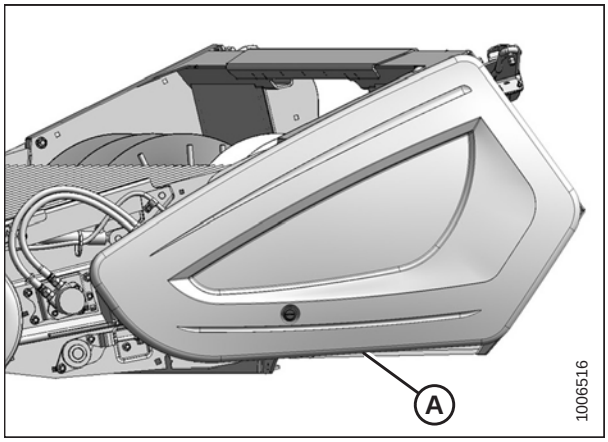

Figure 3.101: Left Endshield

Stripper Plate Clearance

The header is equipped with a pair of stripper plates (A) located on either side of the center opening. The stripper plates are designed to minimize crop carryover behind the auger, but they require proper adjustment.

Stripper plate clearance is factory-set to 3–8 mm (1/8–5/16 in.).

NOTE:

- If the clearance between the flighting and stripper plates is too large, crop has a tendency to wrap around the auger and disrupt the crop flow into the combine.
- If the clearance is too little, the auger flighting may contact the stripper plates and cause excessive wear to the flighting and stripper plates.

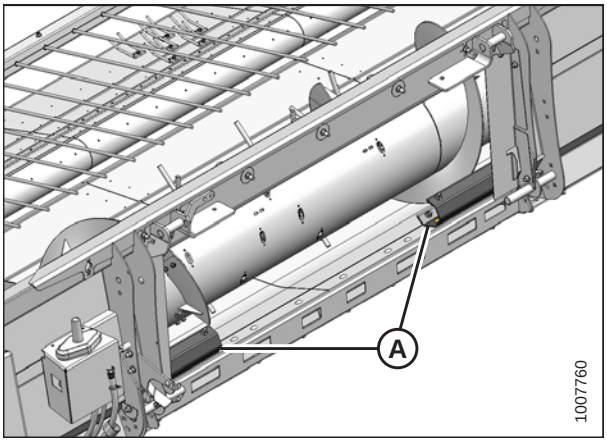

Figure 3.102: Stripper Plates

Checking Stripper Plate Clearance

Check the stripper plate clearance whenever the auger position is changed, and adjust if necessary.

DANGER

To avoid bodily injury or death from unexpected startup of machine, always stop engine and remove key from ignition before leaving operator's seat for any reason.

1. Lower the header to the ground, shut down the combine, and remove the key from the ignition.
2. Rotate the auger manually to check for interference and to check the clearance between the auger flighting (A) and stripper plates (B).

   NOTE:

   Access the auger/stripper plate area from the top of the header.

3. Run the header slowly, and listen for contact between auger flighting (A) and stripper plates (B). Gradually increase speed until the header is at full speed. If there is contact between the auger flighting and the stripper plates, adjust the stripper plate clearance. Refer to *Adjusting Stripper Plate Clearance, page 78*.

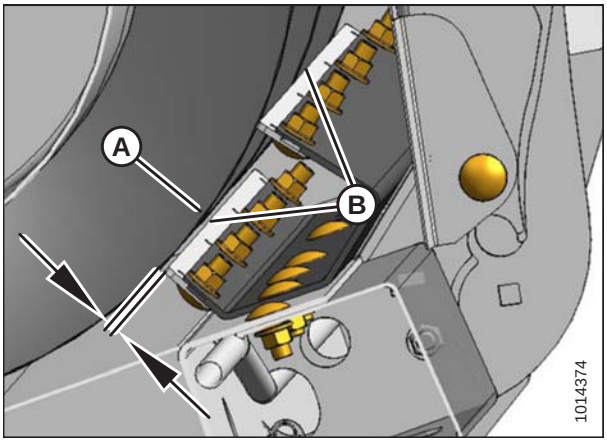

Figure 3.103: Stripper Plate Clearance

Adjusting Stripper Plate Clearance

1. Loosen nuts (A) on stripper plate (B), and adjust the stripper plate to achieve clearance (C) of 3–8 mm (1/8–5/16 in.).
2. Tighten nuts (A).
3. Recheck clearance.

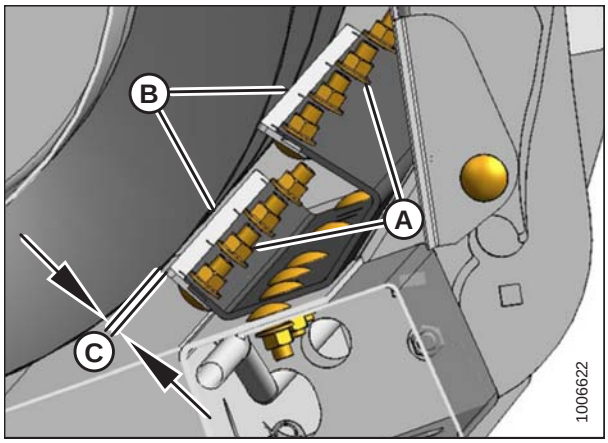

Figure 3.104: Stripper Plate Clearance

3.12.3 Operating Height

Header Height

Header height is the distance between the deck pivot and the ground. Recommended operating height (A) is between 4 and 5 on the end plate decal or 305 mm (12 in.) above the ground.

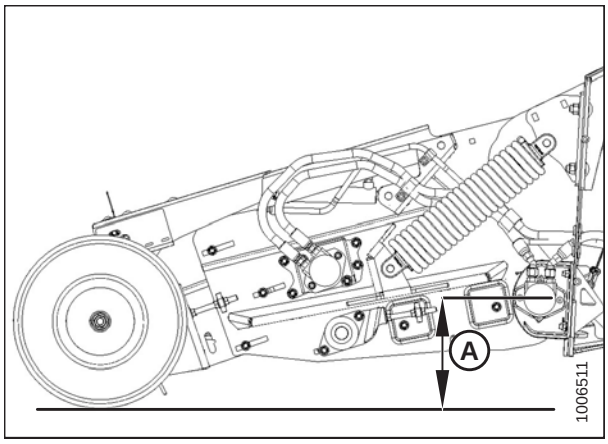

Figure 3.105: Operating Height

Header height adjustments are made using the combine header height control. The numbered decals (A) on both sides of the header indicate the header operating height if the combine is not equipped with an in-cab header height display.

The position of the end plate (B) on the numbered decals (A) represents the header height. Setting the end plate position between 4 and 5 will achieve the recommended operating height of 305 mm (12 in.).

NOTE:

Position 1 represents the lowest header height and position 7 represents the highest.

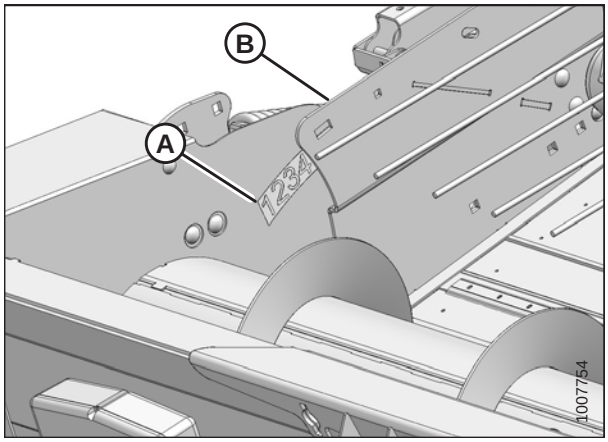

Figure 3.106: Height Gauge

If your combine is factory equipped with auto header height control (AHHC), refer to the following operating and adjustment information. If AHHC is not functioning properly, the sensor output voltage or header height range may require adjustment. For more information, refer to *4.1 Auto Header Height Control (AHHC) System Overview, page 95*.

1. Ensure the optimum operating height is 305 mm (12 in.) off the ground under normal conditions and with the AHHC set to the **NEUTRAL** position.
2. Use the AHHC to change the pick-up operating height to suit your specific crop condition. Refer to your combine operator's manual for details.
3. If the AHHC sensor requires adjustment, refer to *4.1 Auto Header Height Control (AHHC) System Overview, page 95*.

Pick-Up Height

Pick-up height (A) is the distance between the pick-up finger and the ground.

The recommended pick-up height is 25 mm (1 in.), but it may need to be adjusted to suit field conditions. The following symptoms indicate that an adjustment is necessary:

- If the pick-up leaves material in the swath, the pick-up height is too high.
- If the pick-up fingers are wearing quickly or are picking up dirt and stones, the pick-up height is too low.

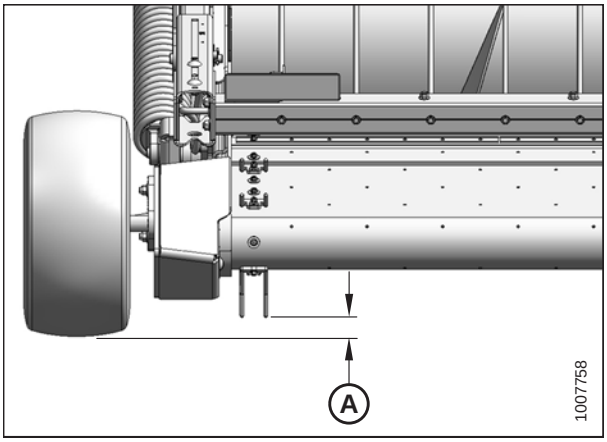

Figure 3.107: Pick-Up Height

Adjusting Pick-Up Height

DANGER

To avoid bodily injury or death from unexpected start-up or fall of a raised machine, always stop engine and remove key before leaving the operator's seat, and always engage safety props before going under the machine for any reason.

1. Check that tire pressure is set to 240–310 kPa (35–45 psi).
2. Adjust the operating height (A) until the rear roller is 305 mm (12 in.) off the ground. Refer to *Header Height, page 78*.

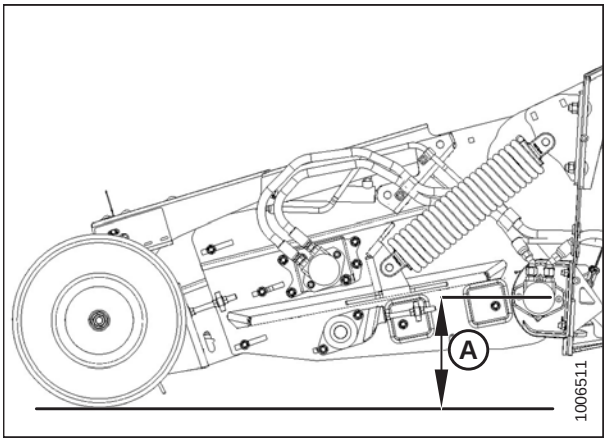

Figure 3.108: Operating Height

3. Check the pick-up height (A). Refer to *Pick-Up Height, page 79*, and complete Steps *4, page 80* to *10, page 80*, if adjustment is necessary.

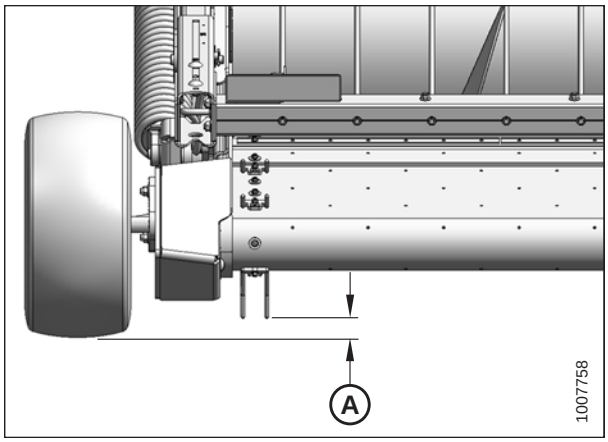

Figure 3.109: Pick-Up Height

4. Use the combine controls to fully raise the header and take the load off the wheels.
5. Engage the combine lift cylinder safety props.
6. Stop the engine and remove the key from the ignition.
7. Loosen the two bolts (A) securing the wheel spindle assembly (B) to the front of the pickup.
8. Rotate the wheel spindle assembly (B) to raise or lower the wheel and achieve the desired draper finger clearance to the ground.

   NOTE:

   The pick-up is factory-set to position number 2 to provide 25 mm (1 in.) clearance to the ground. Rotating the wheel spindle assembly (A) towards position 1 will lower the wheel and provide more finger to ground clearance. Rotating towards position 3 will raise the wheel and provide less finger to ground clearance.

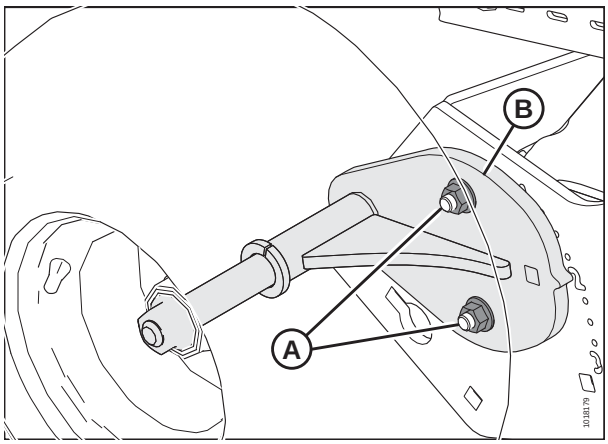

Figure 3.110: Pick-Up Height Adjustment

9. Tighten nuts (A).
10. Repeat Step *4, page 80* to Step *9, page 80* for the opposite side.
11. Adjust the auto header height control (AHHC) if necessary. Refer to *4.1 Auto Header Height Control (AHHC) System Overview, page 95*.

3.12.4 Adjusting Header Float

Header float is factory set, but it can be adjusted if the wheel ground pressure is higher than desired or if it is too light and the wheels don't follow ground terrain.

DANGER

To avoid bodily injury or death from unexpected startup of machine, always stop engine and remove key from ignition before leaving operator's seat for any reason.

1. Attach the header to the combine feeder house and ensure it is latched securely. It is not necessary to hook up the driveline or hydraulics. Refer to the relevant combine attaching procedure:
   - *Attaching to Case IH Combine, page 42*
   - *Attaching to John Deere 60, 70, S, or T Series Combine, page 48*
   - *Attaching to New Holland CR/CX Series Combine, page 56*
   - *Attaching to Versatile Combine, page 61*
2. Lower combine feeder house so the front draper deck is rotated upwards to full floated-up position. Header frame will be close to the ground and coil spring will be fully collapsed.

   NOTE:

   Spring tension is factory-set to the second hole from the bottom on the float anchor.
3. Shut down the combine, and remove the key from the ignition.
4. Open the endshield (A). Refer to *3.3.1 Opening Left Endshield, page 29*.

   NOTE:

   The right side spring float assembly can be removed or adjusted without removing the right endshield. For improved accessibility, however, remove four M12 carriage bolts and hex flange nuts from the endshield support (not shown), and remove the right endshield.

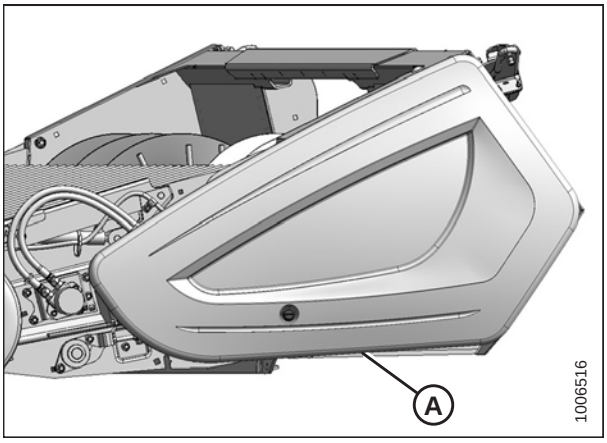

Figure 3.111: Left Endshield

5. Check that all spring tension is released from the spring float assembly (A). Remove cotter pin (B), clevis pin (C), and three flat washers (D).

   NOTE:

   When spring tension is fully released, spring coils should be fully collapsed and the spring float assembly should rock from side to side when moved by hand. If pressure on the clevis pin persists, slightly raise or lower the header.

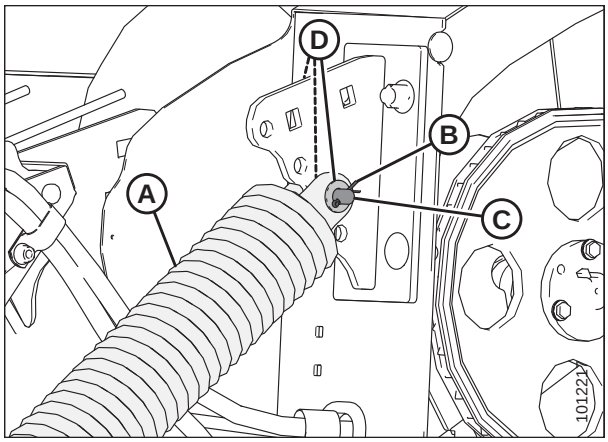

Figure 3.112: Left Side Spring Float Assembly Shown – Right Side Opposite

6. Move spring float assembly (A) to float anchor holes (B) to make wheel ground pressure lighter, or move spring float assembly to float anchor hole (C) to make wheel ground pressure heavier.

   IMPORTANT:

   The left and right spring float assemblies must be set to the same anchor hole position or draper deck damage could result.

   NOTE:

   If the spring float assembly (A) hole does not align with float anchor holes (B) and (C), raise or lower header as necessary.

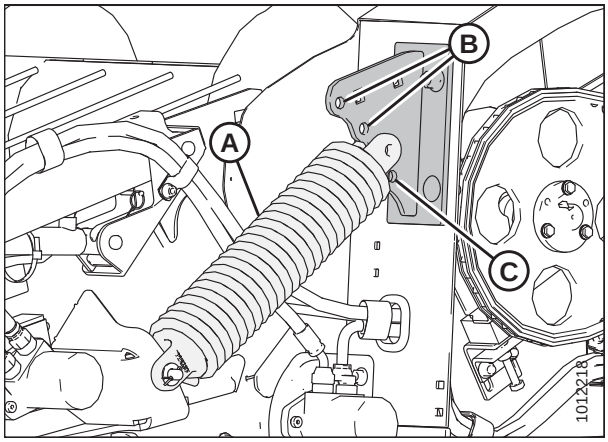

Figure 3.113: Left Side Anchor Shown – Right Side Opposite

7. Insert clevis pin (A) from the inboard side through the rod end of spring float assembly (B), three flat washers (C), and anchor (D) as shown. Secure with cotter pin (E).
8. Repeat procedure for opposite side of header, ensuring that left and right spring float assemblies are set to the same anchor hole position on header.
9. Close left endshield. For instructions, refer to *3.3.2 Closing Left Endshield, page 30*.
10. Replace right endshield if previously removed.

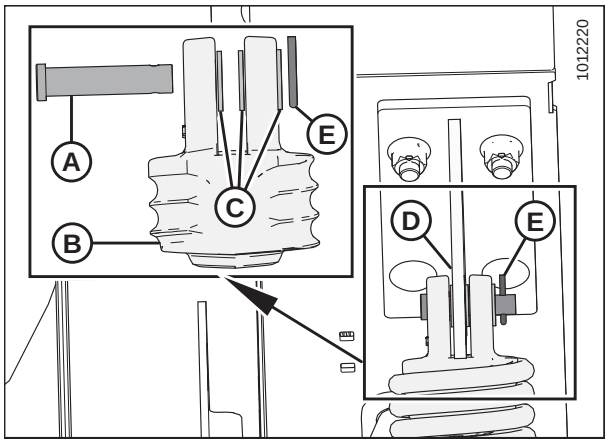

Figure 3.114: Left Side Spring Float Assembly Shown – Right Side Opposite

3.12.5 Hold-Downs

Hold-downs help crop to transition smoothly from the drapers to the auger and can be adjusted for crop conditions.

Hold-Down Position

Hold-down position refers to the position of the fiberglass rods (A) with respect to the swath and can be adjusted according to crop conditions.

The fiberglass rods (A) not only ensure that contact between the swath and pick-up belts is maintained, they also guide the crop under the auger. Applying constant downward pressure to the crop assists with pick-up performance.

Adjust the hold-down position using the combine reel height control according to the following crop conditions:

- (1) Short crop
- (2) Average crop
- (3) Heavy crop

IMPORTANT:

Before reversing the combine feeder house to unplug the feeder, fully raise the hold-down.

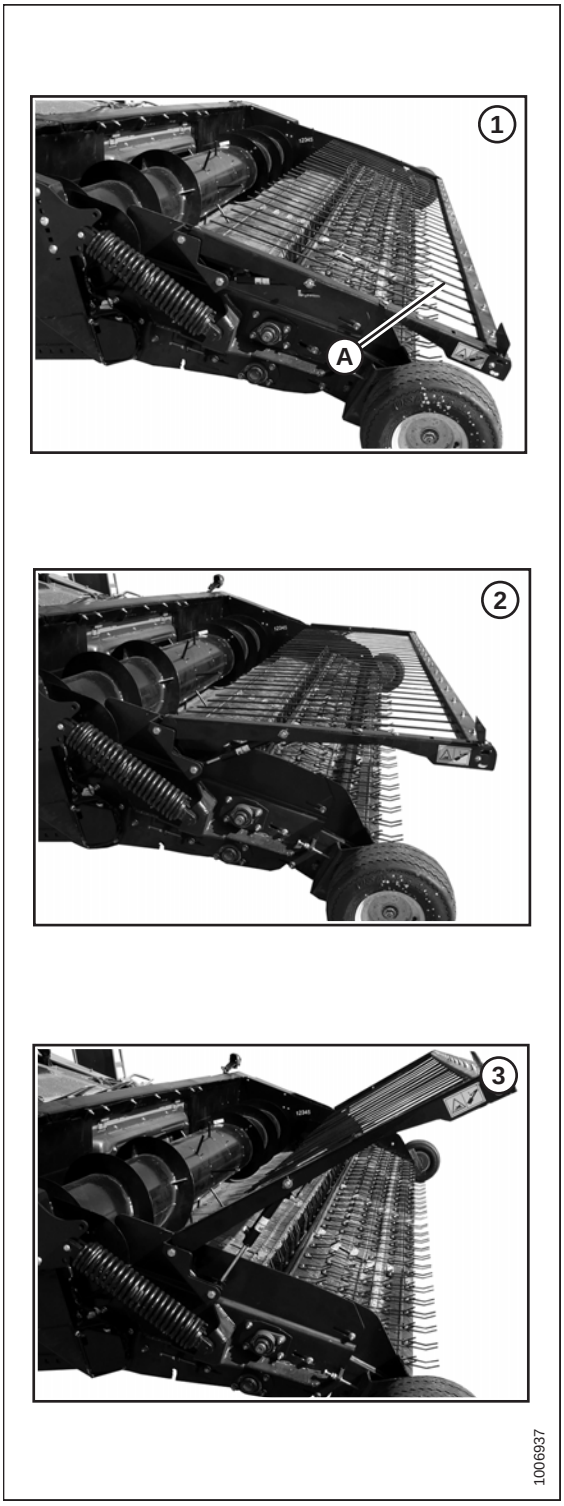

Figure 3.115: Hold-Down Positions

Adjusting Hold-Down Rod Angle

The angle between the fiberglass rods (C) and the hold-down support arms is factory-set to optimize crop flow into the combine. The factory setting should be satisfactory for most crop conditions, but the rods are adjustable if necessary.

1. Loosen two hex head M12 nuts (A) on both ends of the hold-down crossbar (B) until the crossbar rotates.
2. Rotate the crossbar (B) to the desired angle using handle (D).
3. Tighten nuts (A).

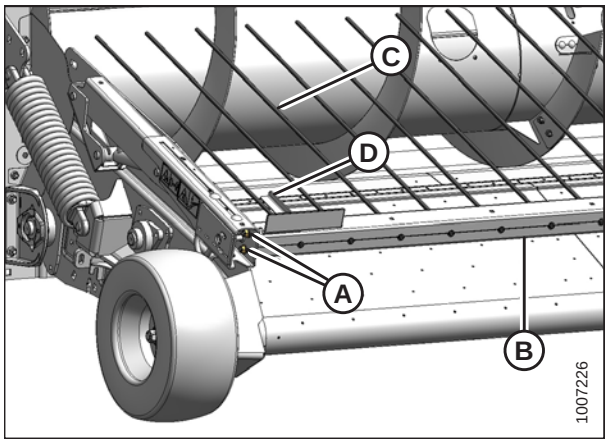

Figure 3.116: Hold-Down Rods

3.12.6 Crop Deflectors

When there is a tendency for stems to collect under the hold-down support arm pivot, crop deflectors can be installed. They are bolted to the frame inside the left endsheet for shipment from the factory and should have been removed at the dealership during setup and installed or retained by the Operator. Under no circumstances should the header be run until the crop deflectors are removed from inside the header drive compartment.

CAUTION

To avoid damage to the header drive, do NOT operate the header with the crop deflectors bolted in the shipping location inside the header drive compartment.

Removing Crop Deflectors from Field Position

DANGER

To avoid bodily injury or death from unexpected startup of machine, always stop engine and remove key from ignition before leaving operator's seat for any reason.

1. Lower hold-down.
2. Lower header to the ground, shut down combine, and remove key from ignition.

3. Remove two M12 x 25 bolts (B) and nuts and remove crop deflector (A).
4. Repeat for opposite side.
5. Store deflectors and hardware in combine cab or an alternative safe location.

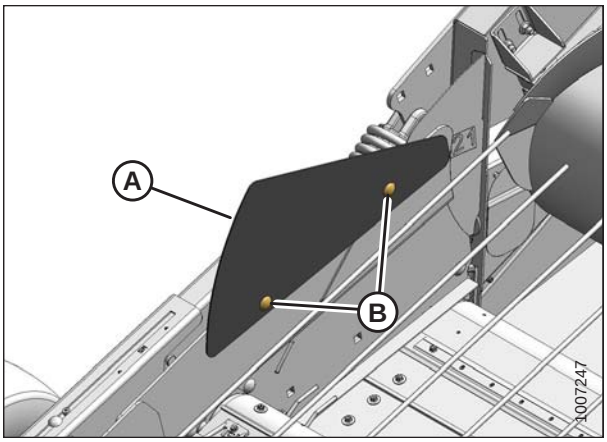

Figure 3.117: Crop Deflector

Installing Crop Deflectors

1. Retrieve crop deflectors from combine cab or previously stored location.
2. Lower hold-down.
3. Lower header to the ground, shut down combine, and remove key from ignition.
4. Position crop deflector (A) onto the header endsheet and secure with two M12 x 25 bolts (B) and nuts provided in the bag.

   NOTE:

   Bolt heads must face inboard.
5. Repeat Step *4, page 85* for the opposite deflector.

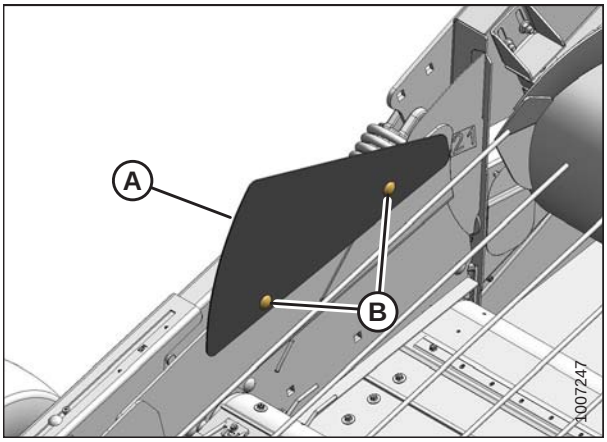

Figure 3.118: Crop Deflector

3.12.7 Draper Belt Tension

The pick-up draper belt tension is set at the factory but should be checked before operating.

NOTE:

- There should be visible sag in the underside of the draper.
- Draper tension needs to be set only to prevent slippage.
- Drapers may be sticky when new. Talcum or baby powder applied to the drapers should help reduce stickiness.

Checking Draper Belt Tension

DANGER

To avoid bodily injury or death from unexpected startup of machine, always stop engine and remove key from ignition before leaving operator's seat for any reason.

NOTE:

Drapers may be sticky when new. To help reduce stickiness, apply talcum or baby powder to the drapers.

1. Raise the header fully and engage the combine safety props.
2. Stop engine and remove key from ignition.
3. Ensure drapers are visible through slots (A). Proper tension is achieved when the draper aligns with indicator notch in slots (A).

   IMPORTANT:

   For proper draper tracking, ensure deck indicator (B) is in the same position on both sides of the header.

   If adjustment is required, refer to *Adjusting Front Draper Belt Tension, page 86* or *Adjusting Rear Draper Belt Tension, page 88*.

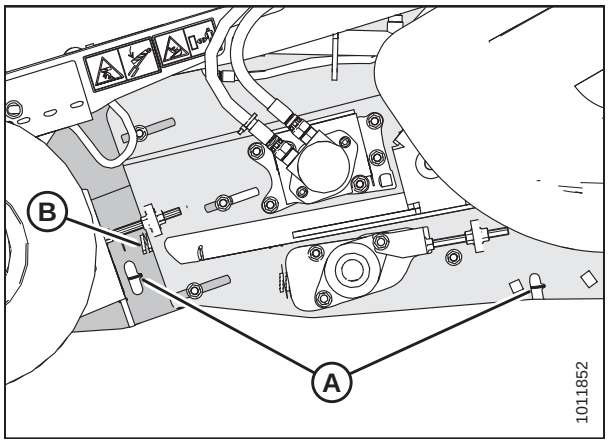

Figure 3.119: Draper Tension Indicator

Adjusting Front Draper Belt Tension

Draper belt tension is factory-set, but it should be checked before operating.

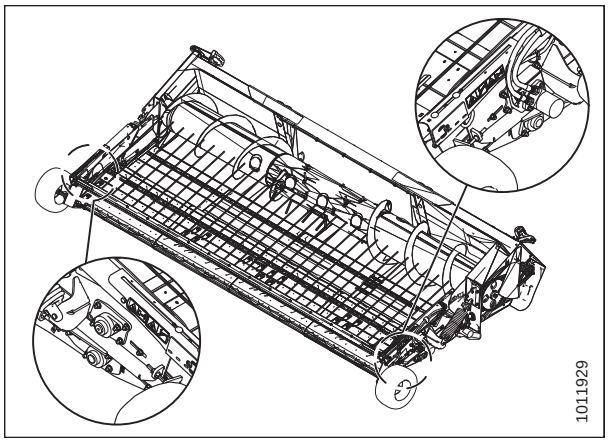

Figure 3.120: Front Deck Adjusting Bolt Locations

The stepped position indicator gauges are used to precisely align each side of the front and rear decks. Each notch (A) represents an adjustment of 1 mm (3/64 in.).

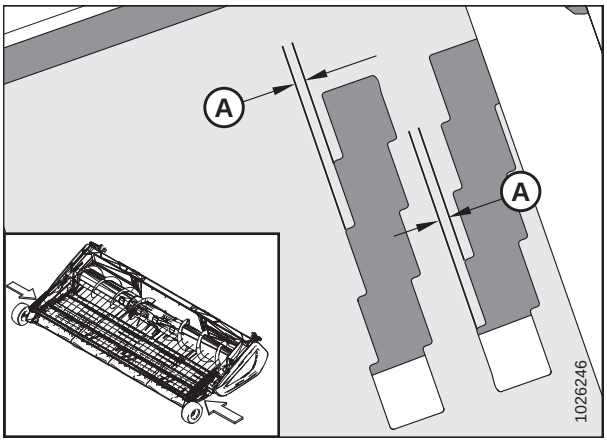

Figure 3.121: Stepped Position Indicators

1. Loosen three clamp bolts (A) on each side of the header.
2. Loosen jam nut (B) on the left side.

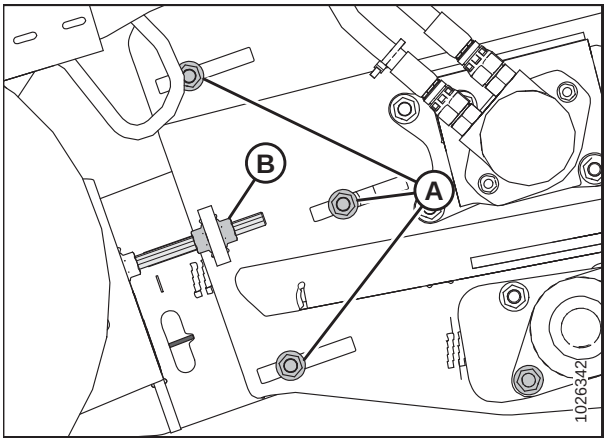

Figure 3.122: Left Side Front Deck Shown – Right Side Opposite

3. Turn adjuster nut (A) to set the draper tension. Proper tension is achieved when the draper lines up with indicator notch (B).

   IMPORTANT:

   Do **NOT** tighten draper above the indicator notch (B). Drapers only need to be tight enough to prevent slippage.

   Overtightening drapers may result in the following:

   - Joining bolts pulling out of draper
   - Damage to the rollers or bearings
   - Twisting and wrinkling of drapers

   NOTE:

   Note the position of the stepped position indicator gauge (C).

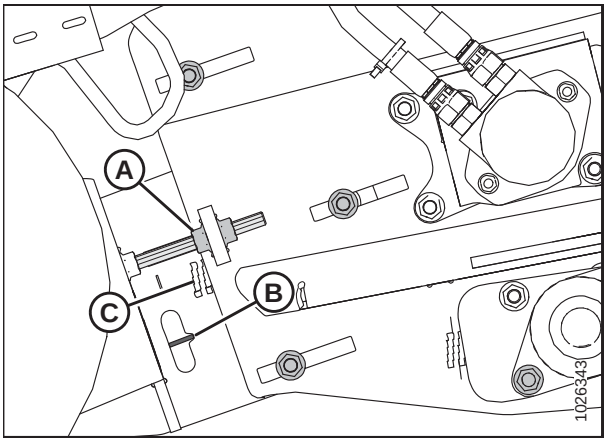

Figure 3.123: Left Side Front Deck Shown – Right Side Opposite

4. Loosen jam nut (A) on the right side of the header, and turn adjuster nut (B) until the position of stepped position indicator gauge (C) is identical to the left side.

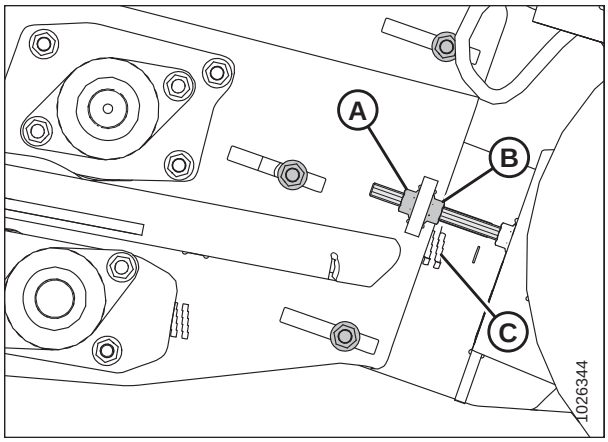

Figure 3.124: Right Side Stepped Position Indicator Gauge

5. Tighten three clamp bolts (A) and jam nut (B) on both sides of the header.

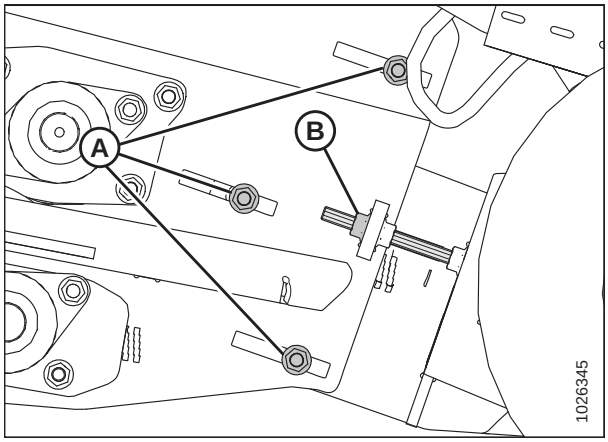

Figure 3.125: Front Deck Adjuster

Adjusting Rear Draper Belt Tension

The stepped position indicator gauges are used to precisely align each side of the front and rear decks. Each notch (A) represents an adjustment of 1 mm (3/64 in.).

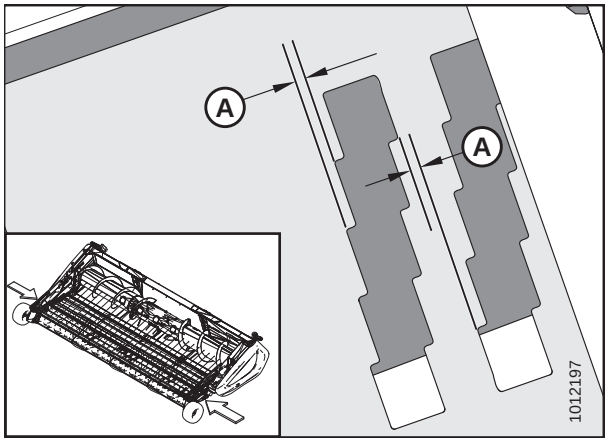

Figure 3.126: Stepped Position Indicators

1. Loosen two clamp bolts (A) on the left side.
2. Loosen jam nut (B).
3. Turn adjuster nut (C) to set the draper tension. Proper tension is achieved when the draper lines up with indicator notch (D).

   IMPORTANT:

   Do **NOT** tighten the draper above indicator notch (D). Drapers only need to be tight enough to prevent slippage, and overtightening drapers may result in the following:

   - Joining bolts pulling out of the draper
   - Damage to the rollers or bearings
   - Drapers twisting and wrinkling
4. Tighten clamp bolts (A) and jam nut (B).
5. Note the position of indicator (E) and set the right side to the same position.
6. Loosen three clamp bolts (A) on the right side.
7. Loosen jam nut (B).
8. Turn adjuster nut (C) until the position of indicator notch (D) is exactly the same as the left side.
9. Tighten clamp bolts (A) and jam nut (B).

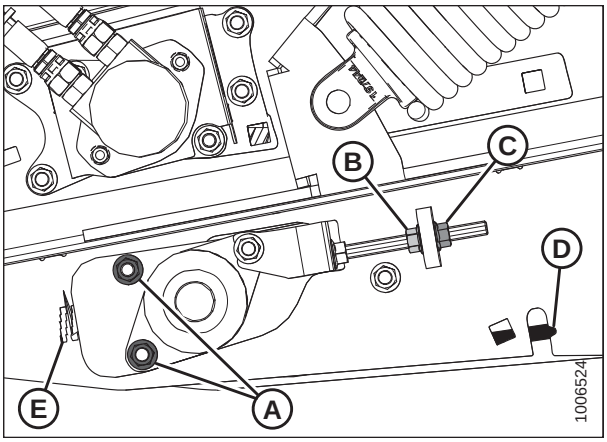

Figure 3.127: Left Side Rear Deck

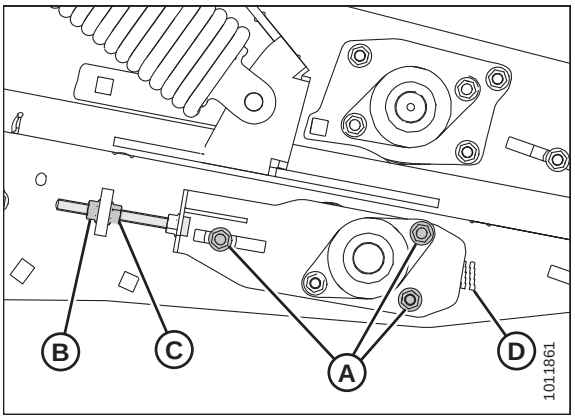

Figure 3.128: Right Side Rear Deck

3.12.8 Driveline

Clutch

The header-to-combine driveline contains a radial pin clutch (A) that provides protection against overload. When the auger encounters an obstruction, an overload occurs and the clutch slips while making a rattling sound and pulsating action. Frequent slippage of more than 2 or 3 seconds may result in clutch damage.

IMPORTANT:

Prolonged operation of the header with the clutch slipping will cause damage to the header and/or clutch.

If the clutch becomes permanently damaged, it must be replaced. Refer to *Replacing Driveline Clutch, page 169*.

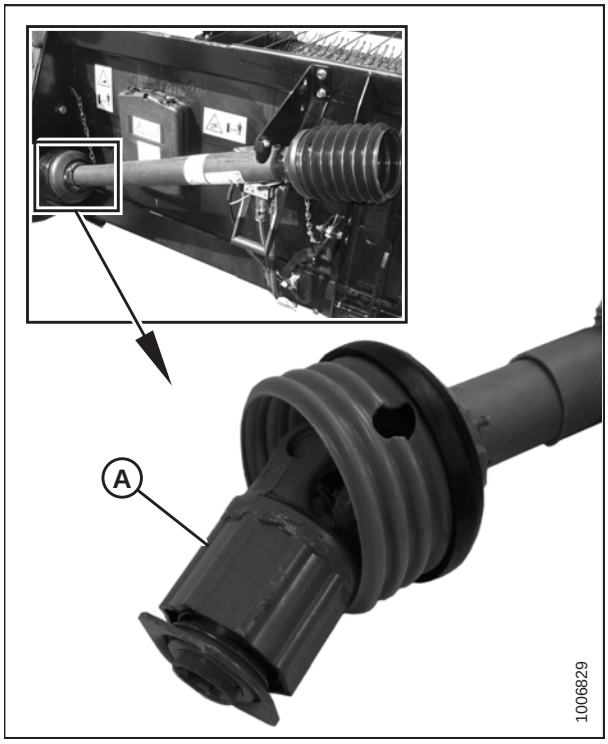

Figure 3.129: Radial Pin Clutch

Driveline Guard

DANGER

To avoid serious injury or death, do NOT operate machine if guard is missing or not in place.

The driveline guard (A) must always remain attached to the driveline. Tethers (light chains) (B) on either end of the driveline guard prevent the guard from rotating. Remove the guard for maintenance purposes only (refer to *Removing Driveline Guard, page 170*).

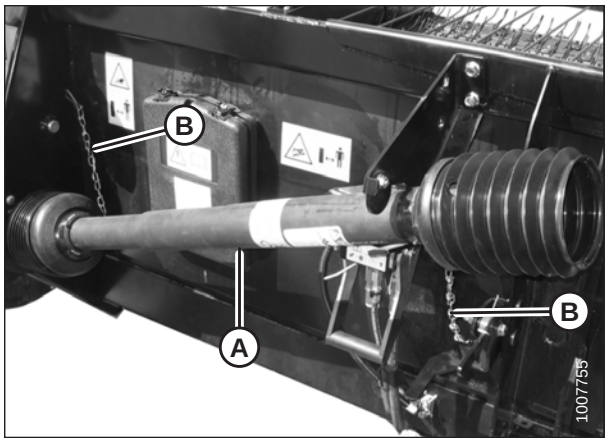

Figure 3.130: Driveline Guard

3.13 Unplugging the Header

DANGER

To avoid bodily injury or death from unexpected startup of machine, always stop engine and remove key from ignition before leaving operator's seat for any reason.

1. Stop forward movement of the combine and disengage the header.
2. Fully raise the hold-down.
3. Disengage the pick-up draper drive.

   IMPORTANT:

   - To prevent damage to the feeder motor, do **NOT** engage the feeder reverser for more than five seconds if the feeder and auger will not turn.
   - To prevent damage to the hold-down rods, raise hold-down assembly before reversing the header.
4. Run the feeder backwards using the reverse controls inside the combine cab to clear the plug.

3.14 Adjusting the Pan Seal Assembly

The flap provides a tighter seal to the rear draper, but the draper connection hardware will eventually wear down the rubber flap. If plugging occurs between the rear draper and the pan seal bar, the rubber flap can be removed to eliminate the pan seal.

DANGER

To avoid bodily injury or death from unexpected startup of machine, always stop engine and remove key from ignition before leaving operator's seat for any reason.

To eliminate the pan seal:

1. Raise the header fully and engage the combine safety props.
2. Stop the engine and remove the key from the ignition.
3. Remove eight M12 carriage bolts and hex flange nuts (A) from support (B) and pan seal bar (C), and remove rubber flap (D).
4. Store rubber flap (D) for reinstallation, or flip rubber flap upside down, install eight M12 carriage bolts and hex flange nuts (A) through support (B), hole (E) in rubber flap, and pan seal bar (C), and torque to 54–68 Nm (40–50 lbf·ft).

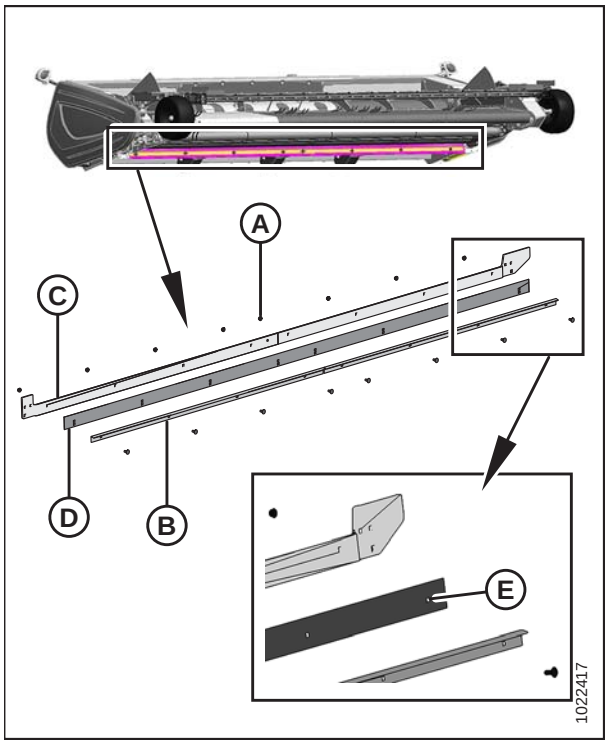

Figure 3.131: Pan Seal Assembly

3.15 Storing the Header

Perform the following tasks before storing the header at the end of each operating season:

CAUTION

Never use gasoline, naphtha, or any volatile material for cleaning purposes. These materials may be toxic and/or flammable.

1. Clean the header thoroughly.
2. Store the machine in a dry, protected place if possible. If storing outside, cover the header with a waterproof canvas or other protective material.
3. Raise the header and engage the header lift cylinder safety props on combine.
4. Use blocks under the header (if possible) to take the weight off the tires.
5. Repaint all worn or chipped painted surfaces to prevent rust.
6. Lubricate the header thoroughly, leaving excess grease on fittings to keep moisture out of bearings.
7. Apply grease to exposed threads, cylinder rods, and sliding surfaces of components.
8. Check for worn components and repair as necessary.
9. Check for broken components and order replacements from your Dealer. Immediate repair of these items will save time and effort at the beginning of next season.
10. Replace or tighten any missing or loose hardware. Refer to *8.1 Torque Specifications, page 273*.

Chapter 4: Auto Header Height Control (AHHC)

4.1 Auto Header Height Control (AHHC) System Overview

MacDon's AHHC feature works in conjunction with the AHHC option available on certain combine models.

NOTE:

This section does not apply to Versatile combines.

Sensors installed at each end of the PW8 Pick-Up Header send a signal to the combine allowing it to maintain a consistent cutting height as the header follows ground contours.

PW8 Pick-Up Headers are factory-equipped for AHHC; however, before using AHHC feature, you must do the following:

1. Ensure that the AHHC sensor's output voltage range is appropriate for combine. For more information, refer to *4.4 Height Sensor Output Voltage Range – Combine Requirements, page 103*.
2. Prepare combine to use AHHC feature.
3. Calibrate AHHC system so that combine can correctly interpret data from height sensors on header. Once calibration is complete, you are ready to use AHHC feature in the field. For each combine, certain operation settings can be used to improve performance of AHHC feature.

   NOTE:

   If your PW8 Pick-Up Header is not equipped to work with a specific combine model, you will need to install appropriate combine completion package. Completion packages come with instructions for installing height sensors.

Refer to the following instructions for your specific combine model:

- *4.5 Case IH 5130/6130/7130 and 5140/6140/7140 Midrange Combines, page 108*
- *4.6 Case IH 7010/8010, 7120/8120/9120, 7230/8230/9230, and 7240/8240/9240 Combines, page 115*
- *4.7 John Deere 60 Series Combines, page 124*
- *4.8 John Deere 70 Series Combines, page 130*
- *4.9 John Deere S and T Series Combines, page 134*
- *4.10 New Holland Combines CX/CR Series (CR Series – Model Year 2014 and Earlier), page 142*
- *4.11 New Holland Combines (CR Series – Model Year 2015 and Later), page 150*

4.2 AHHC Sensor Operation

The position sensors supplied with the auto header height control (AHHC) system are 1000 ohm (1 k) industrial series variable resistor consisting of a sealed unit with a three-pin connection point (A) and two mounting holes (B). A signal wire is connected internally to a movable wiper (C) that sweeps across a high resistance filament band. An external arm is attached to the movable wiper (C) and as it moves, the wiper moves across the resistance filament to change the resistance at signal wire, which changes the output voltage. The resistance across the power and ground pins should be approximately 100 ohms. Normal operating signal voltages are 0.5–4.5 VDC or 5–95% of available voltage.

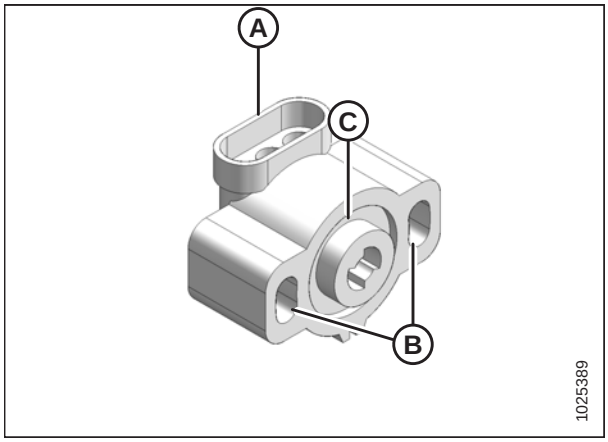

Figure 4.1: Variable Resistor Type Sensor

- A sensor operating with a signal voltage **below 5%** is considered to be shorted.
- A sensor with a signal voltage **above 95%** is considered to be open.
- A change in header height will cause the voltage signal to change.

4.3 Header Height Sensors

The PW8 Pick-Up Header is equipped with two height sensors—one at each end of header. The height sensors do not require maintenance, but they may need to be repaired or replaced due to normal wear and tear.

The sensors may require calibration if there are problems with pick-up height control. Contact your Dealer.

Figure 4.2: Height Sensors

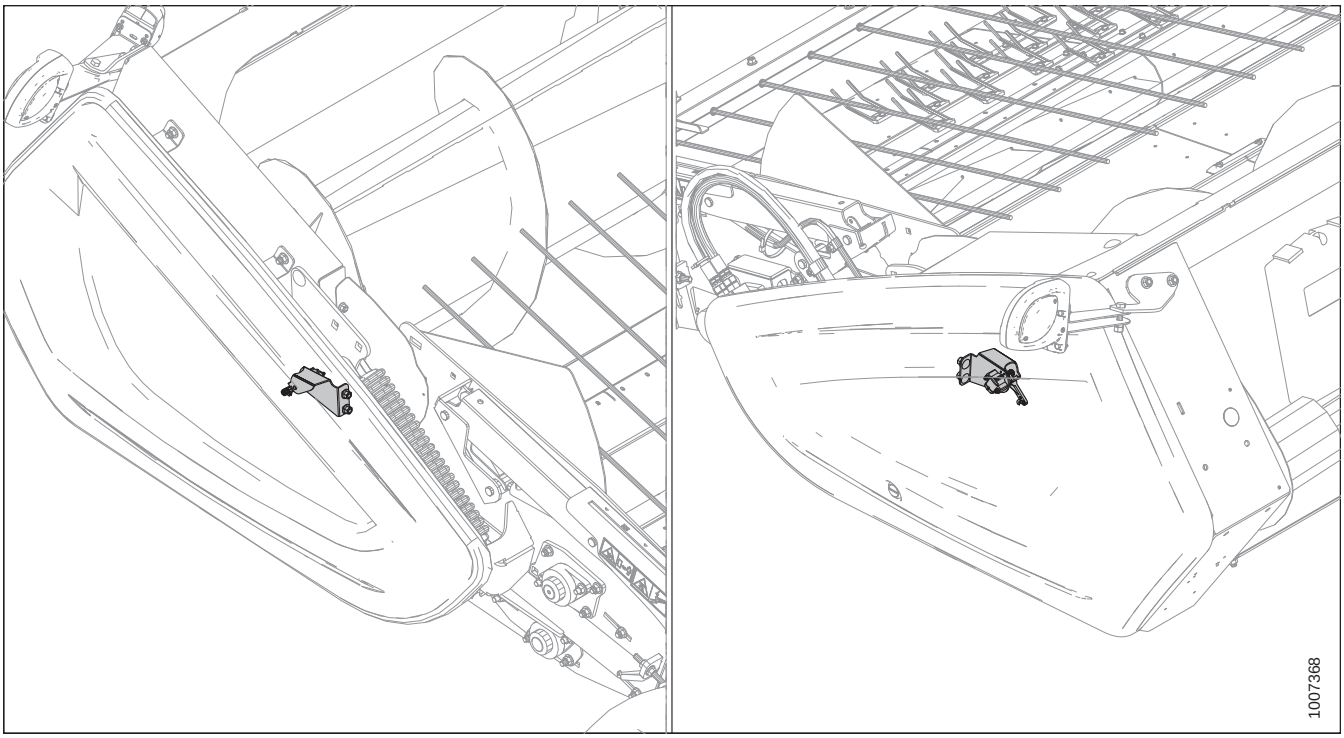

4.3.1 Removing Header Height Sensor Assembly (Left Side)

DANGER

To avoid bodily injury or death from unexpected startup of machine, always stop engine and remove key from ignition before leaving operator's seat for any reason.

1. Lower header to ground, shut down combine, and remove key from ignition.
2. Open left endshield. Refer to *3.3.1 Opening Left Endshield, page 29*.

3. Disconnect wire harness (A).
4. Push up on rod end clip (B). Slide linkage rod (C) out of rod end clip (B).

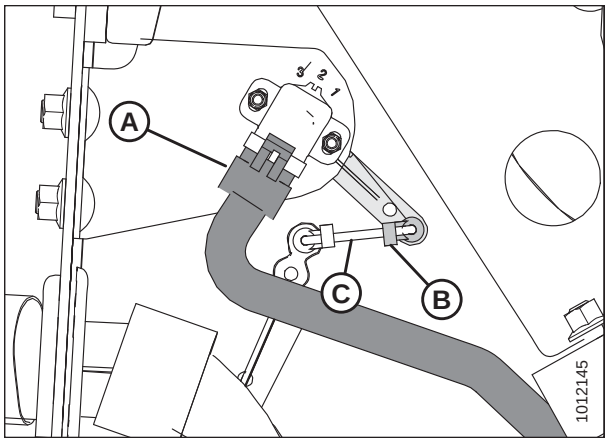

Figure 4.3: Header Height Sensor Assembly – Left Side

5. Remove nuts and bolts (A).
6. Remove sensor (B) and control arm (C).

   NOTE:

   Note orientation of control arm, this will be required for reassembly.

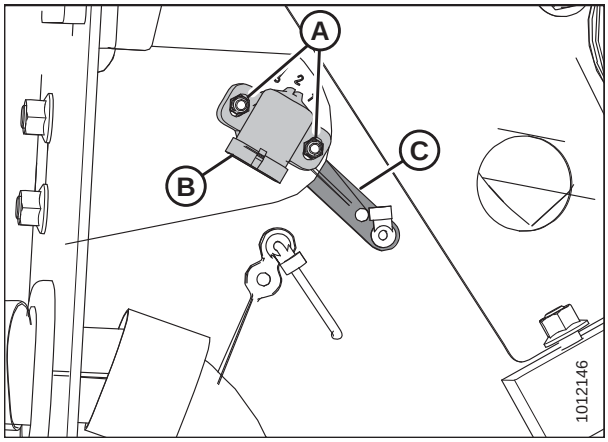

Figure 4.4: Header Height Sensor Assembly – Left Side

4.3.2 Installing Header Height Sensor Assembly (Left Side)

1. Install control arm (C). Ensure that flat side is facing towards header.
2. Install sensor (B), center bolts in slots, and secure with nuts (A).

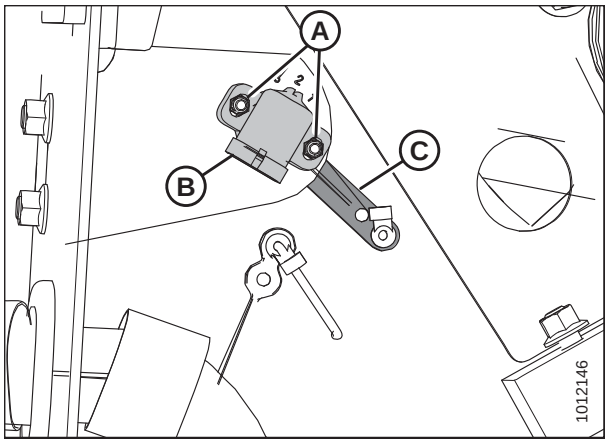

Figure 4.5: Header Height Sensor Assembly – Left Side

3. Slide linkage rod (C) into rod end clip (B). Secure rod end clip by pressing it onto linkage rod (C).
4. Connect wire harness (A).
5. Close left endshield. Refer to *3.3.2 Closing Left Endshield, page 30* for instructions.

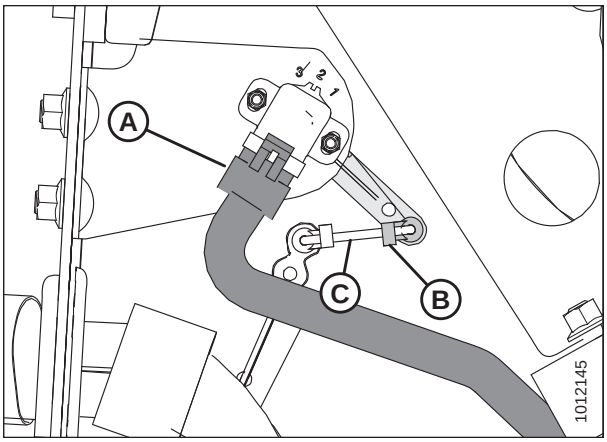

Figure 4.6: Header Height Sensor Assembly – Left Side

4.3.3 Removing Header Height Control System (Right Side)

DANGER

To avoid bodily injury or death from unexpected startup of machine, always stop engine and remove key from ignition before leaving operator's seat for any reason.

1. Raise hold-down and engage lift cylinder safety props.
2. Lower header to ground, shut down combine, and remove key from ignition.
3. Locate access panel on inside of right end frame. Remove two bolts (A) from access panel (B).
4. Remove access panel (B).

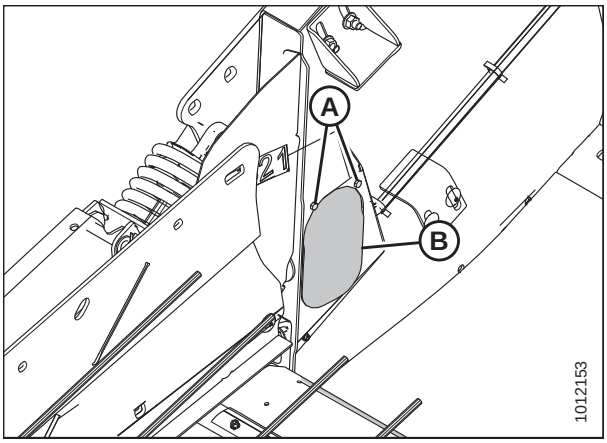

Figure 4.7: Header Height System Access Panel – Right Side

5. Disconnect wire harness (A).
6. Push up on rod end clip (B). Slide linkage rod (C) out of rod end clip (B).

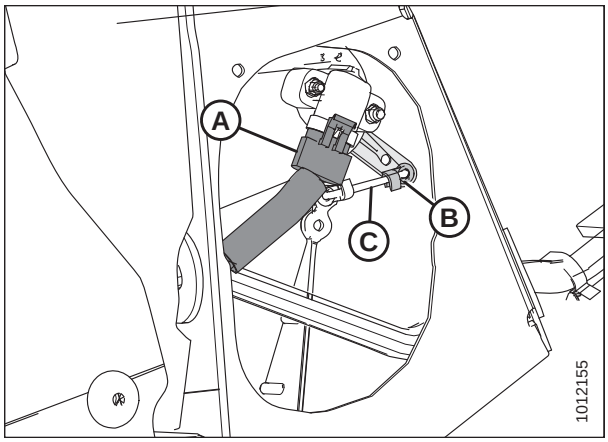

Figure 4.8: Header Height Sensor Assembly – Right Side

7. Remove nuts and bolts (A).
8. Remove sensor (B) and control arm (C).

   NOTE:

   Note orientation of control arm; this will be required for reassembly.

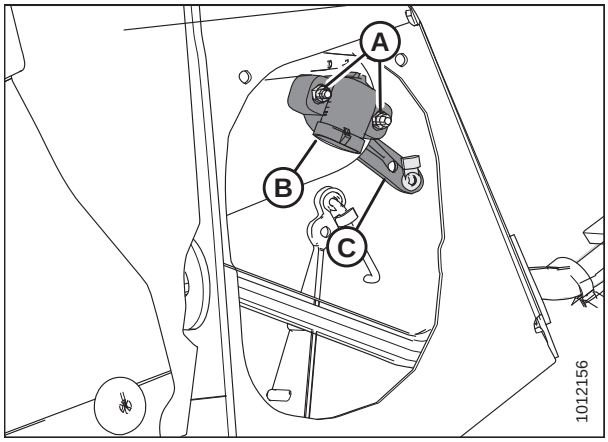

Figure 4.9: Header Height Sensor Assembly – Right Side

9. Locate plug (A) on outboard side of endsheet and remove plug to gain access to nut (B) securing long control arm to frame.
10. Remove nut (B).

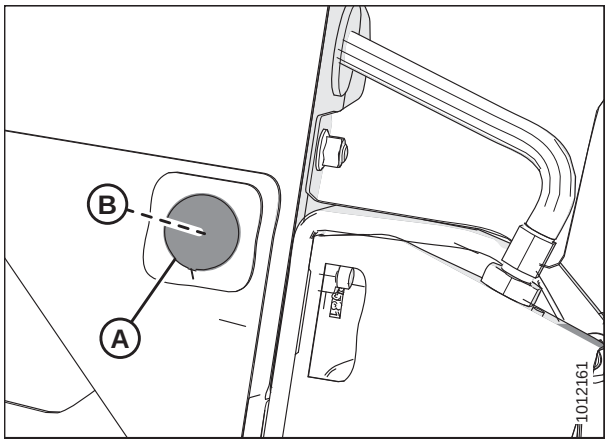

Figure 4.10: Right Endsheet

11. Remove long control arm (A) complete with linkage rod, rod end clip, and activator arm.

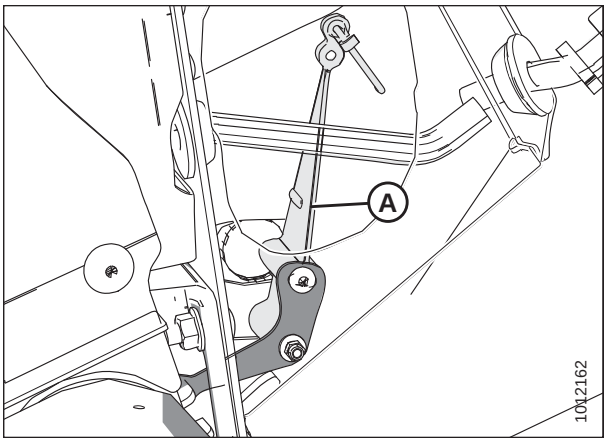

Figure 4.11: Header Height Sensor Assembly – Right Side

4.3.4 Installing Header Height Sensor Assembly (Right Side)

1. Install long control arm (A) complete with linkage rod, rod end clip, and activator arm.

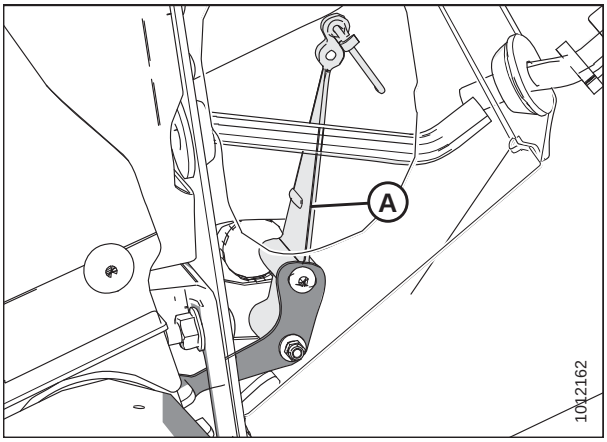

Figure 4.12: Header Height Sensor Assembly – Right Side

2. Install nut (B).
3. Install hole plug (A).

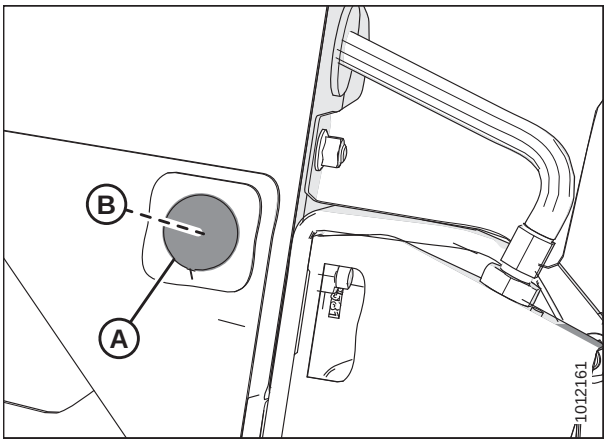

Figure 4.13: Right Endsheet

4. Install control arm (C). Ensure that flat side is facing towards header.
5. Install sensor (B), center bolts in slots, and secure with nuts (A).

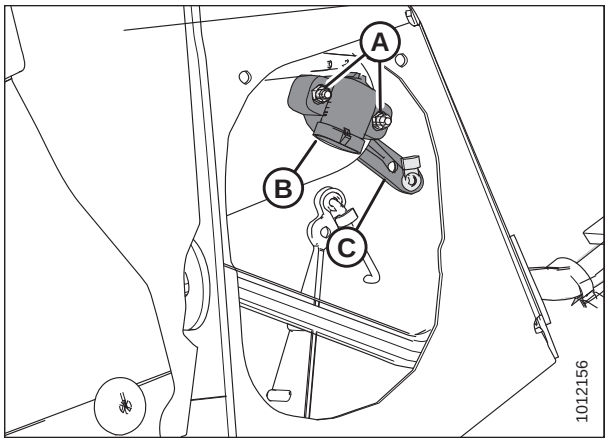

Figure 4.14: Header Height Sensor Assembly – Right Side

6. Slide linkage rod (C) into rod end clip (B). Secure rod end clip by pressing it onto linkage rod (C).
7. Connect wire harness (A).

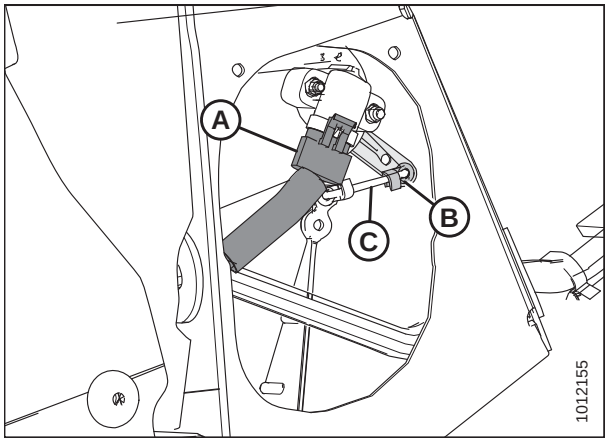

Figure 4.15: Header Height Sensor Assembly – Right Side

8. Install access panel (B), and secure it with bolts (A).

   NOTE:
   Auger has been removed for illustration purposes.

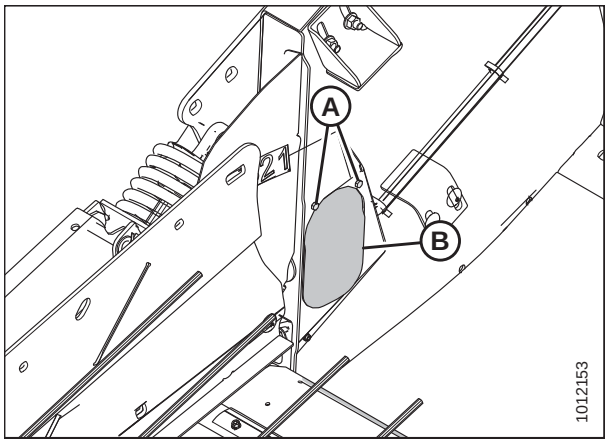

Figure 4.16: Access Panel

4.4 Height Sensor Output Voltage Range – Combine Requirements

The height sensor output must be within a specific voltage range for each combine or the auto header height control (AHHC) feature will not work properly.

Table 4.1 Combine Voltage Range

Combine	Low Voltage Limit	High Voltage Limit	Minimum Range
Case IH 7/8010, 5/6/7088, 7/8/9120, 5/6/7130, 5/6/7140, 7/8/9230, 7/8/9240	0.7 V	4.3 V	2.5 V
John Deere 60/70/S/T Series	0.7 V	4.3 V	2.5 V
New Holland CR/CX – 5 V system	0.7 V	4.3 V	2.5 V
New Holland CR/CX – 10 V system	3.0 V	7.0 V	4.1–4.4 V

NOTE:

For instructions on manually checking voltage range, refer to *4.4.1 Manually Checking Voltage Range, page 103*.

4.4.1 Manually Checking Voltage Range

In some combines, output voltage range of auto header height control (AHHC) sensors can be checked from the cab. For instructions, refer to the combine operator's manual or AHHC instructions later in this document.

1. Position the header until the header wheels are approximately 150 mm (6 in.) above the ground.

   NOTE:

   Ensure float spring is fully extended. Refer to *3.12.4 Adjusting Header Float, page 81*. If float spring is not fully extended during next step, voltage may go out of range during operation causing a malfunction of AHHC system.

2. Shut down combine. Position key so that power is supplied to sensors.
3. Open left endshield. For instructions, refer to *3.3.1 Opening Left Endshield, page 29*.

4. Locate left height sensor (A).

   NOTE:

   Sensor and connector may not be exactly as shown.

5. With connector plugged into sensor, measure voltage between orange signal wire (B) in middle position on connector, and the brown ground wire (C) at one side of connector. This is the maximum voltage for the left sensor.

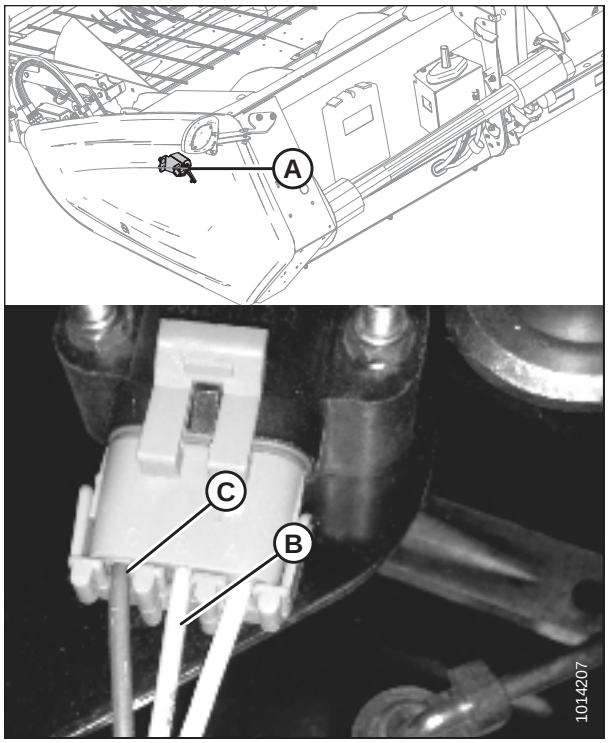

Figure 4.17: Left Height Sensor

6. Locate access panel (A) on inside of right end frame.

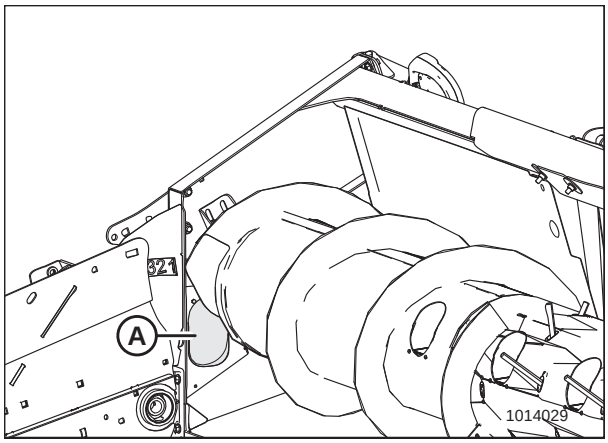

Figure 4.18: Right Access Panel

7. Remove two bolts (A) and access panel (B).

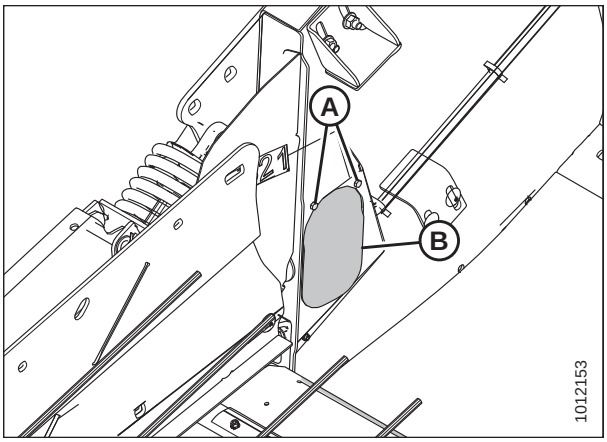

Figure 4.19: Right Access Panel

8. Locate right height sensor (A).

   NOTE:

   Sensor may not be exactly as shown, and view of harness is from inboard side of endsheet.

9. With connector plugged into the sensor, measure voltage between the orange signal wire (B) in middle position on connector, and the brown ground wire (C) on one side of connector. This is the maximum voltage for the right sensor.

10. Start combine and fully lower combine feeder house. The float springs should be fully compressed. Shut down combine, and position the key so that power is supplied to the sensors.

11. Repeat voltage measurements for both sensors. These are the minimum voltages.

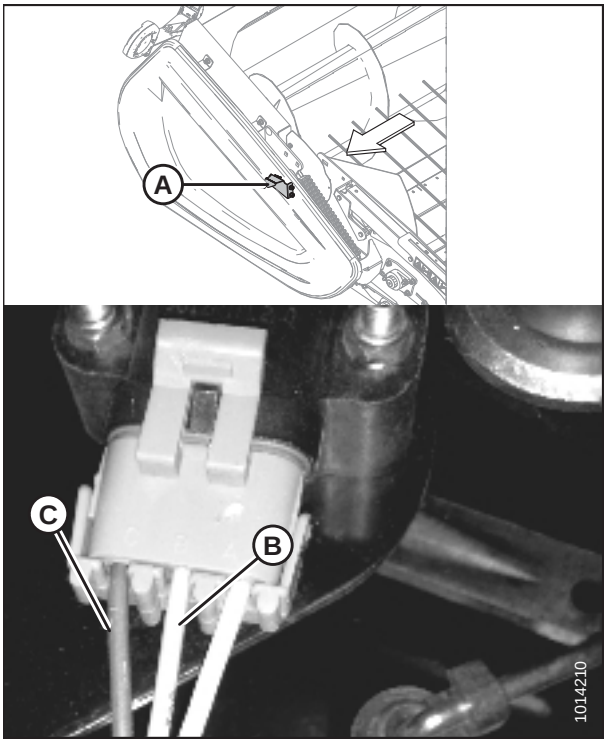

Figure 4.20: Right Height Sensor

12. Compare voltage measurements to specified values. Refer to *4.4 Height Sensor Output Voltage Range – Combine Requirements, page 103*.

13. If sensor voltage is outside low and high limits, or if voltage range is less than specified value, adjustments are required. For instructions, refer to *4.4.2 Adjusting Header Height Sensor Voltage Range (Left Side), page 106* or *4.4.3 Adjusting Header Height Sensor Voltage Range (Right Side), page 106*.

4.4.2 Adjusting Header Height Sensor Voltage Range (Left Side)

DANGER

To avoid bodily injury or death from unexpected startup of machine, always stop engine and remove key from ignition before leaving operator's seat for any reason.

1. Lower header to ground, shut down combine, and remove key from ignition.
2. Open left endshield. Refer to *3.3.1 Opening Left Endshield, page 29*.
3. Loosen nuts (A).
4. Rotate control (B) until desired voltage range is achieved. Refer to *4.4 Height Sensor Output Voltage Range – Combine Requirements, page 103*.

   NOTE:

   If voltage range is too large or too small, you may need to relocate linkage rod (C) to a different hole in sensor control arm (D). If that doesn't work, relocate linkage rod (C) to a different hole in sensor control arm (E).
5. Tighten nuts (A).
6. Close left endshield. Refer to *3.3.2 Closing Left Endshield, page 30*.

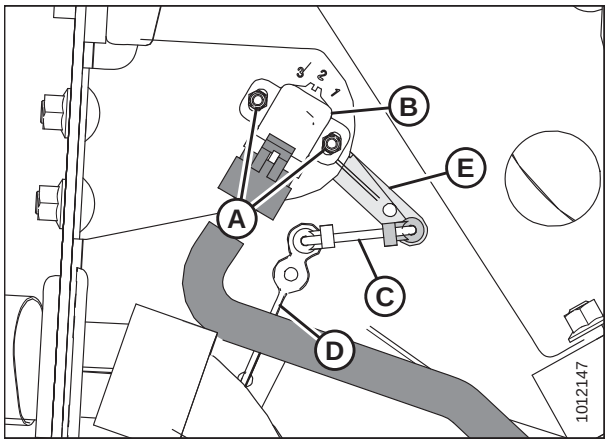

Figure 4.21: Header Height Sensor Assembly – Left Side

4.4.3 Adjusting Header Height Sensor Voltage Range (Right Side)

DANGER

To avoid bodily injury or death from unexpected startup of machine, always stop engine and remove key from ignition before leaving operator's seat for any reason.

1. Raise hold-down and engage lift cylinder safety props.
2. Lower header to ground, shut down combine, and remove key from the ignition.
3. Locate access panel (A) on inside of right end frame.

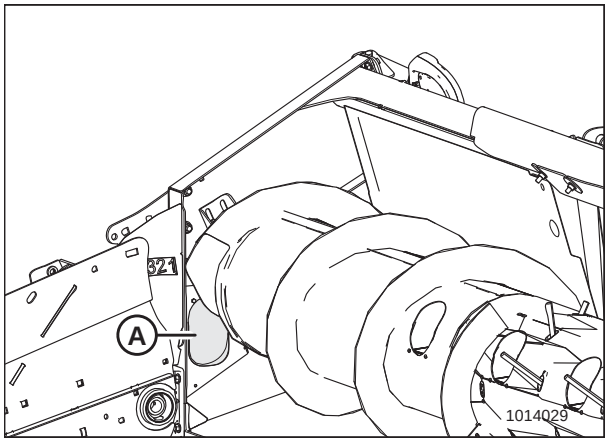

Figure 4.22: Right Access Panel

4. Remove two bolts (A) and access panel (B).

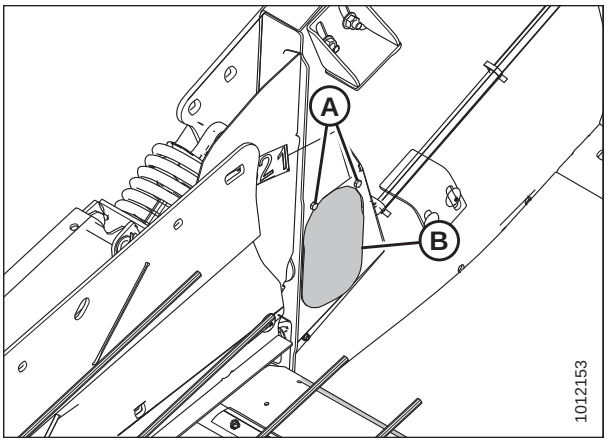

Figure 4.23: Right Access Panel

5. Loosen nuts (A).
6. Rotate sensor (B) until desired voltage range is achieved. Refer to *4.4 Height Sensor Output Voltage Range – Combine Requirements, page 103* for instructions.

   NOTE:

   If voltage range is too large or too small, you may need to relocate linkage rod (C) to a different hole in sensor control arm (D). If that doesn't work, relocate linkage rod (C) to a different hole in sensor control arm (E).
7. Tighten nuts (A).

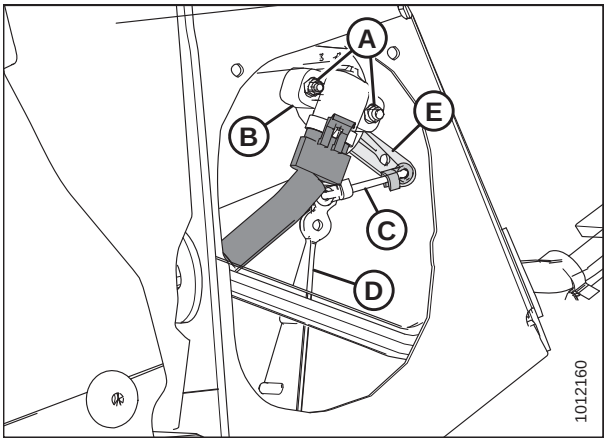

Figure 4.24: Header Height Sensor Assembly – Right Side

8. Once complete, install access panel (B) and secure it with bolts (A).

   NOTE:

   The auger has been removed from the illustration for clarity.

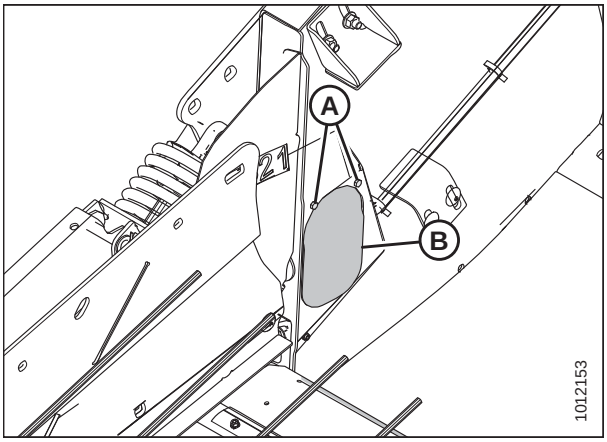

Figure 4.25: Right Access Panel

4.5 Case IH 5130/6130/7130 and 5140/6140/7140 Midrange Combines

4.5.1 Setting up the Header on the Combine Display (Case IH 5130/6130/7130; 5140/6140/7140)

1. On the main page of the combine display, select TOOLBOX (A).

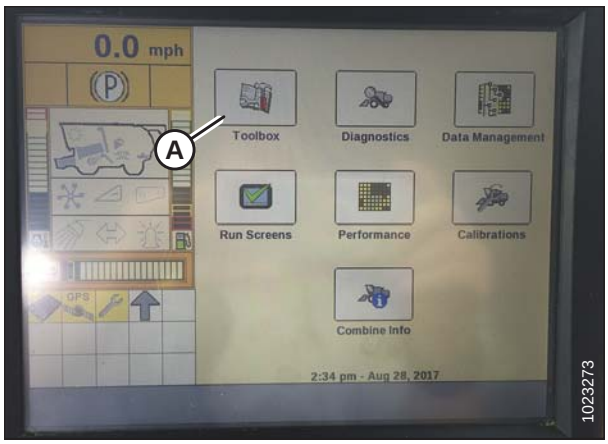

Figure 4.26: Case IH Combine Display

2. Select the HEAD 1 tab (A). The HEADER SETUP page displays.
3. From the CUTTING TYPE menu (B), select PLATFORM.

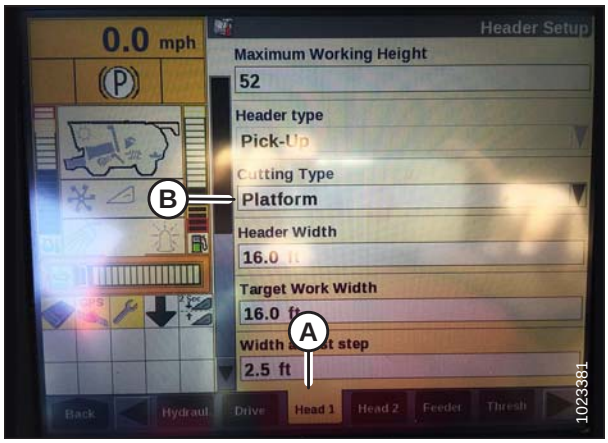

Figure 4.27: Case IH Combine Display

4. Select the HEAD 2 tab (A). The HEADER SETUP 2 page displays.
5. From the HEADER PRESSURE FLOAT menu (B), select NOT INSTALLED.

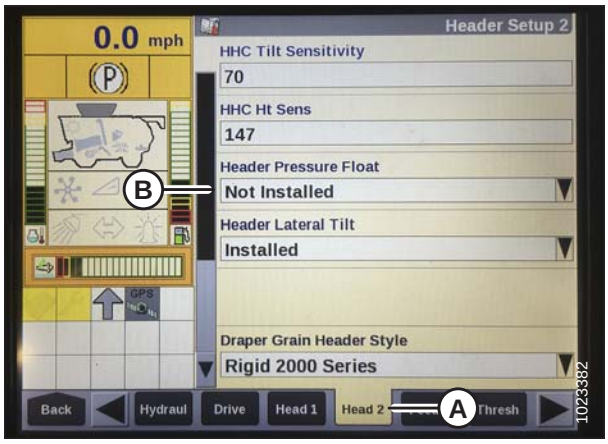

Figure 4.28: Case IH Combine Display

6. From the BELT DRIVE TYPE menu (A), select
   - 1 - for most pick-up headers
   - 2 - for 4.9 m (16 ft.) Rake-Up pick-up headers
   - 3 - for SwathMaster pick-up headers

   NOTE:

   Proper belt drive selection optimizes auto-belt to ground speed.

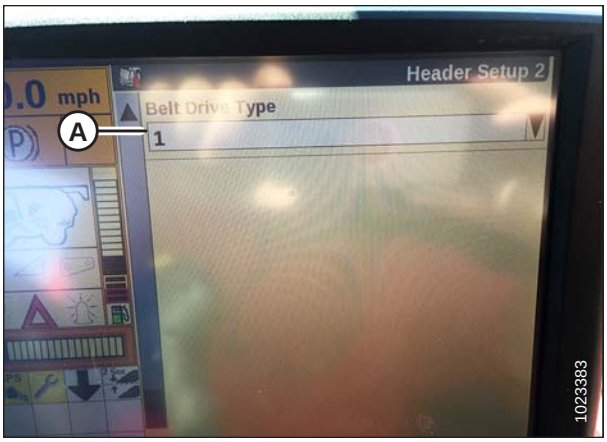

Figure 4.29: Case IH Combine Display

4.5.2 Checking Voltage Range from Combine Cab (Case IH 5130/6130/7130; 5140/6140/7140)

NOTE:

Changes may have been made to combine controls or display since this document was published. Refer to combine operator's manual for updates.

CAUTION

Check to be sure all bystanders have cleared the area.

1. Raise header until header wheels are 150 mm (6 in.) above ground.
2. On the main page of the combine display, select DIAGNOSTICS (A). The DIAGNOSTICS page opens.

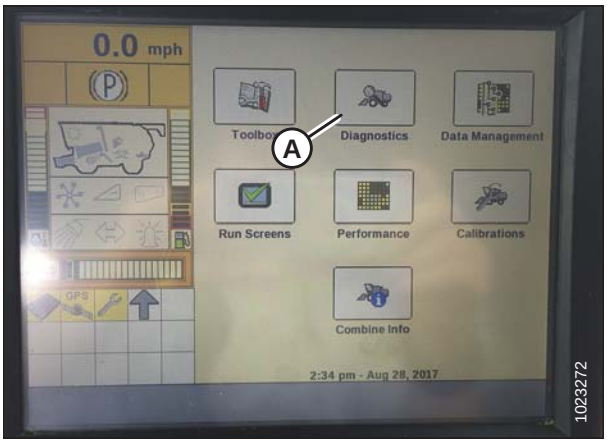

Figure 4.30: Case IH Combine Display

3. Select SETTINGS (A). The SETTINGS page opens.
4. From the GROUP menu (B), select HEADER.

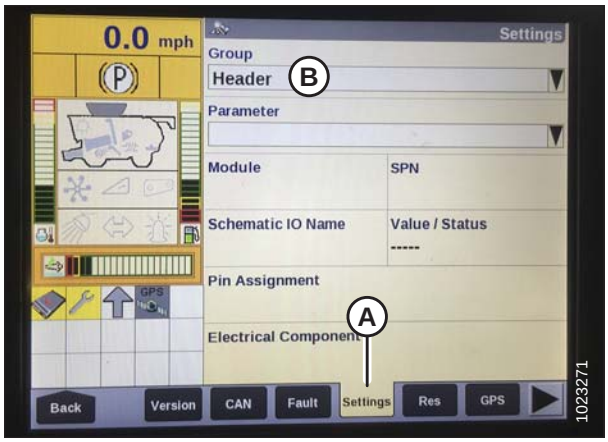

Figure 4.31: Case IH Combine Display

5. From the PARAMETER menu, select LEFT HEIGHT/TILT SENSOR (A).

Figure 4.32: Case IH Combine Display

6. The SETTINGS page updates to display the voltage in the VALUE/STATUS field (A). Lower the feeder house fully, and then raise it 305 mm (12 in.) off the ground to view the full range of voltage readings.
7. If sensor voltage is not within low and high limits shown in *4.4 Height Sensor Output Voltage Range – Combine Requirements, page 103*, or if range between low and high limits is insufficient, you need to make adjustments. For instructions, refer to *4.4.2 Adjusting Header Height Sensor Voltage Range (Left Side), page 106* and *4.4.3 Adjusting Header Height Sensor Voltage Range (Right Side), page 106*.

Figure 4.33: Case IH Combine Display

4.5.3 Calibrating Auto Header Height Control (Case IH 5130/6130/7130; 5140/6140/7140)

NOTE:

This procedure applies to combines with a software version below 28.00. For instructions on calibrating the AHHC for combines with software version 28.00 or above, refer to *4.6.4 Calibrating Auto Header Height Control (Case IH Combines with Version 28.00 or Higher Software), page 120*.

NOTE:

Changes may have been made to the combine controls or display since this document was published. Refer to the combine operator's manual for updates.

1. Ensure all header electrical and hydraulic connections are made.
2. Lower the combine feeder house all the way down (the feeder house will stop moving).
3. Hold the DOWN button for 2 seconds.
4. Push the RAISE button and hold it until the feeder house travels all the way up. It will stop 61 cm (2 ft.) above ground for 5 seconds, then it will resume lift. This is an indication that calibration is successful.

Figure 4.34: Calibrating Auto Header Height

4.5.4 Setting Preset Cutting Height (Case IH 5130/6130/7130; 5140/6140/7140)

To set preset cutting height, follow these steps:

NOTE:

Changes may have been made to combine controls or display since this document was published. Refer to combine operator's manual for updates.

CAUTION

Check to be sure all bystanders have cleared the area.

1. Engage separator and header.
2. Manually raise or lower header to desired cutting height.
3. Press 1 on button (A). A yellow light next to the button will illuminate.

Figure 4.35: Case Combine Console

4. Manually raise or lower header to a second desired cutting height.
5. Press 2 on button (A). A yellow light next to the button will illuminate.

Figure 4.36: Case Combine Console

Up and down arrows should now appear in the MANUAL HEIGHT box (A) on the RUN 1 page on the combine display. This indicates that the auto header height control (AHHC) is functioning.

Figure 4.37: Case Combine Display – Run 1 Page

6. To enable the presets, activate AHHC button (A) to place the header on the ground. To enable the first preset, tap the button once. To enable the second preset, tap the button twice.

   To lift the header to maximum working height, hold the SHIFT button on the back of the ground speed lever (GSL) while tapping AHHC button (A).

Figure 4.38: Case Combine Joystick

7. The maximum working height can be adjusted on the HEADER SETUP page on the combine display. Enter the desired height in the MAXIMUM WORKING HEIGHT field (A).

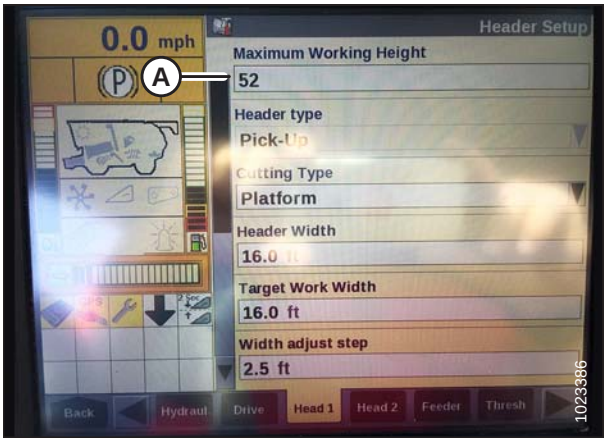

Figure 4.39: Case Combine Display – Header Setup Page

8. If you need to change the position of one of the presets, you can fine tune this setting with button (A) on the combine console.

Figure 4.40: Case Combine Console

4.6 Case IH 7010/8010, 7120/8120/9120, 7230/8230/9230, and 7240/8240/9240 Combines

4.6.1 Checking Voltage Range from Combine Cab (Case 8010)

NOTE:

Changes may have been made to combine controls or display since this document was published. Refer to combine operator's manual for updates.

CAUTION

Check to be sure all bystanders have cleared the area.

1. Raise header until header wheels are 150 mm (6 in.) above ground.
2. Select DIAG (A) on Universal display MAIN page. The DIAG page displays.

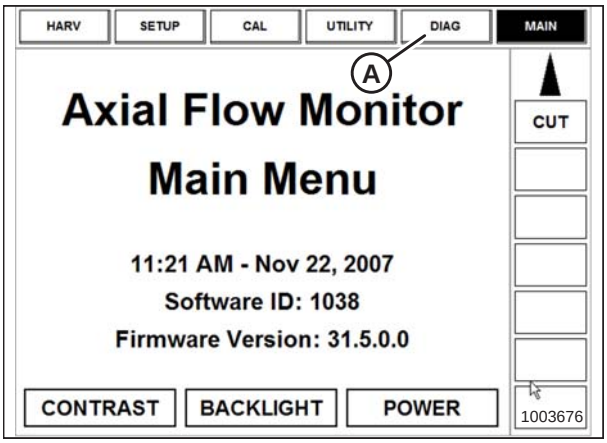

Figure 4.41: Case 8010 Combine Display

3. Select SUB SYSTEM (A). The SUB SYSTEM page displays.

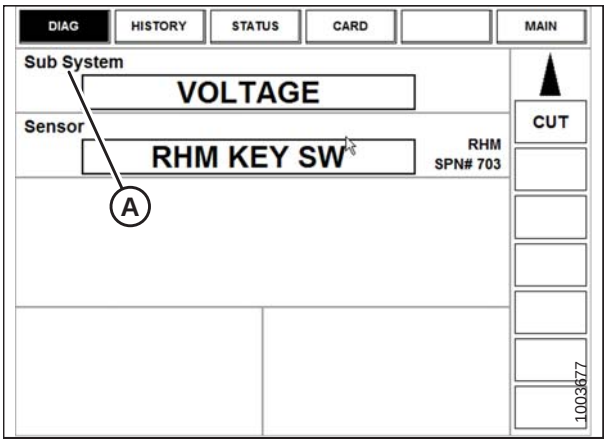

Figure 4.42: Case 8010 Combine Display

4. Select HDR HEIGHT/TILT (A). The SENSOR page displays.

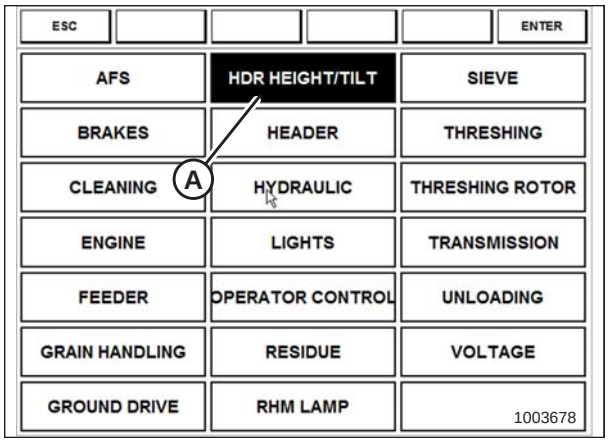

Figure 4.43: Case 8010 Combine Display

5. Select LEFT SEN (A). The exact voltage is displayed. Raise and lower header to see full range of voltage readings.

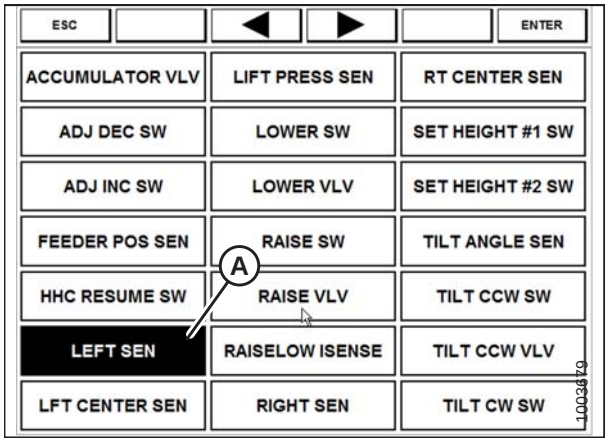

Figure 4.44: Case 8010 Combine Display

6. If sensor voltage is not within low and high limits shown in *4.4 Height Sensor Output Voltage Range – Combine Requirements, page 103*, or if range between low and high limits is insufficient, you need to make adjustments. For instructions, refer to *4.4.2 Adjusting Header Height Sensor Voltage Range (Left Side), page 106* and *4.4.3 Adjusting Header Height Sensor Voltage Range (Right Side), page 106*.

Figure 4.45: Case 8010 Combine Display

4.6.2 Checking Voltage Range from Combine Cab (Case IH 7010/8010; 7120/8120/9120; 7230/8230/9230; 7240/8240/9240)

NOTE:

Changes may have been made to the combine controls or display since this document was published. Refer to the combine operator's manual for updates.

CAUTION

Check to be sure all bystanders have cleared the area.

1. Raise header until header wheels are 150 mm (6 in.) above ground.
2. Select DIAGNOSTICS (A) on the MAIN page. The DIAGNOSTICS page opens.
3. Select SETTINGS. The SETTINGS page opens.

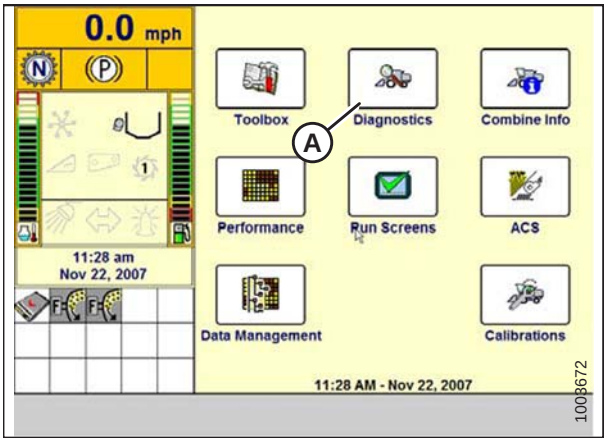

Figure 4.46: Case IH Combine Display

4. Select GROUP drop-down arrow (A). The GROUP dialog box displays.

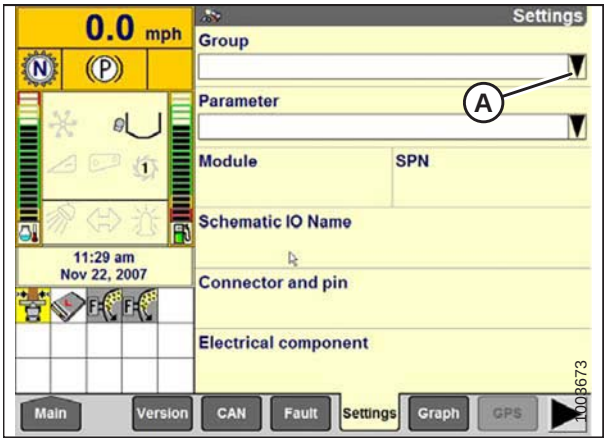

Figure 4.47: Case IH Combine Display

5. Select HEADER HEIGHT/TILT (A). The PARAMETER page opens.

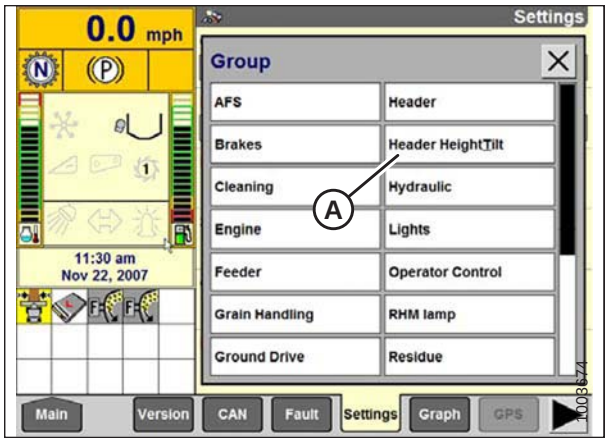

Figure 4.48: Case IH Combine Display

6. Select LEFT HEADER HEIGHT SEN (A), and then select GRAPH button (B). The exact voltage is displayed at top of the page. Raise and lower the header to see the full range of voltage readings.

7. If the sensor voltage is not within the low and high limits shown in *4.4 Height Sensor Output Voltage Range – Combine Requirements, page 103*, or if the range between the low and high limits is insufficient, make adjustments. For instructions, refer to *4.4.2 Adjusting Header Height Sensor Voltage Range (Left Side), page 106* and *4.4.3 Adjusting Header Height Sensor Voltage Range (Right Side), page 106*.

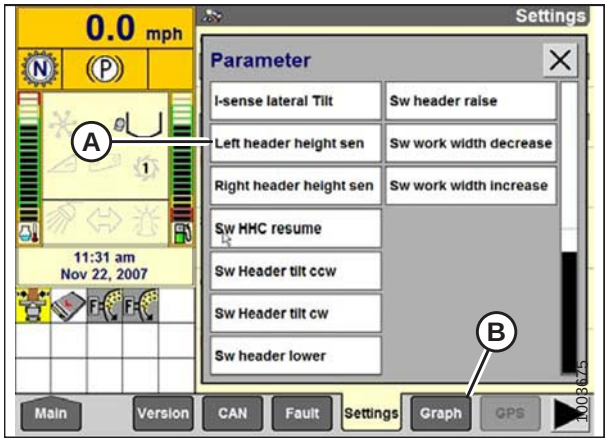

Figure 4.49: Case IH Combine Display

4.6.3 Calibrating Auto Header Height Control (Case IH 7010/8010; 7120/8120/9120; 7230/8230/9230; 7240/8240/9240)

NOTE:

This procedure applies to combines with a software version below 28.00. For instructions on calibrating the AHHC for combines with software version 28.00 or above, refer to *4.6.4 Calibrating Auto Header Height Control (Case IH Combines with Version 28.00 or Higher Software), page 120*.

NOTE:

Changes may have been made to the combine controls or display since this document was published. Refer to combine operator's manual for updates.

1. Ensure all header electrical and hydraulic connections are made.

2. Select TOOLBOX on the MAIN page, and then select HEADER.

3. Set appropriate HEADER STYLE.

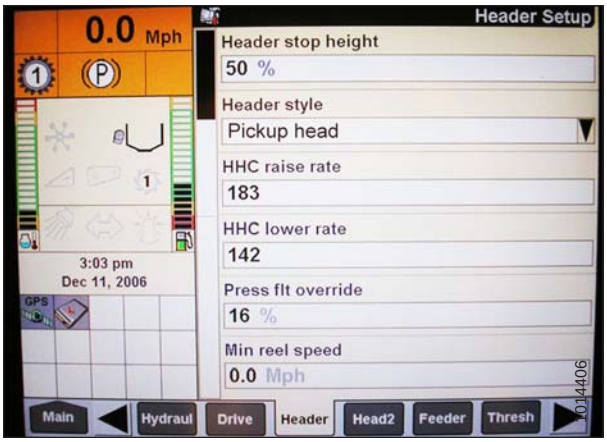

Figure 4.50: Case IH Combine Display

4. Set AUTO REEL SPEED SLOPE.
5. Set HEADER PRESSURE FLOAT to NO (A) if equipped, and ensure REEL DRIVE is set to HYDRAULIC (B).

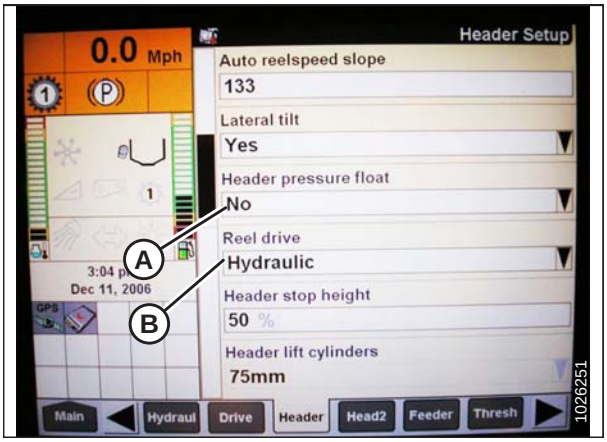

Figure 4.51: Case IH Combine Display

6. Select YES (A) from the REEL FORE-BACK list (if applicable).
7. Set HEIGHT SENSITIVITY (B) to desired value. The recommended starting point is 180.

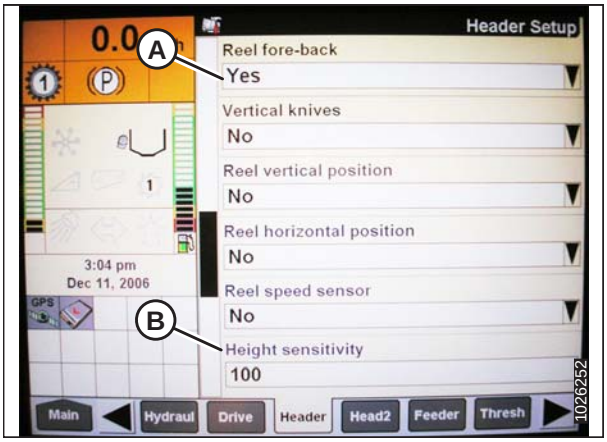

Figure 4.52: Case IH Combine Display

8. Select YES for FORE-AFT CONTROL (A) and HDR FORE-AFT TILT (B) (if applicable).

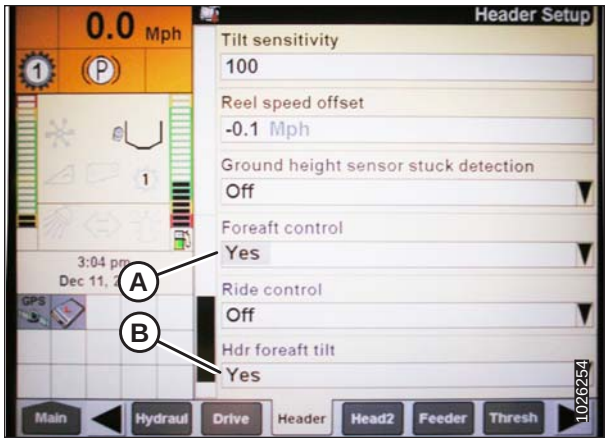

Figure 4.53: Case IH Combine Display

9. Select the HEAD2 tab at the bottom of the page.
10. Ensure PICKUP (A) is selected from the HEADER TYPE list.

    NOTE:

    If the recognition resistor is plugged into the header harness, you will not be able to change the header type.

11. Set cutting type to PLATFORM (B).
12. Set appropriate HEADER WIDTH (C) and HEADER USAGE (D).

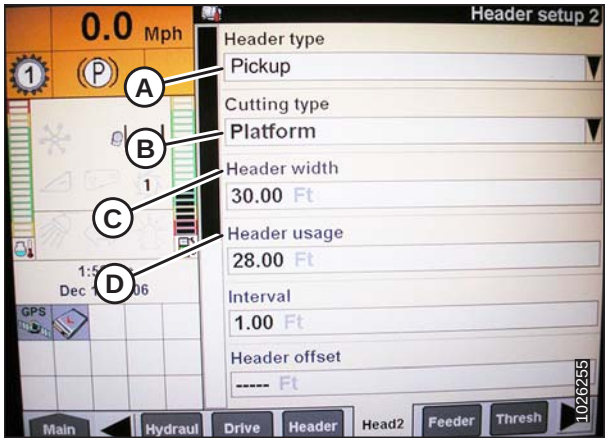

Figure 4.54: Case IH Combine Display

4.6.4 Calibrating Auto Header Height Control (Case IH Combines with Version 28.00 or Higher Software)

NOTE:

Changes may have been made to combine controls or display since this document was published. Refer to combine operator's manual for updates.

1. Select TOOLBOX on the MAIN page, and then select HEADER SETUP.
2. Locate HEADER SUB TYPE field. It will be located on either the HEAD 1 or HEAD 2 tab found at bottom of display.
3. Select 2000 (A).

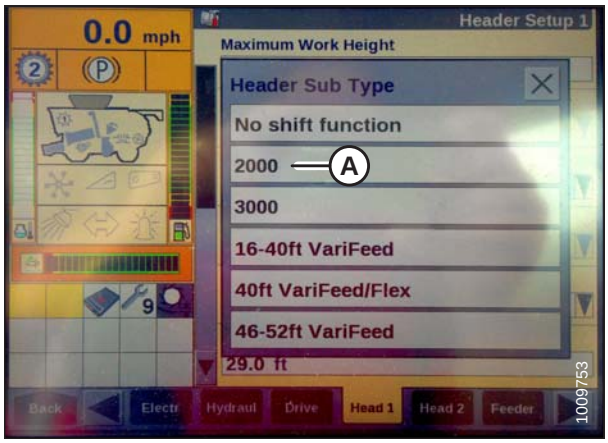

Figure 4.55: Case IH Combine Display

4. Locate the HEADER SENSORS and HEADER PRESSURE FLOAT fields. They will be located on either the HEAD 1 or the HEAD 2 tab found at bottom of display.
5. Select ENABLE (A) in the HEADER SENSORS field.
6. Select NO (B) in HEADER PRESSURE FLOAT field.

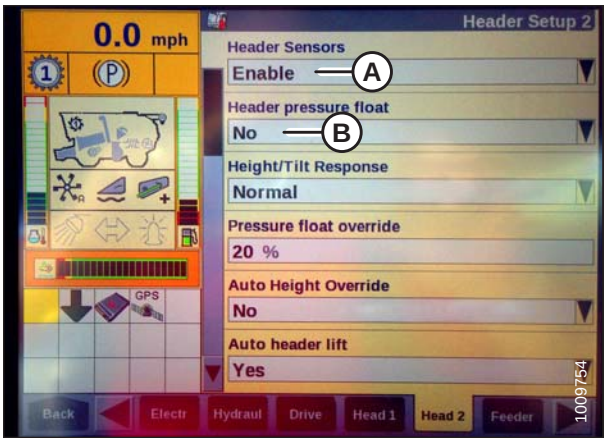

Figure 4.56: Case IH Combine Display

7. Engage separator and header, and press preset 1 or 2.
8. Ensure AUTO HEIGHT icon (A) appears on display and is shown at location (B) as shown. When the header is set for cutting on the ground, this verifies that the combine is using the potentiometers on the header correctly to sense ground pressure.

   NOTE:

   AUTO HEIGHT field (B) may appear on any of the RUN tabs and not necessarily on RUN 1 tab.

Figure 4.57: Case IH Combine Display

9. Select CALIBRATION on the combine display, and press the right arrow navigation key to enter the information box.
10. Select HEADER (A), and press ENTER. The CALIBRATION dialog box opens.

    NOTE:

    You can use up and down navigation keys to move between options.

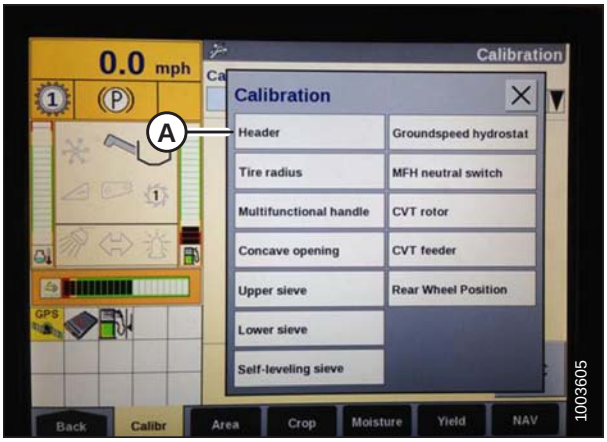

Figure 4.58: Case IH Combine Display

11. Follow calibration steps in the order they appear in the dialog box. As you proceed through the calibration process, the display will automatically update to show the next procedure step.

    NOTE:

    The calibration procedure will stop if the system sits idle for more than 3 minutes, or if the ESC key is pressed during any step.

    NOTE:

    Refer to your combine operator's manual for an explanation of any error codes encountered.

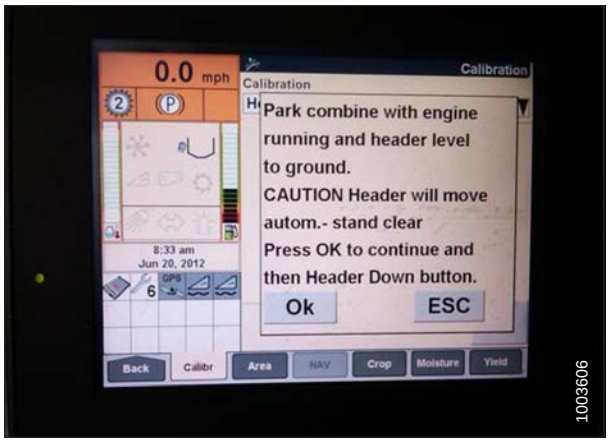

Figure 4.59: Case IH Combine Display

12. When all the steps have been completed, CALIBRATION SUCCESSFUL is displayed on the page. Exit the CALIBRATION menu by pressing the ENTER or ESC key.

    NOTE:

    If float was set heavier to complete ground calibration procedure, adjust to recommended operating float after calibration is complete.

13. If the unit does not function properly, conduct maximum stubble height calibration.

4.6.5 Setting Preset Cutting Height (Case 7010/8010, 7120/8120/9120, 7230/8230/9230, 7240/8240/9240)

To set preset cutting height, follow these steps:

NOTE:

Changes may have been made to the combine controls or display since this document was published. Refer to the combine operator's manual for updates.

CAUTION

Check to be sure all bystanders have cleared the area.

1. Engage the separator and header.
2. Manually raise or lower the header to the desired cutting height.
3. Press SET #1 switch (A). The HEADER HEIGHT MODE light (C) (next to SET #1 switch) turns on.
4. Manually raise or lower the header to a second desired cutting height.
5. Press SET #2 switch (B). The HEADER HEIGHT MODE light (D) (next to SET #2 switch) turns on.

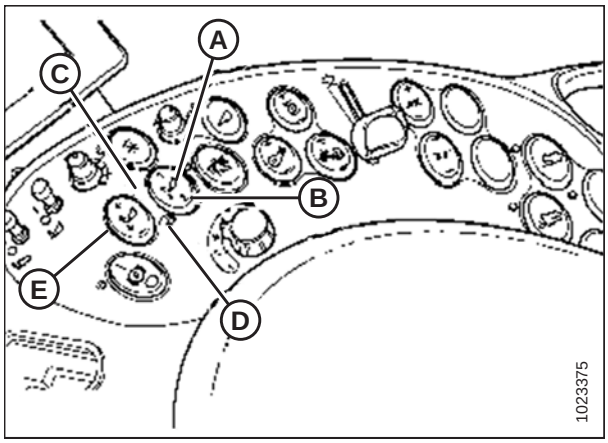

Figure 4.60: Case Combine Controls

A - Set #1 Switch
B - Set #2 Switch
C - Header Height Mode Light
D - Header Height Mode Light
E - Fine Adjust Switch

6. To swap between set points, press HEADER RESUME (A).
7. To pick up header at headlands, press HEADER RESUME (A) twice. To lower, press HEADER RESUME (A).

   NOTE:

   You can adjust these set points by using FINE ADJUST switch (E) in Figure *4.60, page 122*.

   NOTE:

   Pressing the HEADER RAISE/LOWER switch will disengage AUTO HEIGHT mode. Press HEADER RESUME to re-engage.

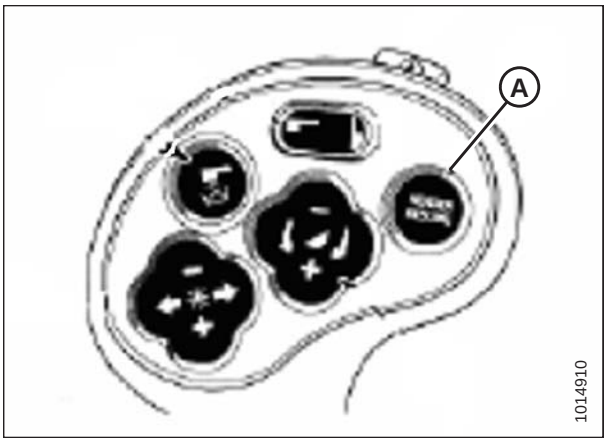

Figure 4.61: Case Combine Controls

4.7 John Deere 60 Series Combines

4.7.1 Checking Voltage Range from Combine Cab (John Deere 60 Series)

The auto header height sensor output must be within a specific range, or feature will not work properly.

Check sensor's output voltage range from combine cab according to instructions that follow.

NOTE:

Changes may have been made to combine controls or display since this document was published. Refer to combine operator's manual for updates.

CAUTION

Check to be sure all bystanders have cleared the area.

1. Raise header until header wheels are 150 mm (6 in.) above ground.

Figure 4.62: John Deere Combine Display

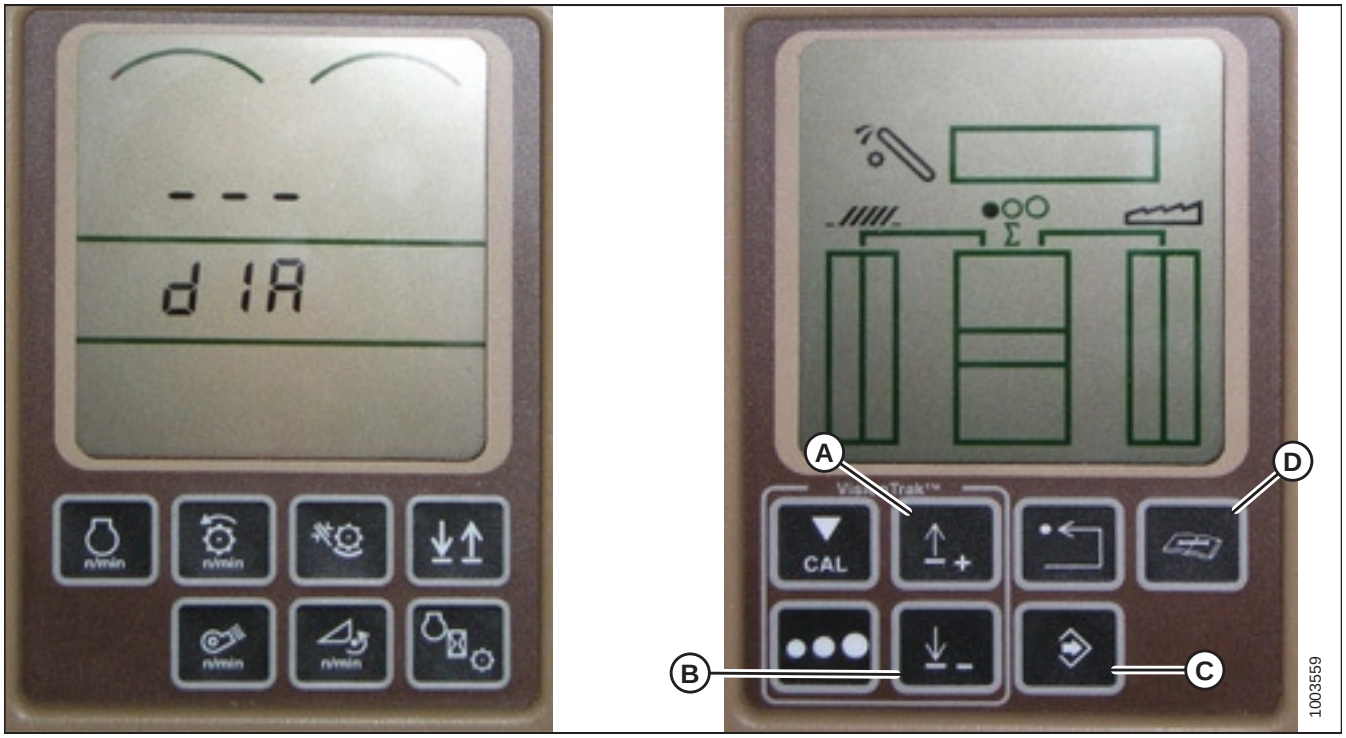

2. Press diagnostic button (D) on HHS monitor (the button with open book with wrench on top of it). dIA appears on monitor.
3. Press up button (A) until EO1 appears on monitor (these are header adjustments).
4. Press ENTER button (C).
5. Press up (A) or down (B) until 22 is displayed on top portion of monitor. This is voltage reading of sensor.
6. Start combine and lower feeder house to ground until feeder house stops moving.

   NOTE:

   You may need to hold HEADER DOWN switch for a few seconds to ensure feeder house is entirely down.

7. Check sensor reading on monitor.

8. Raise header so it is just off ground and check sensor reading again.
9. If sensor voltage is not within low and high limits shown in *4.4 Height Sensor Output Voltage Range – Combine Requirements, page 103*, or if range between low and high limits is insufficient, you need to make adjustments. For instructions, refer to *4.4.2 Adjusting Header Height Sensor Voltage Range (Left Side), page 106* and *4.4.3 Adjusting Header Height Sensor Voltage Range (Right Side), page 106*.

4.7.2 Calibrating Auto Header Height Control (John Deere 60 Series)

NOTE:

Changes may have been made to combine controls or display since this document was published. Refer to combine operator's manual for updates.

CAUTION

Check to be sure all bystanders have cleared the area.

1. Start combine.
2. Press DIAGNOSTIC button (A) on monitor. DIA appears on monitor.
3. Press CAL button (B). DIA-CAL appears on monitor.

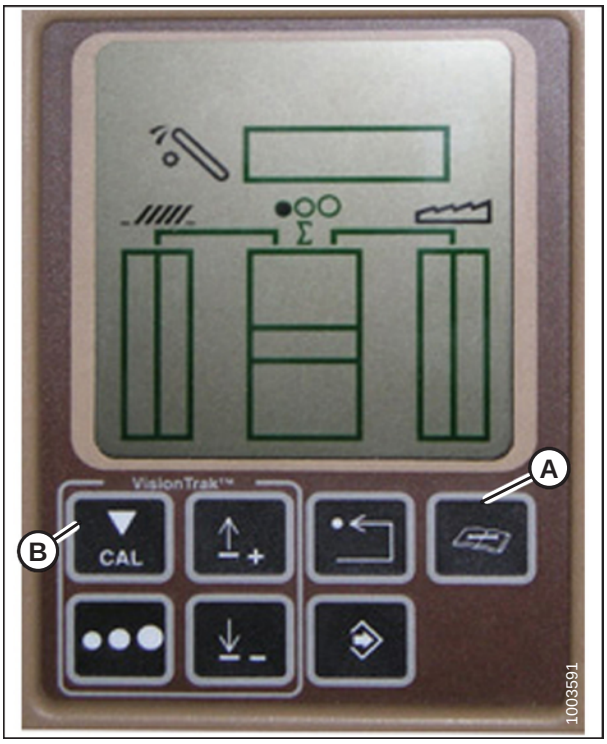

Figure 4.63: John Deere Combine Display

4. Press UP or DOWN buttons until HDR appears on monitor.
5. Press ENTER button. HDR H-DN appears on monitor.
6. Fully lower feeder house to ground.

   NOTE:

   You may need to hold HEADER DOWN switch for a few seconds to ensure feeder house is fully lowered.

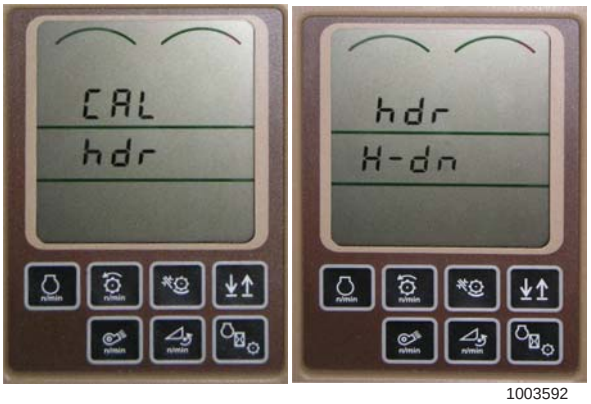

Figure 4.64: John Deere Combine Display

7. Press CAL button (A) to save calibration of header. HDR H-UP appears on monitor.
8. Raise header 1 m (3 ft.) off the ground, and press CAL (A) button. EOC appears on monitor.
9. Press ENTER button (B) to save calibration of header. Your AHHC is now calibrated.

   NOTE:

   If an error code appears during calibration, sensor is out of voltage range and will require adjustment. Refer to *4.7.2 Calibrating Auto Header Height Control (John Deere 60 Series), page 125*.

   NOTE:

   After calibration is complete, adjust combine operation settings to ensure proper field operation.

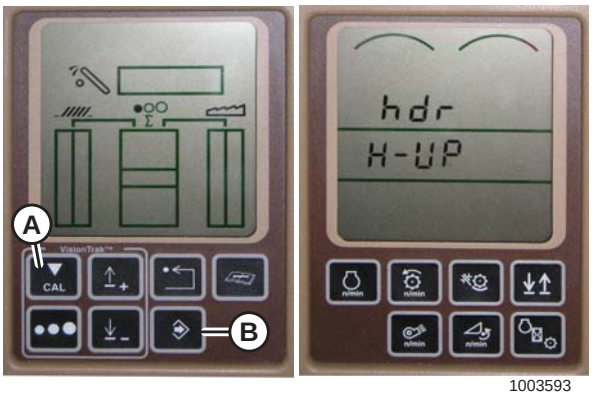

Figure 4.65: John Deere Combine Display

4.7.3 Turning Off Accumulator (John Deere 60 Series)

NOTE:

Changes may have been made to combine controls or display since this document was published. Refer to combine operator's manual for updates.

1. Press DIAGNOSTIC button (A) on monitor. DIA appears on the monitor.
2. Press UP button (B) until EO1 appears on monitor, and press ENTER (D). This is header adjustment.
3. Press UP (B) or DOWN (C) button until 132 is displayed on top portion of monitor. This is the accumulator reading.
4. Press ENTER (D) to select 132 as accumulator reading (this will allow you to change display to a three-digit number so it has a 0 in it, for example, x0x).
5. Press UP (B) or DOWN (C) button until desired number is displayed, and press CAL (E) button.
6. Press ENTER (D) to save changes. The accumulator is now deactivated.

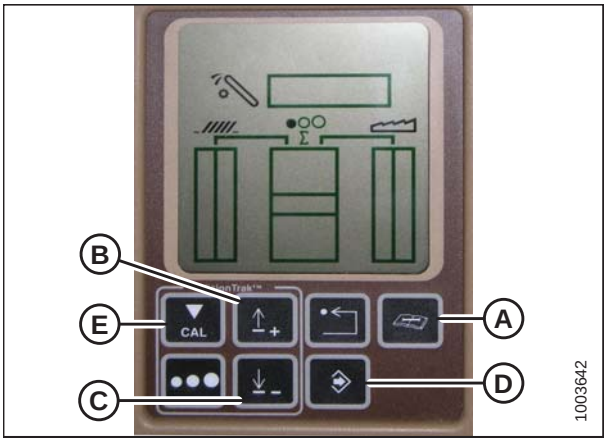

Figure 4.66: John Deere Combine Display

4.7.4 Setting Sensing Grain Header Height to 50 (John Deere 60 Series)

NOTE:

Changes may have been made to combine controls or display since this document was published. Refer to combine operator's manual for updates.

To set sensing grain header height, follow these steps:

1. Press DIAGNOSTIC button (A) on monitor. DIA appears on the monitor.
2. Press UP button (B) until EO1 appears on monitor, and press ENTER (D). This is header adjustment.
3. Press UP (B) or DOWN (C) button until 128 is displayed on top portion of monitor. This is the reading for the sensor.
4. Press ENTER (D) to select 128 as sensor reading (this will allow you to change display to a three-digit number so it has a 50 in it).
5. Press UP (B) or DOWN (C) button until desired number is displayed, and press CAL (E) button.
6. Press ENTER (D) to save the changes. The height is now set.

   NOTE:

   Do **NOT** use active header float function (A) in combination with MacDon auto header height control (AHHC)—the two systems will counteract one another. The header symbol (B) on display should **NOT** have a wavy line under it and should appear exactly as shown on Active Header Control Display in Figure *4.68, page 127*.

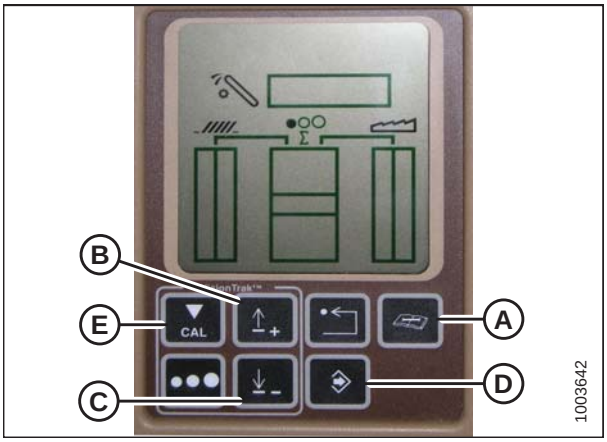

Figure 4.67: John Deere Combine Display

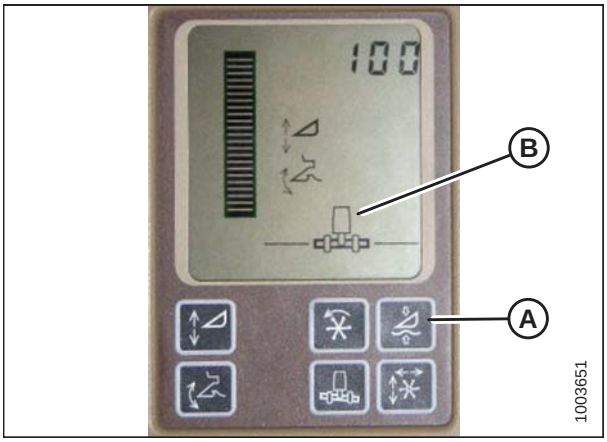

Figure 4.68: John Deere Combine Display

4.7.5 Setting Sensitivity of Auto Header Height Control (John Deere 60 Series)

This is also known as dead band adjustment.

NOTE:

Changes may have been made to combine controls or display since this document was published. Refer to combine operator's manual for updates.

1. Press DIAGNOSTIC button (A) on monitor. DIA appears on the monitor.
2. Press UP button (B) until EO1 appears on monitor, and press ENTER (D). This is header adjustment.
3. Press UP (B) or DOWN (C) button until 112 is displayed on monitor. This is your sensitivity setting.

   NOTE:

   The lower the reading, the higher the sensitivity. Ideal operating range is typically between 50 and 80.
4. Press ENTER (D) to select 112 as sensitivity setting (this will allow you to change first digit of number sequence).
5. Press UP (B) or DOWN (C) until desired number is displayed, then press CAL (E) button. This will bring you to second digit. Repeat this procedure until desired setting is achieved.
6. Press ENTER (D) to save changes.

   NOTE:

   The numbers depicted on displays in these illustrations are for reference purposes only; they are not intended to represent specific settings for your equipment.

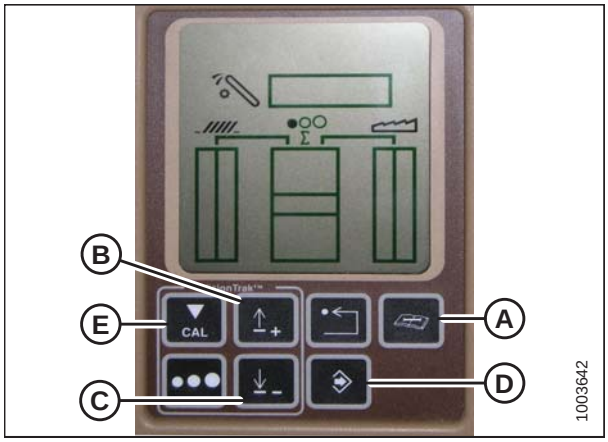

Figure 4.69: John Deere Combine Display

4.7.6 Adjusting Threshold for Drop Rate Valve (John Deere 60 Series)

This procedure explains how to adjust the point at which the restrictor valve opens and allows full flow to lift cylinders.

NOTE:

Changes may have been made to combine controls or display since this document was published. Refer to combine operator's manual for updates.

1. Press DIAGNOSTIC button (A) on monitor. DIA appears on the monitor.
2. Press UP button (B) until EO1 appears on monitor and press ENTER (C). This is header adjustment.
3. Press UP (B) or DOWN button (D) until 114 is displayed on top portion of monitor. This is the setting that adjusts when fast drop rate starts with respect to dead band.

   NOTE:

   The default setting is 100. Ideal operating range is typically between 60 and 85.
4. Press ENTER (C) to select 114 as fast drop rate (this will allow you to change first digit of number sequence).

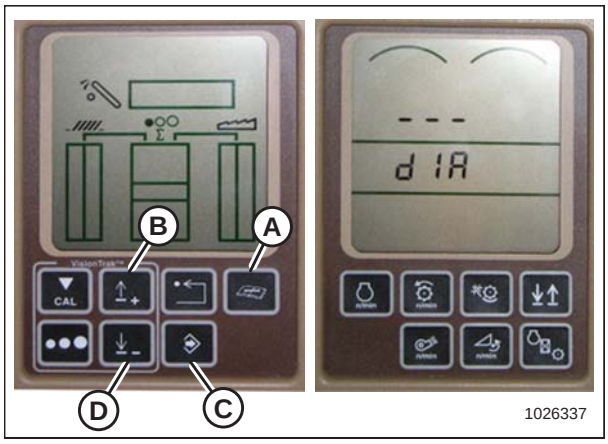

Figure 4.70: John Deere Combine Display

5. Press UP (A) or DOWN (B) until desired number is displayed, then press CAL button (C). This will bring you to second digit. Repeat this procedure until desired setting is achieved.
6. Press ENTER (D) to save changes.

NOTE:

The numbers depicted on displays in these illustrations are for reference purposes only; they are not intended to represent specific settings for your equipment.

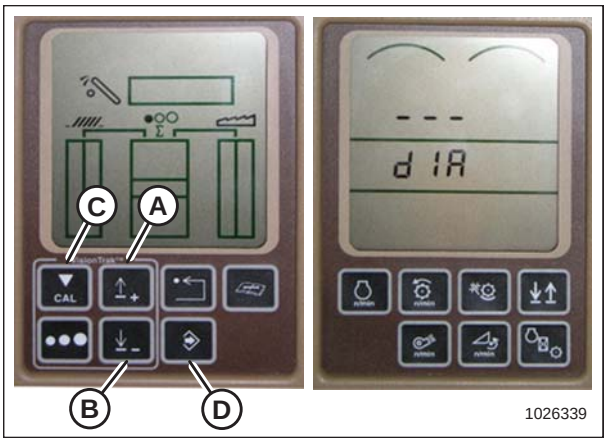

Figure 4.71: John Deere Combine Display

4.8 John Deere 70 Series Combines

4.8.1 Checking Voltage Range from Combine Cab (John Deere 70 Series)

The auto header height sensor output must be within a specific range, or feature will not work properly.

Check sensor's output voltage range from combine cab according to instructions that follow.

NOTE:

Changes may have been made to combine controls or display since this document was published. Refer to combine operator's manual for updates.

CAUTION

Check to be sure all bystanders have cleared the area.

1. Raise header until header wheels are 150 mm (6 in.) above ground.
2. If sensor voltage is not within low and high limits shown in *4.4 Height Sensor Output Voltage Range – Combine Requirements, page 103*, or if range between low and high limits is insufficient, you need to make adjustments. For instructions, refer to *4.4.2 Adjusting Header Height Sensor Voltage Range (Left Side), page 106* and *4.4.3 Adjusting Header Height Sensor Voltage Range (Right Side), page 106*.

4.8.2 Calibrating Feeder House Speed (John Deere 70 Series)

The feeder house speed must be calibrated before you calibrate auto header height control (AHHC) system. Refer to combine operator's manual for instructions.

4.8.3 Calibrating Auto Header Height Control (John Deere 70 Series)

NOTE:

Changes may have been made to combine controls or display since this document was published. Refer to combine operator's manual for updates.

CAUTION

Check to be sure all bystanders have cleared the area.

1. Start combine.
2. Press button located fourth from left along top of monitor (A) to select icon that resembles an open book with a wrench on it (B).
3. Press button (A) a second time to enter diagnostics and calibration mode.

Figure 4.72: John Deere Combine Display

4. Select HEADER in box (A) by scrolling down to box using the scroll knob, and then by pressing the check mark button.

   NOTE:

   The knob and button are shown in figures at right.

5. Scroll down to the lower right icon that resembles an arrow in a diamond (B) and press the check mark button to select it.

6. Follow the steps listed on the combine display to perform the calibration.

   NOTE:

   If an error code appears on page, then the sensor is not in the correct working range. Refer to *4.8.1 Checking Voltage Range from Combine Cab (John Deere 70 Series), page 130* to check and adjust range.

Figure 4.73: John Deere Combine Display

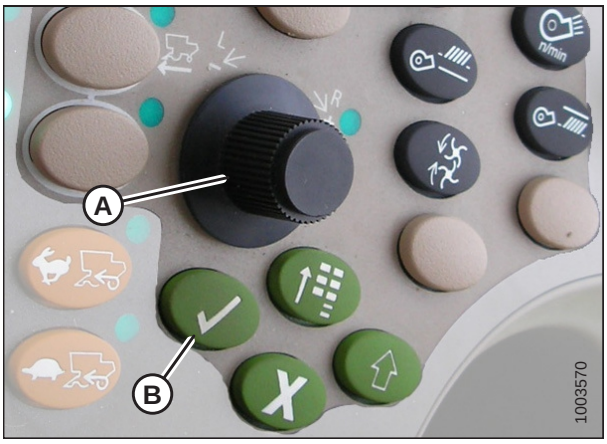

Figure 4.74: John Deere Combine Control Console

A - Scroll Knob **B - Check Mark Button**

4.8.4 Setting Sensitivity of Auto Header Height Control (John Deere 70 Series)

NOTE:

Changes may have been made to combine controls or display since this document was published. Refer to combine operator's manual for updates.

1. Press button (A) twice and current sensitivity setting will appear on combine display (the lower the reading, the lower the sensitivity).
2. Use scroll knob (B) to adjust sensitivity setting. The adjustment will be saved automatically.

   NOTE:

   If page remains idle for a short period of time, it will automatically return to previous page. Pressing check mark button (C) also will return combine display to previous page.

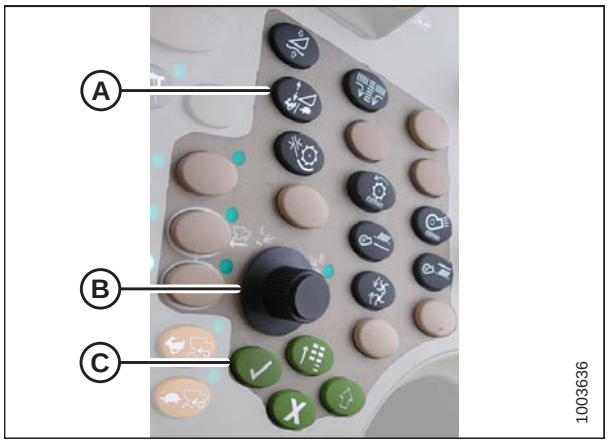

Figure 4.75: John Deere Combine Control Console

NOTE:

The numbers depicted on displays in these illustrations are for reference purposes only; they are not intended to represent specific settings for your equipment.

Figure 4.76: John Deere Combine Display

4.8.5 Adjusting Manual Header Raise/Lower Rate (John Deere 70 Series)

NOTE:

Changes may have been made to combine controls or display since this document was published. Refer to combine operator's manual for updates.

1. Press button (A) and current raise/lower rate setting will appear on monitor (the lower reading, slower rate).
2. Use scroll knob (B) to adjust rate. The adjustment will be saved automatically.

   NOTE:

   If page remains idle for a short period of time, it will automatically return to previous page. Pressing check mark button (C) will also return monitor to previous page.

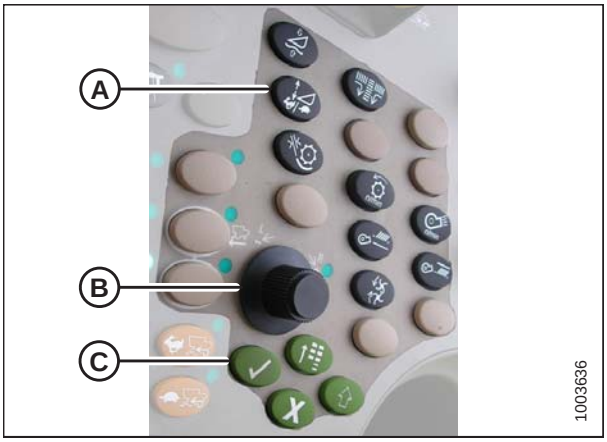

Figure 4.77: John Deere Combine Control Console

NOTE:

The numbers depicted on displays in these illustrations are for reference purposes only; they are not intended to represent specific settings for your equipment.

Figure 4.78: John Deere Combine Display

4.9 John Deere S and T Series Combines

4.9.1 Checking Voltage Range from Combine Cab (John Deere S and T Series)

The auto header height sensor output must be within a specific range, or feature will not work properly.

Check sensor's output voltage range from combine cab according to instructions that follow.

NOTE:

Changes may have been made to combine controls or display since this document was published. Refer to combine operator's manual for updates.

CAUTION

Check to be sure all bystanders have cleared the area.

1. Raise header until header wheels are 150 mm (6 in.) above ground.
2. Start combine and fully lower feeder house to the ground.

   NOTE:

   You may need to hold HEADER DOWN switch for a few seconds to ensure feeder house is fully lowered.
3. Check sensor reading on monitor.
4. If sensor voltage is not within low and high limits shown in *4.4 Height Sensor Output Voltage Range – Combine Requirements, page 103*, or if range between low and high limits is insufficient, you need to make adjustments. For instructions, refer to *4.4.2 Adjusting Header Height Sensor Voltage Range (Left Side), page 106* and *4.4.3 Adjusting Header Height Sensor Voltage Range (Right Side), page 106*.

4.9.2 Calibrating Feeder House Fore-Aft Tilt Range (John Deere S and T Series)

This procedure applies only to model year 2015 and later John Deere S and T Series combines.

NOTE:

Changes may have been made to the combine controls or display since this document was published. Refer to the combine operator's manual for updates.

The feeder house fore-aft tilt is controlled by buttons C (C) and D (D) at back of hydro handle.

Figure 4.79: John Deere Hydro Handle

NOTE:

The feeder house fore-aft tilt controls can be changed to work with buttons E and F by pressing hydro handle icon (A) and then selecting FEEDER HOUSE FORE/AFT TILT from drop-down menu (B) on combine display.

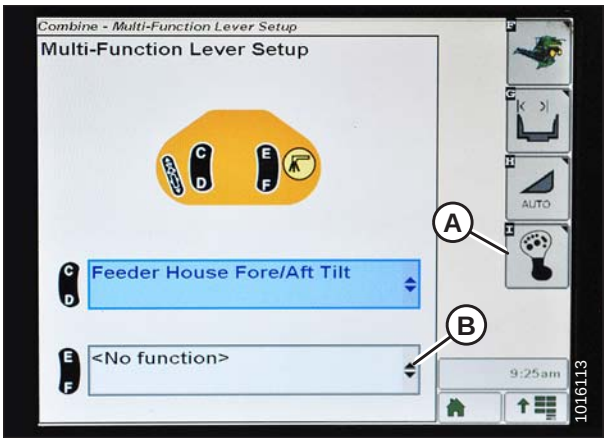

Figure 4.80: John Deere Combine Display

To calibrate feeder house fore-aft tilt range, follow these steps:

1. Press DIAGNOSTIC icon (A) on main page of combine display. The CALIBRATION page displays.

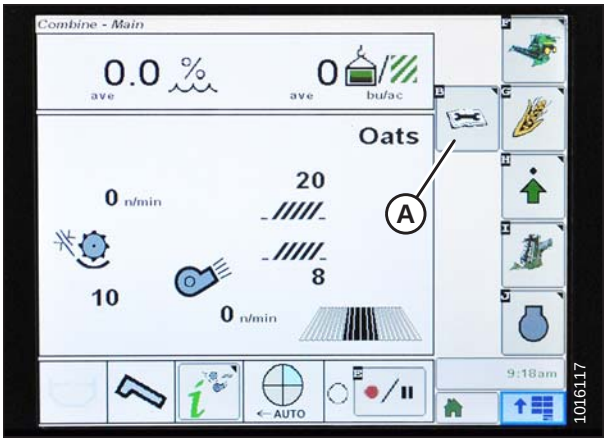

Figure 4.81: John Deere Combine Display

2. Select CALIBRATIONS drop-down menu (A) to view list of calibration options.

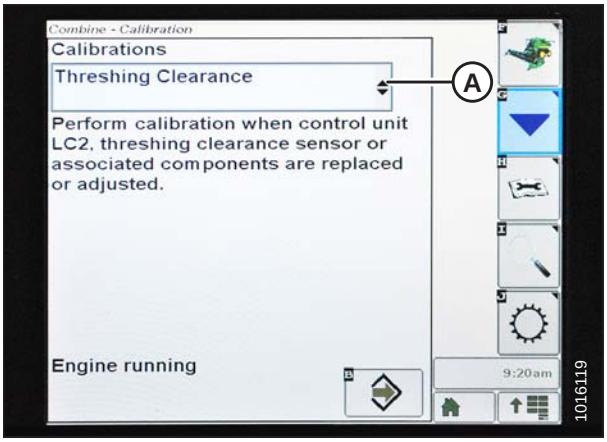

Figure 4.82: John Deere Combine Display

3. Press arrow (A) to cycle up through calibration options and select FEEDER HOUSE FORE/AFT TILT RANGE.

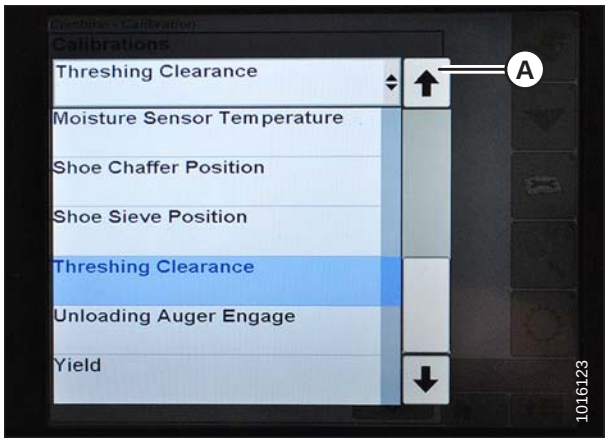

Figure 4.83: John Deere Combine Display

4. Press ENTER icon (A).

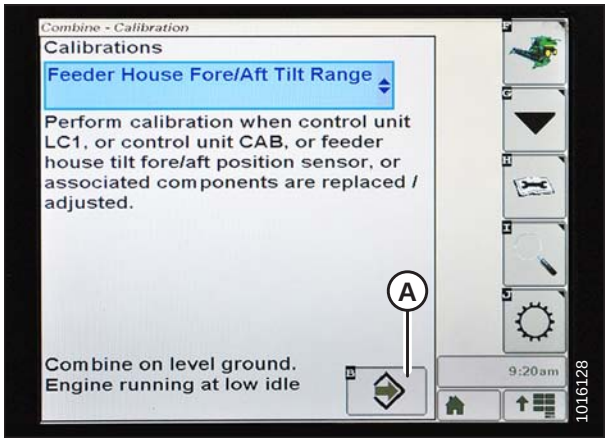

Figure 4.84: John Deere Combine Display

5. Follow instructions that appear on combine display. As you proceed through calibration process, display will automatically update to show next step.

   NOTE:

   If an error code appears during calibration, sensor is out of voltage range and will require adjustment. Refer to *4.9.1 Checking Voltage Range from Combine Cab (John Deere S and T Series), page 134*.

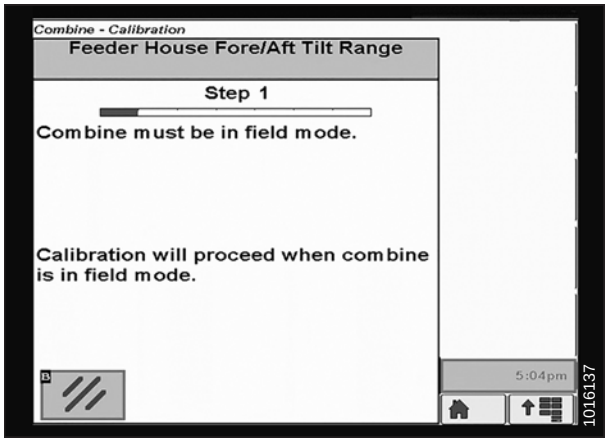

Figure 4.85: John Deere Combine Display

4.9.3 Calibrating Auto Header Height Control (John Deere S and T Series)

NOTE:

Changes may have been made to combine controls or display since this document was published. Refer to combine operator's manual for updates.

1. Press DIAGNOSTIC icon (A) on main page of monitor. The CALIBRATION page appears.

Figure 4.86: John Deere Combine Display

2. Select THRESHING CLEARANCE (A) and a list of calibration options appears.

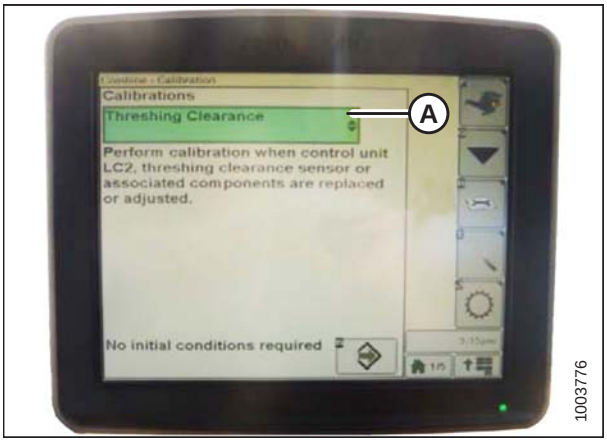

Figure 4.87: John Deere Combine Display

3. Select FEEDER HOUSE SPEED (A) and calibrate.
4. Select HEADER (B) and calibrate.

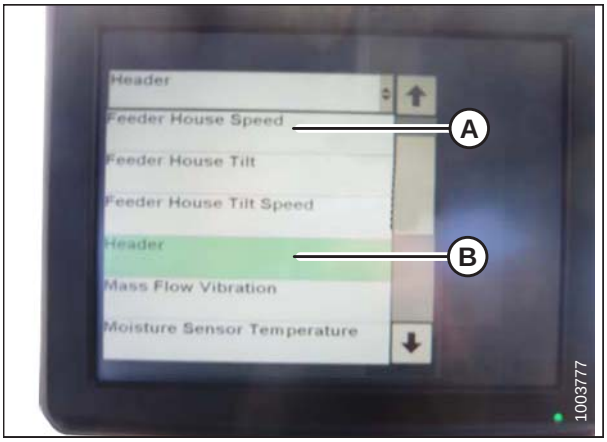

Figure 4.88: John Deere Combine Display

5. Press icon (A) with either FEEDER HOUSE SPEED or HEADER selected and icon will turn green.

   NOTE:

   Feeder house speed calibration must be done before header calibration.

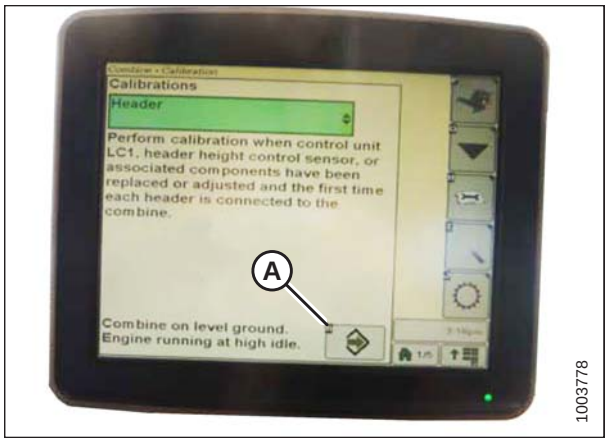

Figure 4.89: John Deere Combine Display

6. Click button (A) and instructions will appear on screen to guide you through remaining calibration steps.

   NOTE:

   If an error code appears during calibration, one or both sensors are out of voltage range and will require adjustment. Refer to *4.4.2 Adjusting Header Height Sensor Voltage Range (Left Side), page 106* and *4.4.3 Adjusting Header Height Sensor Voltage Range (Right Side), page 106*.

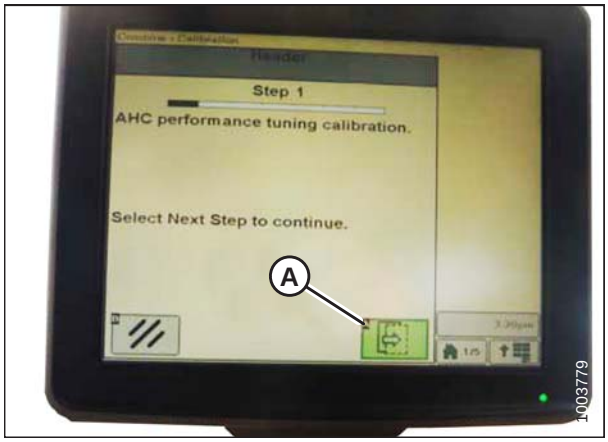

Figure 4.90: John Deere Combine Display

4.9.4 Setting Sensitivity of Auto Header Height Control (John Deere S and T Series)

NOTE:

Changes may have been made to combine controls or display since this document was published. Refer to combine operator's manual for updates.

1. Press button (A) twice and current sensitivity setting will appear on combine display.

Figure 4.91: John Deere Combine Command Center

2. Press **–** or **+** icon (A) to adjust rates.

   NOTE:

   The numbers depicted on displays in these illustrations are for reference purposes only; they are not intended to represent specific settings for your equipment.

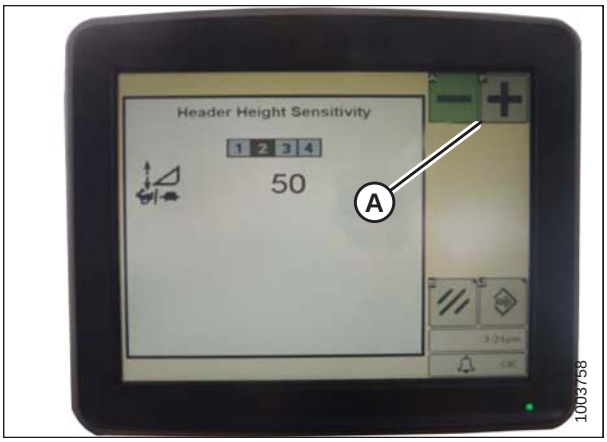

Figure 4.92: John Deere Combine Display

4.9.5 Adjusting Manual Header Raise/Lower Rate (John Deere S and T Series)

NOTE:

Changes may have been made to the combine controls or display since this document was published. Refer to combine operator's manual for updates.

1. Press button (A) and current sensitivity setting will appear on monitor.

Figure 4.93: John Deere Combine Command Center

2. Press **–** or **+** icon (A) to adjust rates.

   NOTE:

   The numbers depicted on displays in these illustrations are for reference purposes only; they are not intended to represent specific settings for your equipment.

Figure 4.94: John Deere Combine Display

4.9.6 Setting Preset Cutting Height (John Deere S and T Series)

NOTE:

Changes may have been made to combine controls or display since this document was published. Refer to combine operator's manual for updates.

1. Press COMBINE – HEADER SETUP icon (A) on main page. The COMBINE – HEADER SETUP page appears. This page is used to set various header settings such as reel speed, header width, and height of feeder house for acre counter engagement.

Figure 4.95: Combine Display

2. Select COMBINE – HEADER SETUP AHC icon (A). The COMBINE – HEADER SETUP AHC screen appears.

Figure 4.96: Combine Display

3. Select HEADER HEIGHT SENSING ENABLE (A), HEADER HEIGHT RESUME ENABLE (B), and REEL POSITION RESUME ENABLE (C) icons.

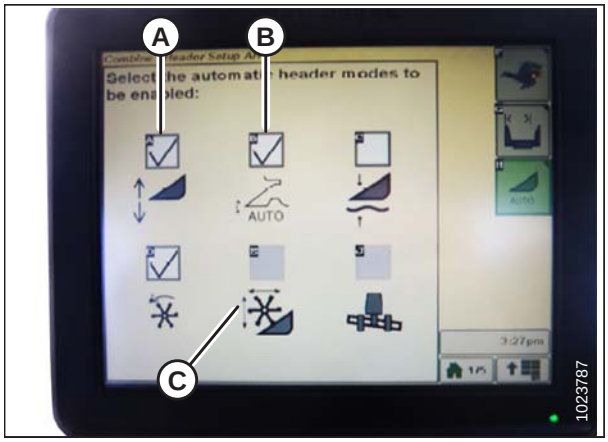

Figure 4.97: Combine Display

4. Turn on header engagement switch (A) and move header to desired preset position.
5. Position can be fine-tuned with HEADER HEIGHT PRESSURE CONTROL DIAL (B).

Figure 4.98: Combine Control Console

6. Hold joystick button 2 (B) until the AHHC icon flashes on monitor.
7. To store another preset, repeat Step *4, page 141* and Step *6, page 141* for button 3 (C).
8. Select an appropriate ground pressure setting:
   - Preset button 2 (B) on joystick for a light ground pressure setting in muddy or soft soil conditions
   - Preset button 3 (C) for a heavy ground pressure setting in harder soil conditions and a faster ground speed

   NOTE:

   Preset button 1 (A) is reserved for header lift on headland and is not used for ground cutting.

Figure 4.99: Joystick Buttons

NOTE:

When auto header height control (AHHC) is engaged, AHHC icon (A) appears on monitor and number indicating which button was pressed (B) is displayed on the screen.

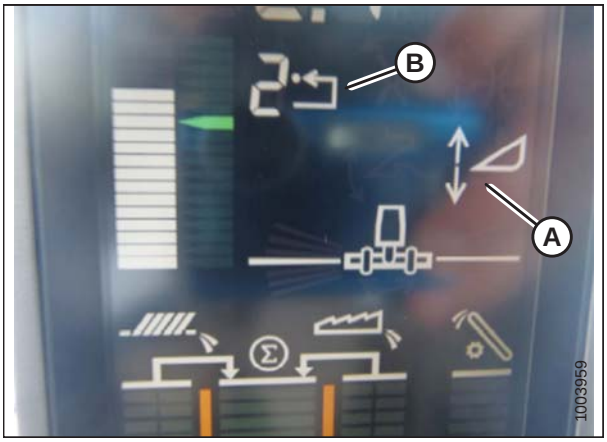

Figure 4.100: Combine Display

4.10 New Holland Combines CX/CR Series (CR Series – Model Year 2014 and Earlier)

NOTE:

For New Holland CR models 6.80, 6.90, 7.90, 8.90, 9.90, and 10.90, refer to *4.11 New Holland Combines (CR Series – Model Year 2015 and Later), page 150*.

4.10.1 Checking Voltage Range from Combine Cab (New Holland)

NOTE:

Changes may have been made to the combine controls or display since this document was published. Refer to the combine operator's manual for updates.

CAUTION

Check to be sure all bystanders have cleared the area.

1. Raise header until header wheels are 150 mm (6 in.) above ground.
2. Select DIAGNOSTICS (A) on main page. The DIAGNOSTICS page displays.
3. Select SETTINGS. The SETTINGS page displays.

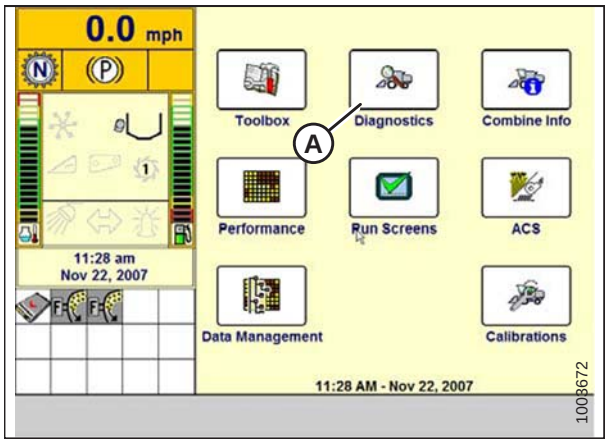

Figure 4.101: New Holland Combine Display

4. Select GROUP drop-down arrow (A). The GROUP dialog box displays.

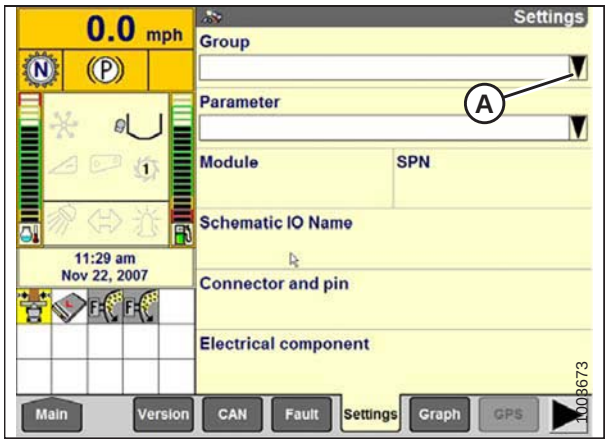

Figure 4.102: New Holland Combine Display

5. Select HEADER HEIGHT/TILT (A). The PARAMETER page displays.

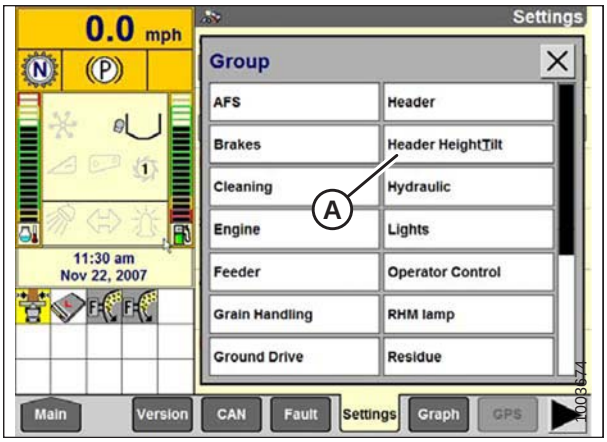

Figure 4.103: New Holland Combine Display

6. Select LEFT HEADER HEIGHT SEN (A), and then select GRAPH button (B). The exact voltage is displayed at top of page.
7. Raise and lower header to see full range of voltage readings.
8. If sensor voltage is not within low and high limits shown in *4.4 Height Sensor Output Voltage Range – Combine Requirements, page 103*, or if range between low and high limits is insufficient, you need to make adjustments. For instructions, refer to *4.4.2 Adjusting Header Height Sensor Voltage Range (Left Side), page 106* and *4.4.3 Adjusting Header Height Sensor Voltage Range (Right Side), page 106*.

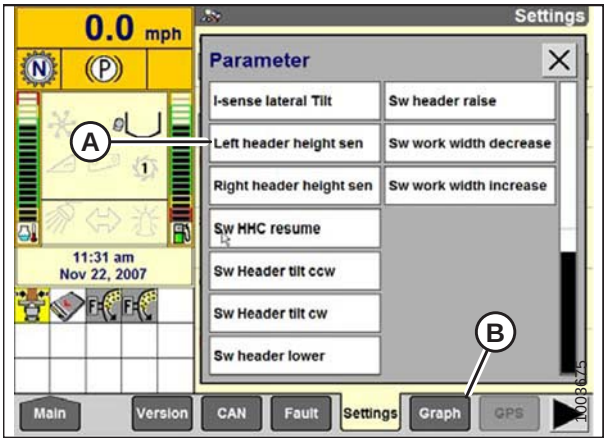

Figure 4.104: New Holland Combine Display

4.10.2 Engaging Auto Header Height Control (New Holland CR/CX Series)

NOTE:

Changes may have been made to the combine controls or display since this document was published. Refer to the combine operator's manual for updates.

1. Select HEADER LATERAL FLOAT on combine display, and press ENTER.
2. Use up and down navigation keys to move between options, and select INSTALLED.

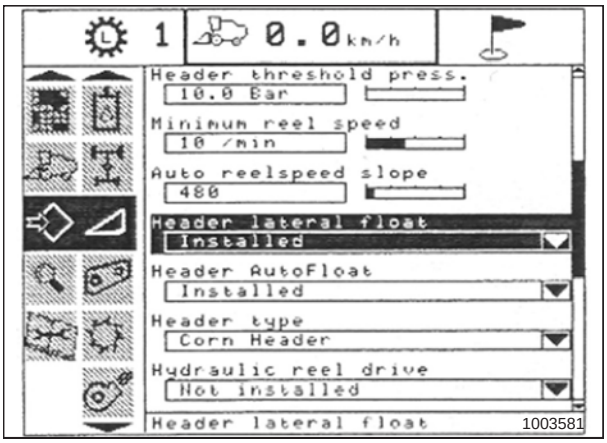

Figure 4.105: New Holland Combine Display

3. Select HEADER AUTOFLOAT, and press ENTER.
4. Use up and down navigation keys to move between options, and select INSTALLED.

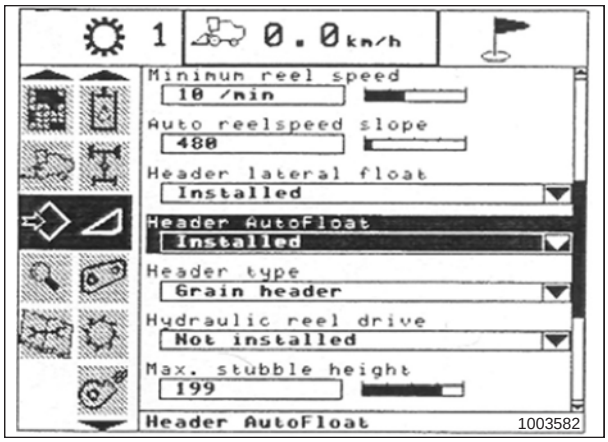

Figure 4.106: New Holland Combine Display

4.10.3 Calibrating Auto Header Height Control (New Holland CR/CX Series)

NOTE:

Changes may have been made to the combine controls or display since this document was published. Refer to the combine operator's manual for updates.

CAUTION

Check to be sure all bystanders have cleared the area.

Check the following conditions before starting the header calibration procedure:

- The header is attached to the combine.
- The combine is on level ground, with the header level to the ground.
- The engine is running.
- The combine is not moving.
- No faults have been received from the Header Height Controller (HHC) module.
- The header/feeder is disengaged.
- Lateral float buttons are **NOT** pressed.
- The ESC key is **NOT** pressed.

To calibrate the AHHC, follow these steps:

1. Select CALIBRATION on the combine display, and press the right arrow navigation key to enter the information box.

2. Select HEADER (A), and press ENTER. The CALIBRATION dialog box opens.

   NOTE:

   You can use the up and down navigation keys to move between options.

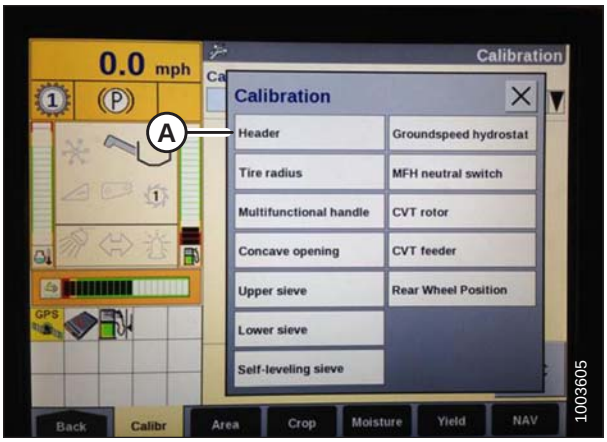

Figure 4.107: New Holland Combine Display

3. Follow the calibration steps in the order that they appear in the dialog box. As you proceed through the calibration process, the display will automatically update to show the next step.

   NOTE:

   Pressing the ESC key during any of the steps or letting the system sit idle for more than 3 minutes will stop the calibration process.

   NOTE:

   Refer to your combine operator's manual for an explanation of any error codes encountered.

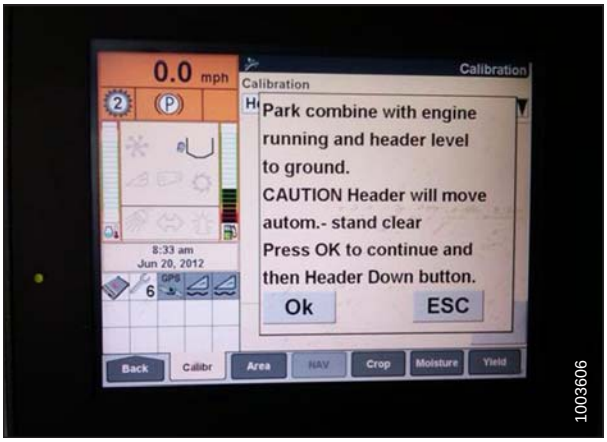

Figure 4.108: New Holland Combine Display

4. When all steps have been completed, a CALIBRATION SUCCESSFUL message is displayed on the page. Exit the CALIBRATION menu by pressing either the ENTER or ESC key.

   NOTE:

   If the float was set heavier to complete ground the calibration procedure, adjust to the recommended operating float after calibration is complete.

5. If the unit does not function properly, conduct maximum stubble height calibration.

Calibrating Maximum Stubble Height

This procedure describes how to calibrate the area counter to stop or start counting at the correct height. Program header to a height that will never be reached while cutting. The area counter will stop counting when header is above programmed height, and will begin counting when header is below programmed height.

Select height of header that corresponds to description above.

IMPORTANT:

- If value is set too low, area may **NOT** be counted since header is sometimes raised above this threshold although combine is still cutting.
- If value is set too high, area counter will keep counting even when header is raised (but below this threshold) and combine is no longer cutting crop.

CAUTION

Check to be sure all bystanders have cleared the area.

1. Select MAXIMUM STUBBLE HEIGHT calibration dialog box. As you proceed through calibration process, display will automatically update to show next step.

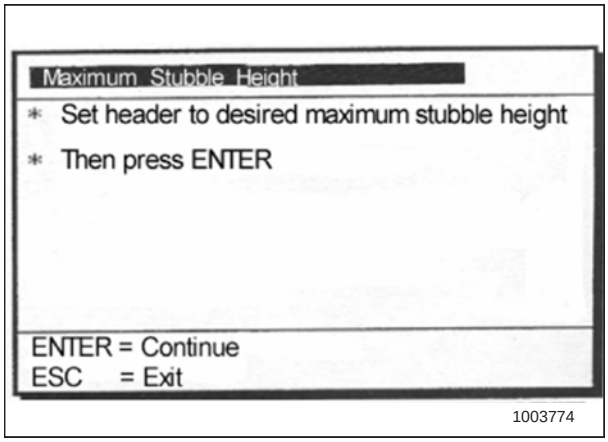

Figure 4.109: New Holland Calibration Dialog Box

2. Move header to correct position using header up or down control switch on multifunction handle.
3. Press ENTER to continue. As you proceed through calibration process, display will automatically update to show next step.
4. Press ENTER or ESC to close calibration page. The calibration is now complete.

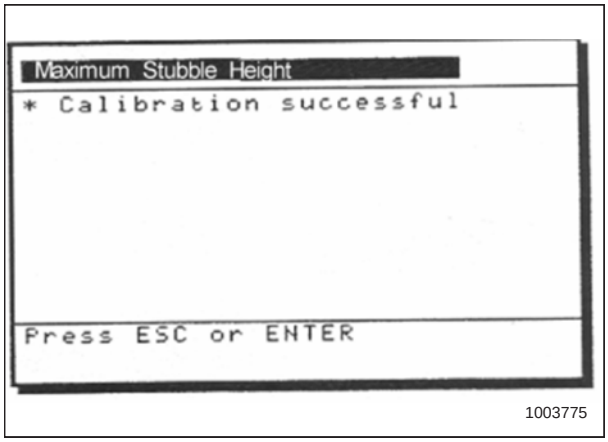

Figure 4.110: New Holland Calibration Dialog Box

4.10.4 Adjusting Header Raise Rate (New Holland CR/CX Series)

If necessary, header raise rate (the first speed on HEADER HEIGHT rocker switch of multifunctional handle) can be adjusted.

NOTE:

Changes may have been made to the combine controls or display since this document was published. Refer to combine operator's manual for updates.

1. Select HEADER RAISE RATE on combine display.
2. Use **+** or **–** buttons to change setting.
3. Press ENTER to save new setting.

   NOTE:

   The raise rate can be changed from 32 to 236 in increments of 34. The factory setting is 100.

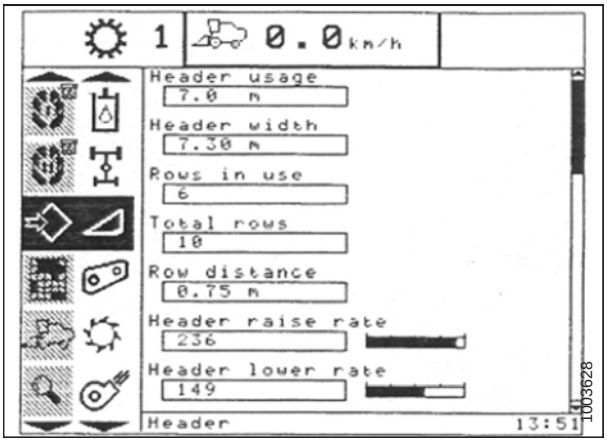

Figure 4.111: New Holland Combine Display

4.10.5 Setting Header Lower Rate to 50 (New Holland CR/CX Series)

The header lower rate can be adjusted using the automatic header height control (AHHC) button or second speed on the multifunction handle's header height rocker switch.

NOTE:

Changes may have been made to the combine controls or display since this document was published. Refer to combine operator's manual for updates.

1. Select HEADER LOWER RATE on combine display.
2. Use **+** or **–** buttons to change setting to 50.
3. Press ENTER to save new setting.

   NOTE:

   The lower rate can be changed from 2 to 247 in increments of 7. It is factory-set to 100.

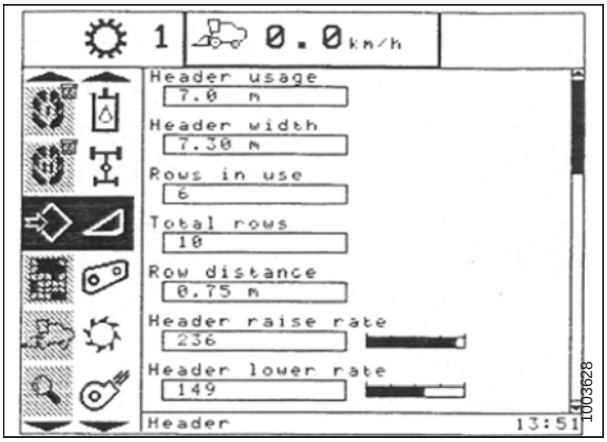

Figure 4.112: New Holland Combine Display

4.10.6 Setting Auto Header Height Control Sensitivity to 200 (New Holland CR/CX Series)

NOTE:

Changes may have been made to the combine controls or display since this document was published. Refer to combine operator's manual for updates.

CAUTION

Check to be sure all bystanders have cleared the area.

1. Engage threshing and feeder house.
2. Select HEIGHT SENSITIVITY on combine display screen.
3. Use + or – buttons to change setting to 200.
4. Press ENTER to save new setting.

   NOTE:

   The sensitivity can be changed from 10 to 250 in increments of 10. It is factory-set to 100.

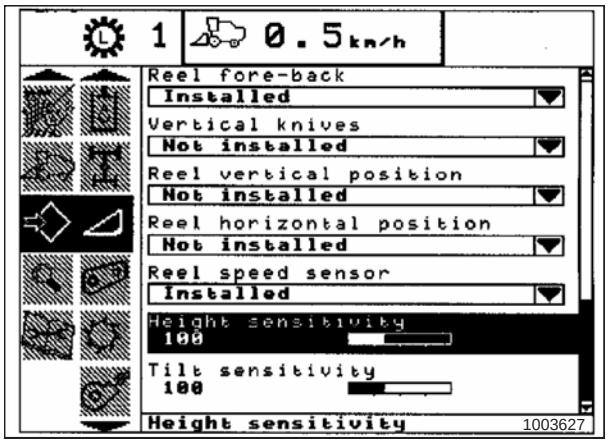

Figure 4.113: New Holland Combine Display

4.10.7 Setting Preset Cutting Height (New Holland CR/CX Series)

To set preset cutting height, follow these steps:

NOTE:

Changes may have been made to the combine controls or display since this document was published. Refer to combine operator's manual for updates.

1. Engage threshing mechanism and feeder with switches (A) and (B).
2. Set HEADER MEMORY rocker switch (D) in STUBBLE HEIGHT/AUTO FLOAT MODE.
3. Lower header to desired cutting height using HEADER HEIGHT AND HEADER LATERAL FLOAT rocker switch (C).
4. Press AUTOMATIC HEADER HEIGHT CONTROL button (E) for a minimum of 2 seconds to store height position. A beep will confirm setting.

   NOTE:

   It is possible to store two different header height values by using HEADER MEMORY rocker switch (D) in STUBBLE HEIGHT/AUTO FLOAT MODE.

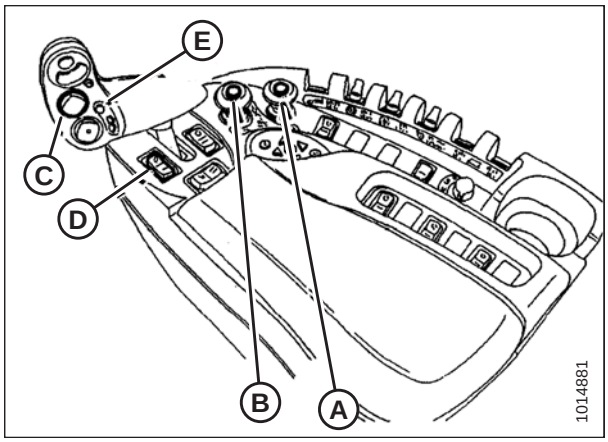

Figure 4.114: New Holland Combine Controls

5. To change one of the saved header height set points while the combine is in use, use HEADER HEIGHT AND HEADER LATERAL FLOAT rocker switch (A) (slow up/down) to raise or lower header to desired value. Press AUTOMATIC HEADER HEIGHT CONTROL button (B) for a minimum of 2 seconds to store new height position. A beep will confirm setting.

   NOTE:

   Do **NOT** press too hard on AUTOMATIC HEADER HEIGHT CONTROL button (B), or float mode will be disengaged.

   NOTE:

   It is not necessary to press rocker switch (C) again after adjusting.

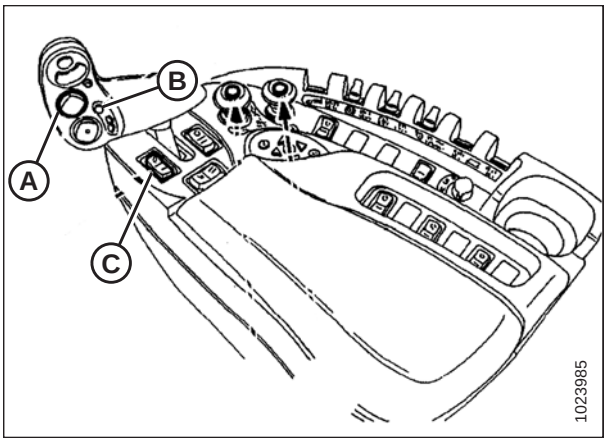

Figure 4.115: New Holland Combine Controls

4.11 New Holland Combines (CR Series – Model Year 2015 and Later)

This section applies only to 2015 and later CR models (6.80, 6.90, 7.90, 8.90, 9.90, and 10.90). For other New Holland combine models, refer to *4.10 New Holland Combines CX/CR Series (CR Series – Model Year 2014 and Earlier), page 142*.

4.11.1 Engaging Auto Header Height Control (New Holland CR Series)

This procedure applies only to 2015 and later CR models (6.80, 6.90, 7.90, 8.90, 9.90, and 10.90).

NOTE:

Changes may have been made to the combine controls or display since this document was published. Refer to the combine operator's manual for updates.

1. Select TOOLBOX (A) on main page. The TOOLBOX page displays.

Figure 4.116: New Holland Combine Display

NOTE:

On some older combine models, the Operator may have to simultaneously press both UNLOAD (A) and RESUME (B) buttons on hydro handle to access the TOOLBOX page.

Figure 4.117: New Holland Combine Controls

2. Select HEAD 1 (A). The HEADER SETUP 1 page displays. The HEADER TYPE field will automatically register as PICKUP (B).

   NOTE:

   The HEADER SUB TYPE menu (C) is not applicable to MacDon pickup headers. The menu's two selectable options (NO HYDR CONTROL and SPARE) have no effect on header performance.

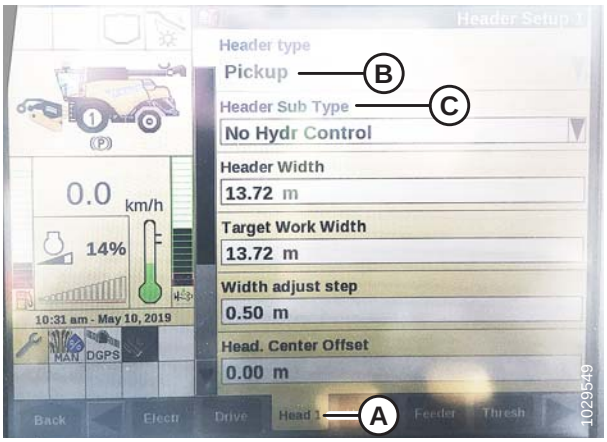

Figure 4.118: New Holland Combine Display

3. Select HEAD 2 (A). The HEADER SETUP 2 page displays.

Figure 4.119: New Holland Combine Display

4. Select AUTOFLOAT drop-down arrow and set AUTOFLOAT to INSTALLED (A).
5. Select AUTO HEADER LIFT drop-down arrow and set AUTO HEADER LIFT to INSTALLED (B).

   NOTE:

   With AUTO HEADER LIFT installed and AHHC engaged, header will lift up automatically when you pull back on hydro handle.

6. Set values for MANUAL HHC RAISE RATE (C) and MANUAL HHC LOWER RATE (D) for best performance according to ground conditions.

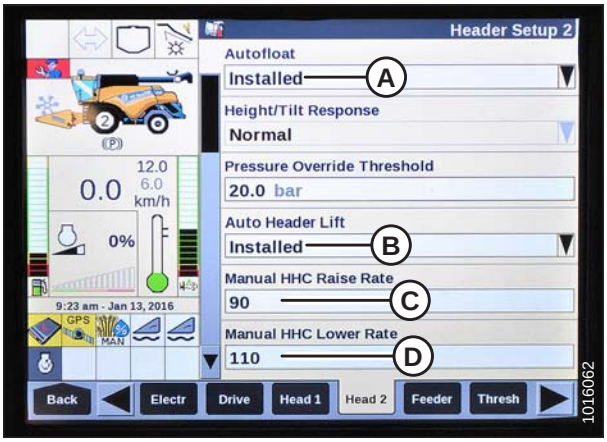

Figure 4.120: New Holland Combine Display

7. Set values for HHC HEIGHT SENSITIVITY (A) and HHC TILT SENSITIVITY (B) for best performance according to ground conditions.

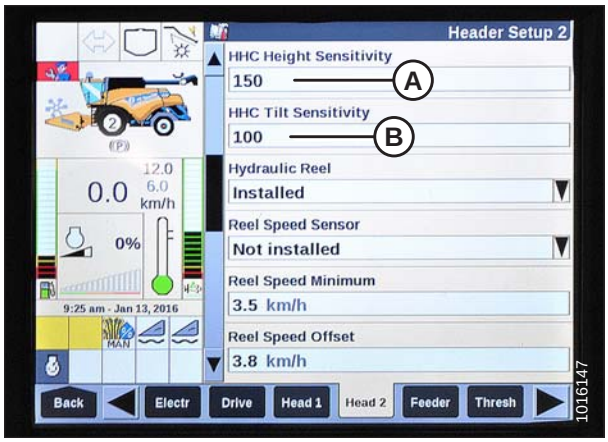

Figure 4.121: New Holland Combine Display

4.11.2 Checking Voltage Range from Combine Cab (New Holland CR Series)

NOTE:

Changes may have been made to the combine controls or display since this document was published. Refer to the combine operator's manual for updates.

CAUTION

Check to be sure all bystanders have cleared the area.

1. Position header 150 mm (6 in.) above ground.
2. Select DIAGNOSTICS (A) on main page. The DIAGNOSTICS page displays.

Figure 4.122: New Holland Combine Display

3. Select SETTINGS (A). The SETTINGS page displays.

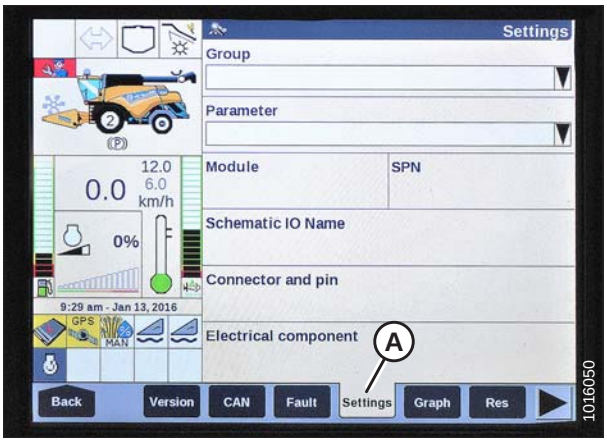

Figure 4.123: New Holland Combine Display

4. Select HEADER HEIGHT/TILT (A) from GROUP drop-down menu.
5. Select HEADER HEIGHT SENS. L (B) from PARAMETER drop-down menu.

Figure 4.124: New Holland Combine Display

6. Select GRAPH (A). The exact voltage (B) is displayed at top of page.
7. Raise and lower header to see full range of voltage readings.
8. If sensor voltage is not within low and high limits shown in *4.4 Height Sensor Output Voltage Range – Combine Requirements, page 103*, or if range between low and high limits is insufficient, you need to make adjustments. For instructions, refer to *4.4.2 Adjusting Header Height Sensor Voltage Range (Left Side), page 106* and *4.4.3 Adjusting Header Height Sensor Voltage Range (Right Side), page 106*.

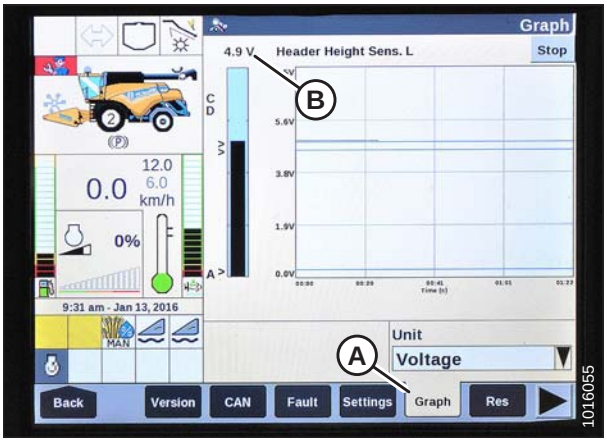

Figure 4.125: New Holland Combine Display

4.11.3 Calibrating Auto Header Height Control (New Holland CR Series)

NOTE:

Changes may have been made to the combine controls or display since this document was published. Refer to the combine operator's manual for updates.

CAUTION

Check to be sure all bystanders have cleared the area.

Check the following conditions before starting the header calibration procedure:

- The header is attached to the combine.
- The combine is on level ground, with the header level to the ground.
- The engine is running.
- The combine is **NOT** moving.
- No faults have been received from Header Height Controller (HHC) module.
- Header/feeder is disengaged.
- Lateral float buttons are **NOT** pressed.
- ESC key is **NOT** pressed.

To calibrate the AHHC, follow these steps:

1. Select CALIBRATIONS (A) on the main page. The CALIBRATION page displays.

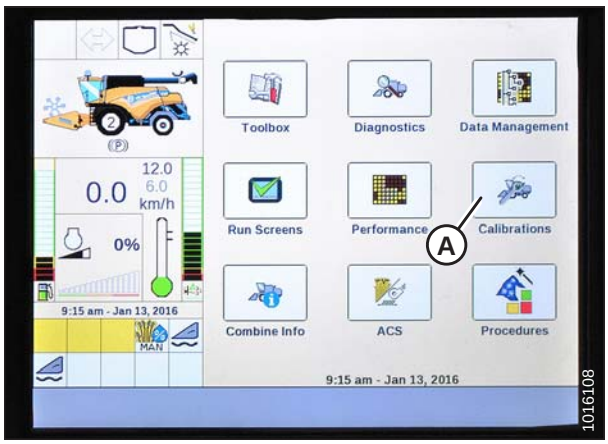

Figure 4.126: New Holland Combine Display

2. Select CALIBRATION drop-down arrow (A).

Figure 4.127: New Holland Combine Display

3. Select HEADER (A) from the list of calibration options.

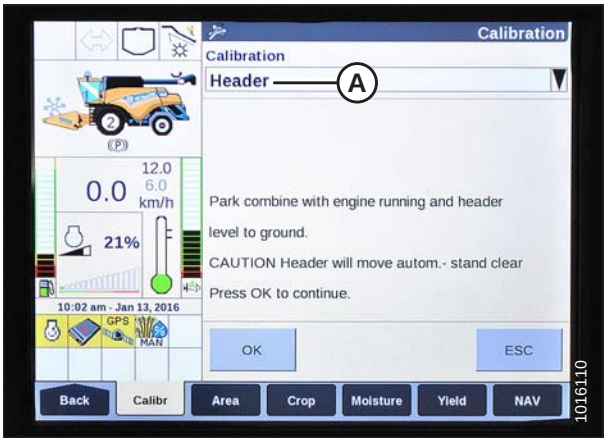

Figure 4.128: New Holland Combine Display

4. Follow calibration steps in the order they appear on screen. As you proceed through the calibration process, the display will automatically update to show the next step.

   NOTE:

   Pressing the ESC key during programming or letting system sit idle for more than 3 minutes will stop the calibration procedure.

   NOTE:

   Refer to your combine operator's manual for an explanation of any encountered error codes.

Figure 4.129: New Holland Combine Display

5. When all steps have been completed, the CALIBRATION COMPLETED message is displayed on screen.

   NOTE:

   If the float was set heavier to complete the ground calibration procedure, return it to the recommended operating float after completing calibration.

Figure 4.130: New Holland Combine Display

4.11.4 Setting Auto Height (New Holland CR Series)

This procedure applies only to 2015 and later CR models (6.80, 6.90, 7.90, 8.90, 9.90, and 10.90).

The console has two buttons used for auto height presets. The toggle switch that was present on previous models is now configured as shown at right. MacDon headers only require first two buttons (A) and (B). The third button (C) is not configured.

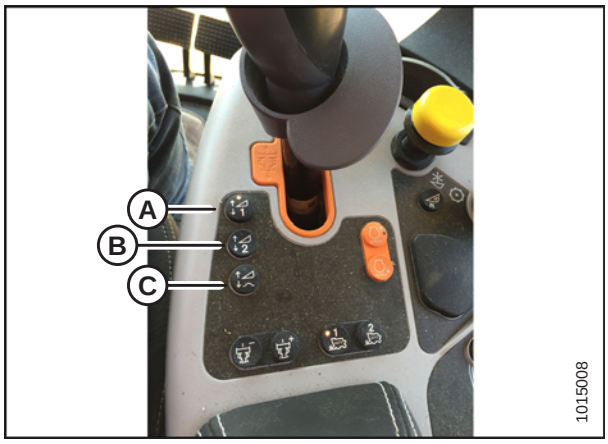

Figure 4.131: New Holland Combine Controls

To set auto height, follow these steps:

1. Engage separator and header.
2. Select RUN SCREENS (A) on main page.

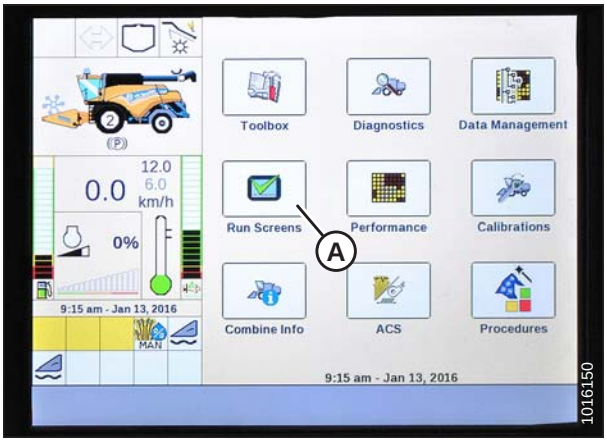

Figure 4.132: New Holland Combine Display

3. Select RUN tab that shows MANUAL HEIGHT.

   NOTE:

   The MANUAL HEIGHT field may appear on any of RUN tabs. When an auto height set point button is pressed, display will change to AUTO HEIGHT (A).

4. Lower header to ground.
5. Select one of auto height set point buttons shown in Figure *4.131, page 156*.
   - Press SET 1 button for lower position
   - Press SET 2 button for higher position

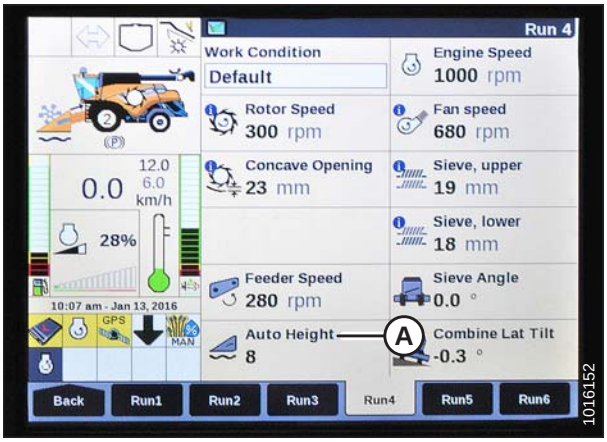

Figure 4.133: New Holland Combine Display

4.11.5 Setting Maximum Work Height (New Holland CR Series)

This procedure applies only to 2015 and later CR models (6.80, 6.90, 7.90, 8.90, 9.90, and 10.90).

1. Select TOOLBOX (A) on main page. The TOOLBOX page displays.

Figure 4.134: New Holland Combine Display

2. Select FEEDER (A). The FEEDER SETUP page displays.
3. Select MAXIMUM WORK HEIGHT field (B).

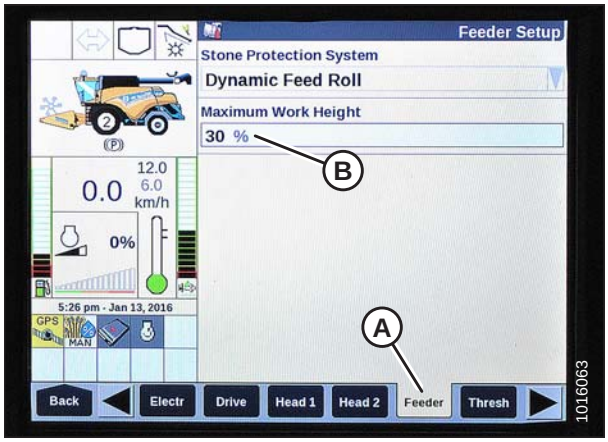

Figure 4.135: New Holland Combine Display

4. Set MAXIMUM WORK HEIGHT to desired value.
5. Press SET and then press ENTER.

Figure 4.136: New Holland Combine Display

Chapter 5: Maintenance and Servicing

The following instructions provide information about routine maintenance and servicing of the PW8 Pick-Up Header. For detailed maintenance and service information, contact your Dealer. A parts catalog is located in the manual case at the left end of the header.

Log hours of operation and use the Maintenance Schedule/Record provided to keep a record of scheduled maintenance. Refer to *5.2.1 Maintenance Schedule/Record, page 160*.

5.1 Preparing Header for Servicing

CAUTION

To avoid personal injury, before servicing header or opening drive covers, perform the following procedures:

- **Lower the header fully. If necessary to service in the raised position, always engage header lift cylinder safety props on combine.**
- **Stop engine and remove key.**
- **Engage park brake.**
- **Wait for all moving parts to stop.**

5.2 Maintenance Requirements

Periodic maintenance requirements are organized according to service intervals.

Regular maintenance is the best insurance against early wear and untimely breakdowns. Following the maintenance schedule will increase your machine's life.

When servicing the machine, refer to the specific headings in this section and use only fluids and lubricants specified in the inside back cover of this book.

If a service interval specifies more than one time frame, e.g., 100 hours or annually, service the machine at whichever interval is reached first.

IMPORTANT:

Recommended intervals are for average conditions. Service the machine more often if operated under adverse conditions (severe dust, extra heavy loads, etc.).

CAUTION

Carefully follow all safety messages, refer to *1 Safety, page 1*.

5.2.1 Maintenance Schedule/Record

Table 5.1 Maintenance Schedule/Record

	ACTION:	✓ - Check															
		♦ - Lubricate															
		▲ - Change															
✎	Hour meter reading																
✎	Service date																
✎	Serviced by																
10 Hours																	
♦	Lubricate auger drive chain – refer to *5.3.3 Lubricating Auger Drive Chain, page 164*.																
✓	Check auger drive chain tension – refer to *Adjusting Auger Drive Chain Tension, page 188*.																
✓	Check hydraulic hoses for leaks – refer to *5.9.5 Hydraulic Hoses and Lines, page 247*.																
✓	Check draper belt tension – refer to *3.12.7 Draper Belt Tension, page 85*.																
50 Hours																	
✓	Check auger drive chain tension – refer to *Adjusting Auger Drive Chain Tension, page 188*.																
✓	Check hydraulic hoses for leaks – refer to *5.9.5 Hydraulic Hoses and Lines, page 247*.																
✓	Check draper belt tension – refer to *3.12.7 Draper Belt Tension, page 85*.																
✓	Check draper belt condition – refer to *5.7.1 Draper Belts, page 204*.																
✓	Check draper plastic guides for wear – refer to *5.7.1 Draper Belts, page 204*.																

Table 5.1 Maintenance Schedule/Record (continued)

ACTION:	✓ - Check																
	♦ - Lubricate																
	▲ - Change																
100 Hours																	
♦	Clean and grease driveshaft splines – refer to *Cleaning Driveline Splined Shaft, page 174*.																
♦	Lubricate driveline slip-joint and clutch – refer to *5.3 Lubrication, page 162*.																
♦	Lubricate auger drive chain and bearing – refer to *5.3 Lubrication, page 162*.																
✓	Check tire pressure – refer to *5.11.3 Inflating Tire, page 258*.																
✓	Check wheel bolt torque – refer to *5.11.2 Installing Wheel, page 257*.																
✓	Check loose fasteners – refer to *8.1 Torque Specifications, page 273*.																
✓	Check bearings and seals – refer to *5.7.3 Draper Deck Roller Bearings, page 212*.																
✓	Check pick-up fingers for wear – refer to *5.7.2 Draper Fingers and Guides, page 209*.																
✓	Check height control sensor pivot points – refer to *4.3 Header Height Sensors, page 97*.																
End of Season																	
	Clean and touch-up worn paint spots																
	Clean header																
✓	Check header for wear																

5.2.2 Preseason/Annual Service

⚠ CAUTION

- **Review the operator's manual to refresh your memory on safety and operating recommendations.**
- **Review all safety signs and other decals on the header and note hazard areas.**
- **Ensure all shields and guards are properly installed and secured. Never alter or remove safety equipment.**
- **Make certain you understand and have practiced safe use of all controls. Know the capacity and operating characteristics of the machine.**

Perform the following at the beginning of each operating season:

1. Lubricate machine completely. Refer to *5.3 Lubrication, page 162*.
2. Perform all annual maintenance. Refer to *5.2.1 Maintenance Schedule/Record, page 160*.

5.2.3 End-of-Season Service

Refer to *3.15 Storing the Header, page 93* for end of season servicing information.

5.3 Lubrication

CAUTION

To avoid personal injury, before servicing header or opening drive covers, perform the following procedures:

- **Lower the header fully. If necessary to service in the raised position, always engage header lift cylinder safety props on combine.**
- **Stop engine and remove key.**
- **Engage park brake.**
- **Wait for all moving parts to stop.**

Lubricate the machine after every 100 hours of operation.

Log hours of operation and use the maintenance schedule provided to keep a record of scheduled maintenance. Refer to *5.2.1 Maintenance Schedule/Record, page 160*.

5.3.1 Greasing Procedure

WARNING

To avoid bodily injury or death from unexpected startup of machine, always stop engine and remove key before making adjustments to machine.

1. Use the recommended lubricants specified in the inside back cover of this manual.
2. Wipe grease fitting with a clean cloth before greasing to avoid injecting dirt and grit.
3. Inject grease through fitting with grease gun until grease overflows fitting, except where noted.
4. Leave excess grease on fitting to keep out dirt.
5. Replace any loose or broken fittings immediately.
6. If fitting will not take grease, remove and clean thoroughly. Also clean lubricant passageway. Replace fitting if necessary.

5.3.2 Greasing Points

Every 100 Hours

Figure 5.1: Greasing Points

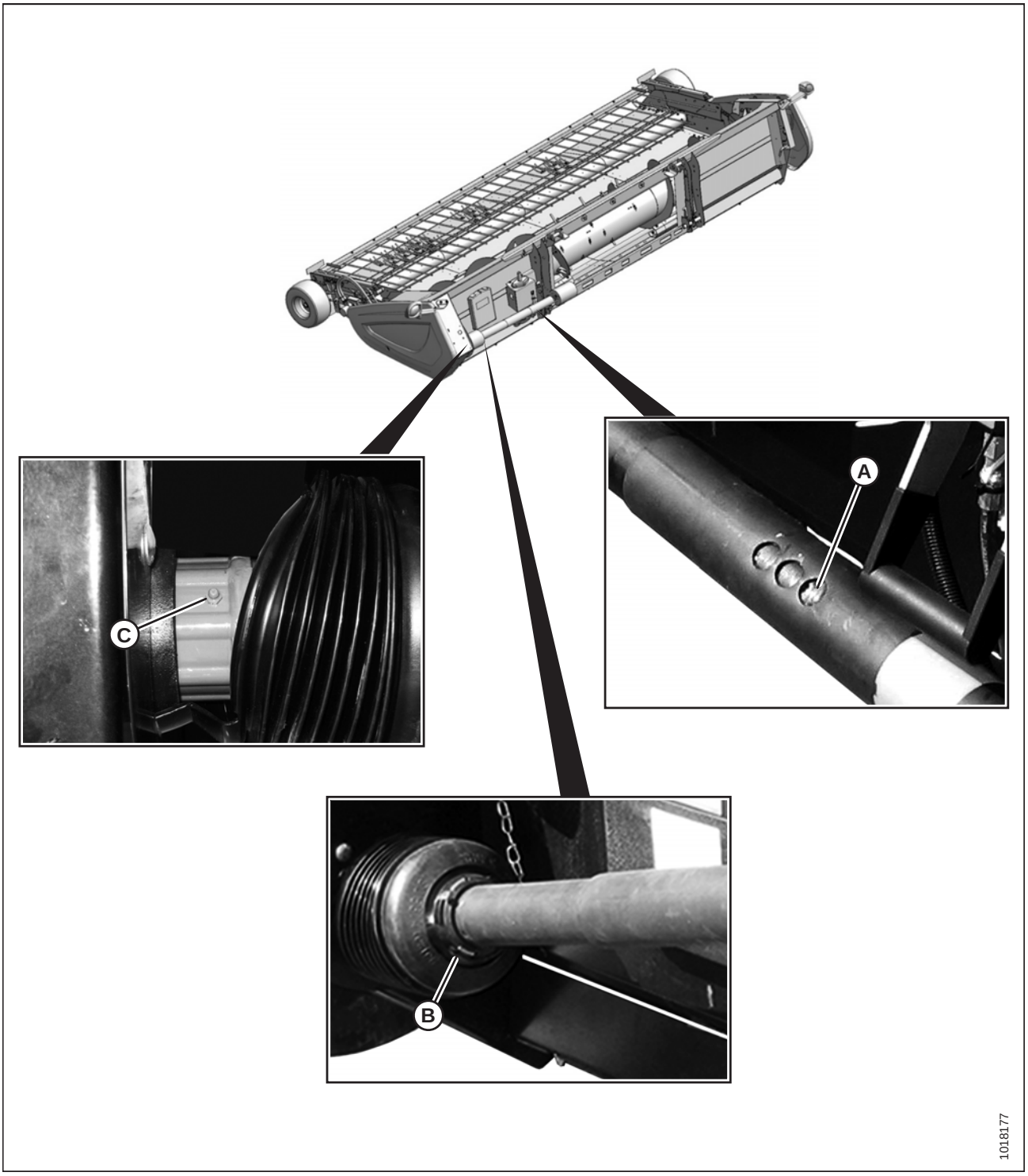

A - Driveline Slip-Joint **B - Driveline Guard (Both Ends)** **C - Driveline Clutch**

5.3.3 Lubricating Auger Drive Chain

DANGER

To avoid bodily injury or death from unexpected startup of machine, always stop engine and remove key from ignition before leaving operator's seat for any reason.

1. Lower header to the ground, shut down the combine, and remove the key from the ignition.
2. Open left endshield (A). For instructions, refer to *3.3.1 Opening Left Endshield, page 29*.

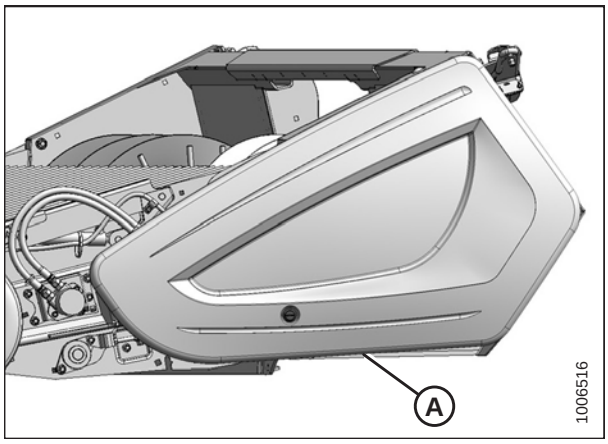

Figure 5.2: Left Endshield

3. Apply a liberal amount of SAE 30 engine oil to the chain (A) every 10 hours.
4. Close left endshield. For instructions, refer to *3.3.2 Closing Left Endshield, page 30*.

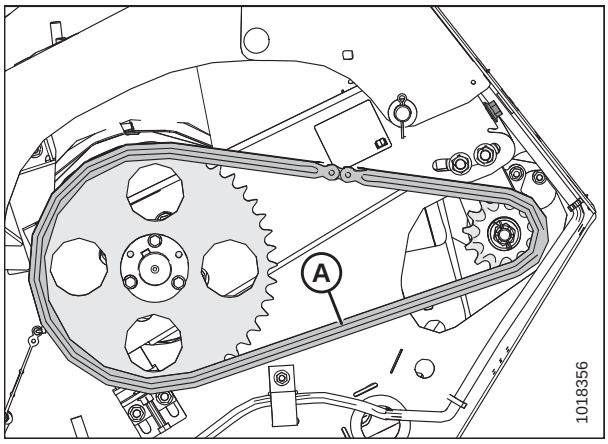

Figure 5.3: Auger Drive Chain

5.4 Installing Sealed Bearing

1. Clean shaft and apply rust preventive coating.
2. Install flangette (A), bearing (B), second flangette (C), and lock collar (D).

   NOTE:

   The locking cam is on only one side of the bearing.

3. Install and tighten the flangette bolts (E).
4. Lock the lock collar (D) with a punch once the shaft is correctly positioned.

   NOTE:

   Lock the collar in the same direction the shaft rotates, and tighten the setscrew in the collar.

5. Loosen the flangette bolts (E) on the mating bearing one turn, and retighten. This will enable the bearing to properly line up.

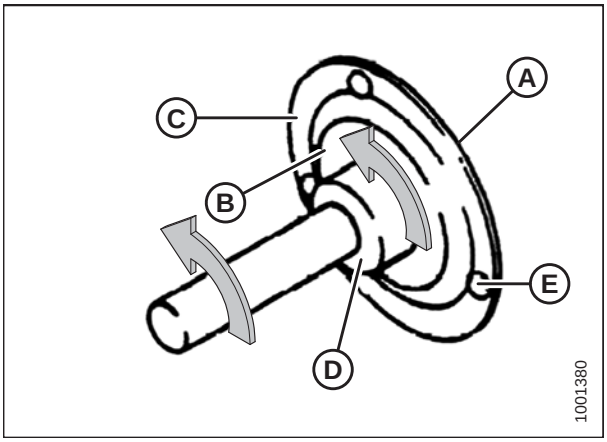

Figure 5.4: Sealed Bearing

5.5 Drives

This section covers maintenance procedures for the header, draper, and auger drives.

5.5.1 Header Driveshaft

Clean and grease header driveshaft splines (A) annually to prevent excessive corrosion and wear.

NOTE:

Remove header end of driveline to access splines. Refer to *Removing Header Driveline, page 167*.

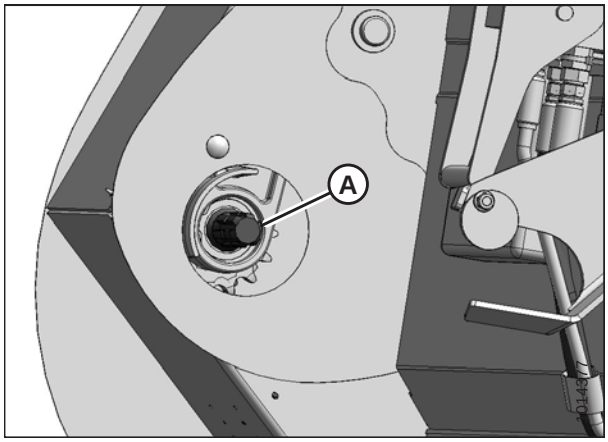

Figure 5.5: Header Driveshaft Splines

5.5.2 Header Driveline

Removing Header Driveline

DANGER

To avoid bodily injury or death from unexpected startup of machine, always stop engine and remove key from ignition before leaving operator's seat for any reason.

1. Lower header to ground, shut down combine, and remove key from ignition.
2. Disconnect tethers (A) securing driveline guard to header.
3. Pull back guard (B) to expose collar (C) at the combine end of the driveline.

CAUTION

To prevent injury, or damage to the driveline, hold the driveline so that it doesn't fall to the ground.

4. Pull back collar (C) and pull driveline (D) off feeder house shaft while supporting end of driveline.

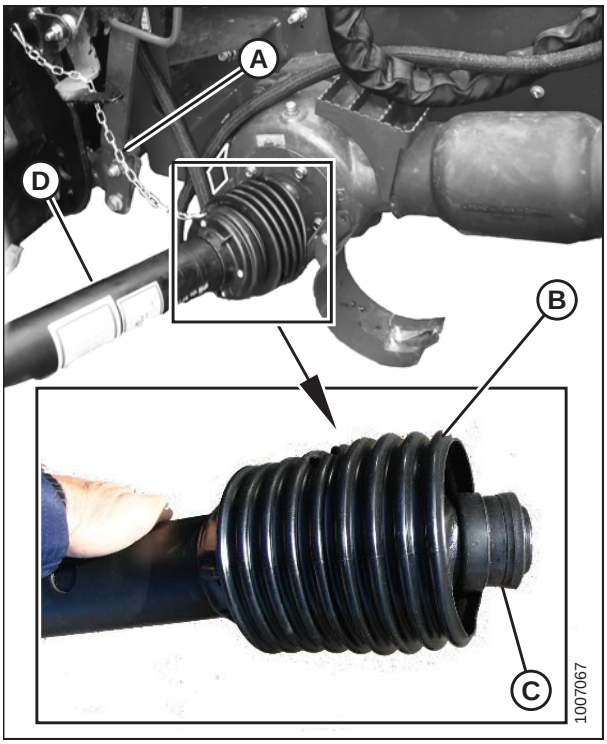

Figure 5.6: Combine End of Driveline

5. Pull back guard (A) to expose collar (B) at the header end of driveline. If necessary, loosen bolt (C) and move plate (D) to release guard.
6. Pull back collar (B), and pull driveline off header driveshaft.

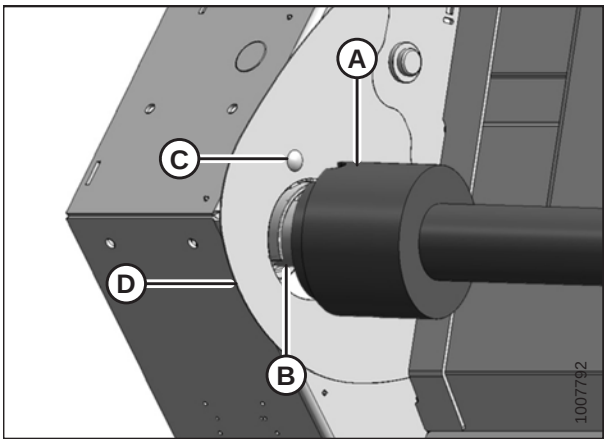

Figure 5.7: Header End of Driveline

Installing Header Driveline

DANGER

To avoid bodily injury or death from unexpected startup of machine, always stop engine and remove key from ignition before leaving operator's seat for any reason.

CAUTION

To prevent injury, or damage to the driveline, hold the driveline so that it doesn't fall to the floor.

1. Lower header to ground, shut down combine, and remove key from ignition.
2. Pull back guard (A) to expose collar (B) at the header (notched) end of the driveline.

   NOTE:

   The driveline may separate if not supported at both ends.
3. Pull back collar (B), and slide coupler onto splined input shaft (C) until it locks. Release collar (B).
4. Loosen bolt (D) and move plate (E) (if necessary) to provide sufficient clearance for driveline guard.

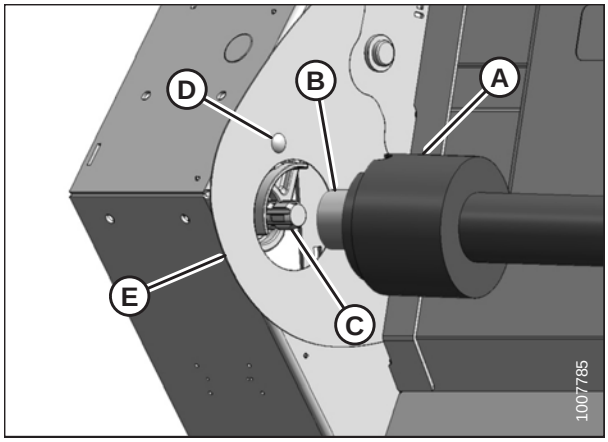

Figure 5.8: Header End of Driveline

5. Line up notch (A) in the driveline's rubber bellows with bolt (B) so the notch fits around casting (C) inside the auger drive compartment.

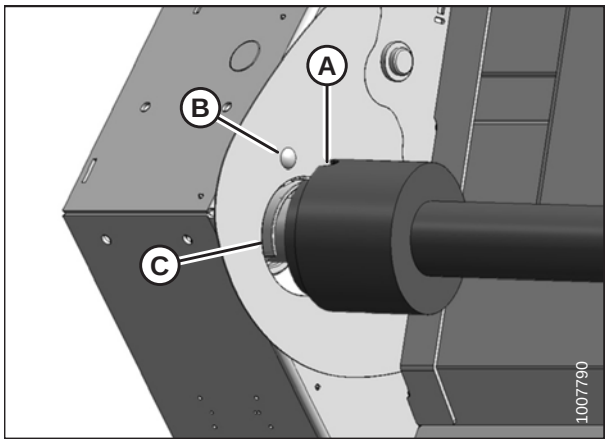

Figure 5.9: Header End of Driveline

6. Sandwich the lip (A) on the driveline bellows between the hole in the endsheet and the casting (B).
7. Tighten bolt (C).

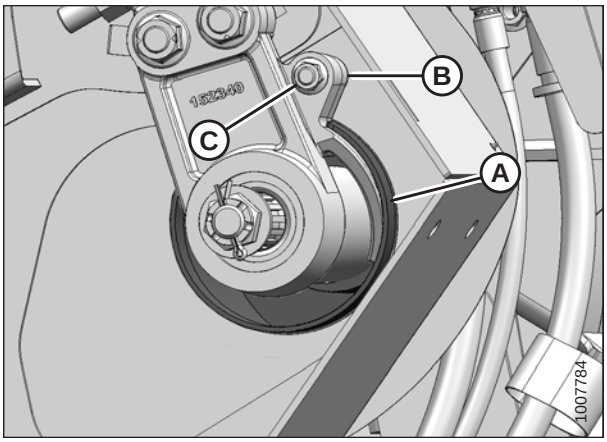

Figure 5.10: Driveline Shield

8. Pull back guard (B) to expose collar (C) at the combine end of the driveline (D).
9. Pull back collar (C), and push driveline (D) onto feeder house shaft until collar locks.
10. Attach tethers (A) to secure driveline guard to header.

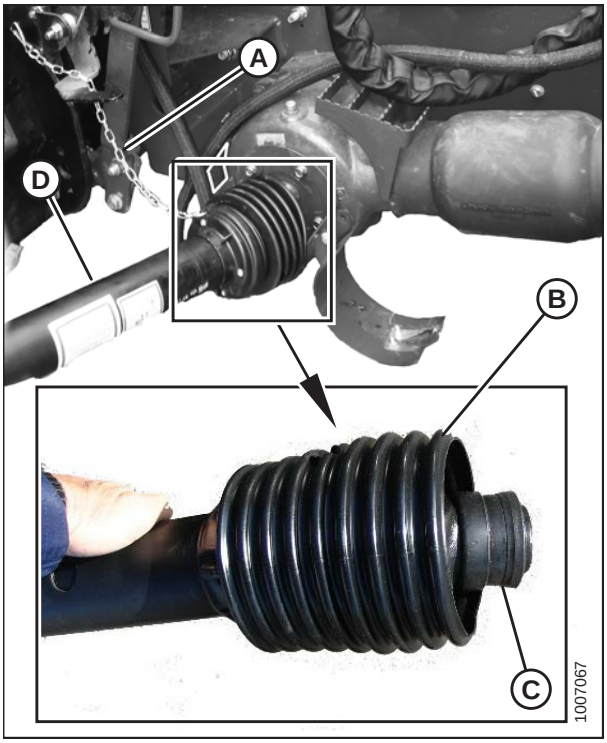

Figure 5.11: Driveline

Replacing Driveline Clutch

Repair or replace the driveline clutch if it can no longer generate the necessary torque to operate the header. Refer to your PW8 Pick-Up Header Parts Catalog for replacement part numbers.

1. Remove the driveline from the header. Refer to *Removing Header Driveline, page 167*.
2. Remove the driveline guard. Refer to *Removing Driveline Guard, page 170*.

3. Remove cross and bearings (A) connecting clutch (B) to driveline yoke (C).
4. Install new cross and bearings (A) and new clutch (B) onto existing driveline yoke (C).
5. Reinstall driveline guard. Refer to *Installing Driveline Guard, page 172*.
6. Reinstall driveline. Refer to *Installing Header Driveline, page 168*.

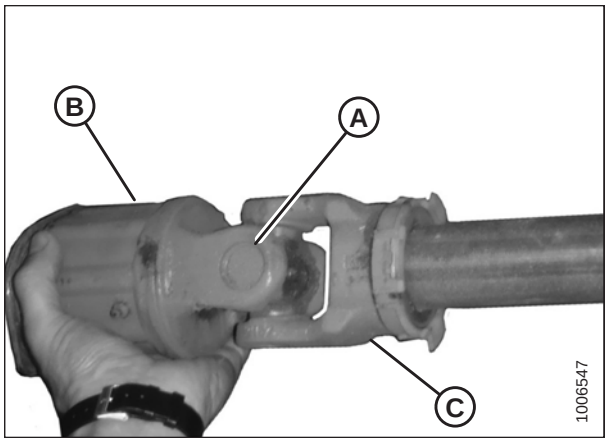

Figure 5.12: Driveline Clutch

Removing Driveline Guard

The driveline guard must remain attached to the driveline, but can be removed for maintenance purposes only.

DANGER

To avoid bodily injury or death from unexpected startup of machine, always stop engine and remove key from ignition before leaving operator's seat for any reason.

NOTE:

The driveline does **NOT** need to be removed from the header in order to remove the driveline guard.

1. Stop the engine, and remove the key from the ignition.
2. Disconnect tethers (not shown) at ends of driveline.
3. If the driveline is in the storage position, rotate disc (B) on the driveline storage hook (A), and remove the driveline from the hook.

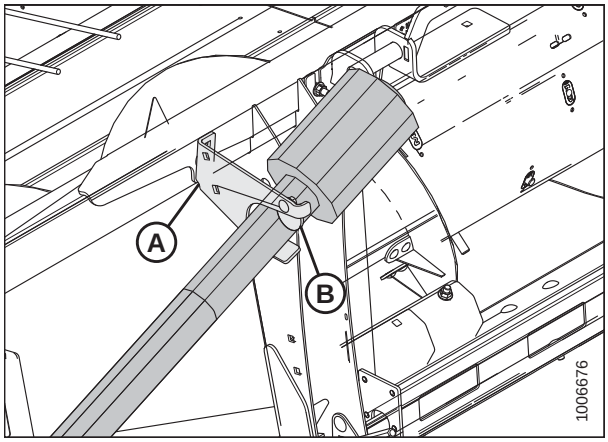

Figure 5.13: Combine End of Driveline in Storage Position

4. If the driveline is attached to the combine, remove the driveline from the combine by pulling the quick disconnect collar (A) to release the driveline yoke from the combine shaft. Refer to *Removing Header Driveline, page 167*.

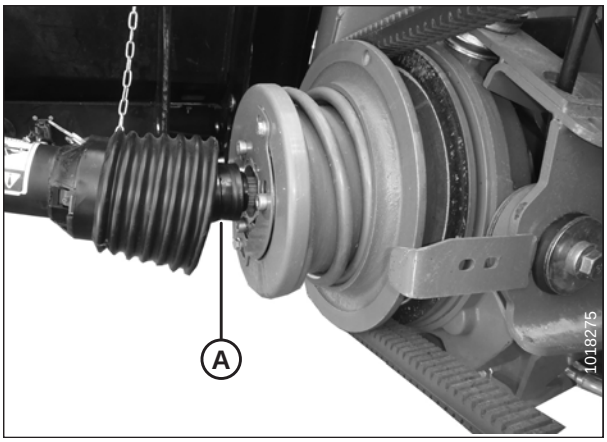

Figure 5.14: Combine End of Driveline Attached to Combine

5. Lift the combine end of the driveline (A) from the hook, and extend the driveline until it separates. Hold the header end of the driveline (B) to prevent it from dropping and hitting the ground.

Figure 5.15: Separated Driveline

6. Use a slotted screwdriver to release grease fitting/lock (A).

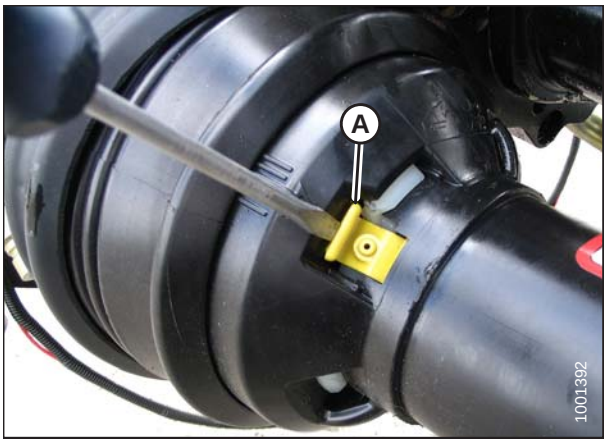

Figure 5.16: Driveline Guard

7. Rotate driveline guard locking ring (A) counterclockwise using a slotted screwdriver until lugs (B) line up with the slots in the guard.
8. Pull driveline guard off driveline.

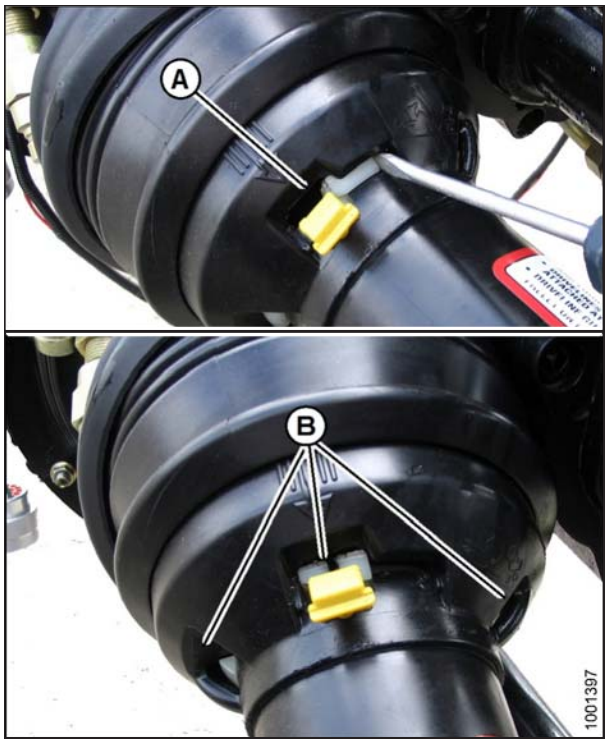

Figure 5.17: Driveline Guard

Installing Driveline Guard

1. Slide driveline guard onto driveline, and line up slotted lug on locking ring (A) with arrow (B) on guard.

Figure 5.18: Driveline Guard

2. Push driveline guard onto ring until locking ring is visible in slots (A).

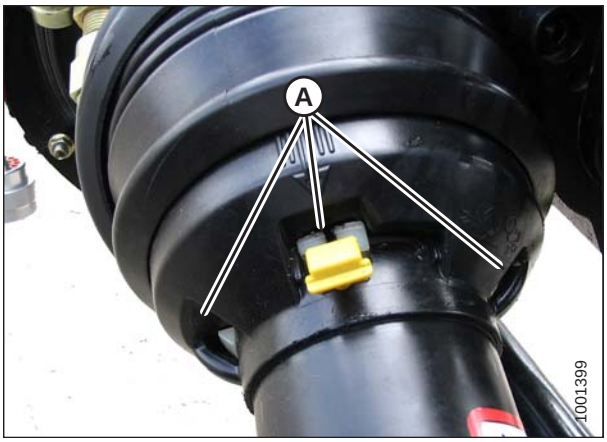

Figure 5.19: Driveline Guard

3. Use a slotted screwdriver to rotate ring (A) clockwise and lock ring in guard.

Figure 5.20: Driveline Guard

4. Push grease fitting (A) back into guard.

Figure 5.21: Driveline Guard

5. Reassemble driveline.

   NOTE:

   The splines are keyed to ensure proper alignment of the universals. Align weld (A) with missing spline (B) when reassembling.

   NOTE:

   If spline weld is missing, driveshaft should be replaced. Excessive vibration may occur if U-joints are not in phase.

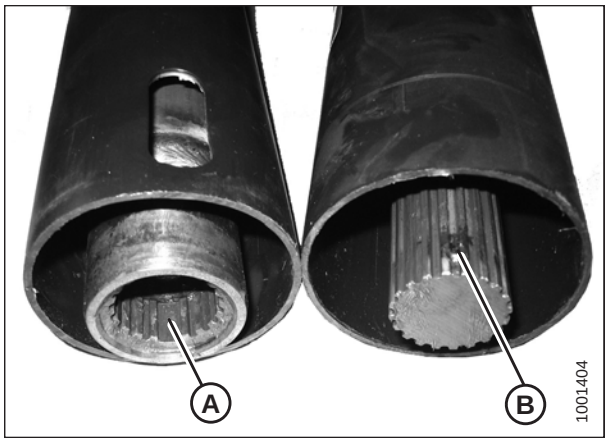

Figure 5.22: Driveline Splines

6. Slide driveline into hook (A) on header and rotate disc (B) to secure driveline, or connect the driveline to the combine.
7. Attach tethers (not shown) to header.

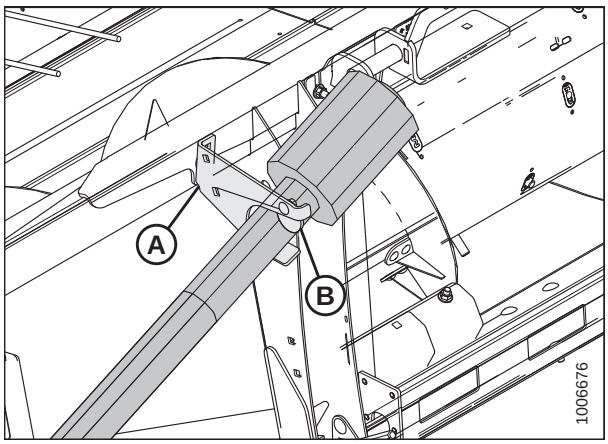

Figure 5.23: Combine End of Driveline in Storage Position

Cleaning Driveline Splined Shaft

1. Remove the driveline guard. Refer to *Removing Driveline Guard, page 170*.
2. Clean internal and external splines.
3. Install driveline guard. Refer to *Installing Driveline Guard, page 172*.

5.5.3 Draper Drives

The two hydraulic drive motors do not require any maintenance. If repairs are required (other than replacing motor seal kits), motors should be removed and serviced at your dealership.

Removing Front Hydraulic Motor

DANGER

To avoid bodily injury or death from unexpected startup of machine, always stop engine and remove key from ignition before leaving operator's seat for any reason.

1. Lower header to the ground, shut down the combine, and remove the key from the ignition.
2. Disconnect hydraulic hoses (A) from front motor on left side of header. Install caps onto hose ends, or wrap with plastic and move hoses away from work area.

   IMPORTANT:

   Keep hydraulic coupler tips and connectors clean. Allowing dirt, dust, water, or foreign material to enter the system is the major cause of hydraulic system damage. Do **NOT** attempt to service hydraulic systems in the field. Precision fits require a perfectly clean connection during overhaul.
3. Use a 13 mm socket wrench to remove two M8 hex flange nuts (B).

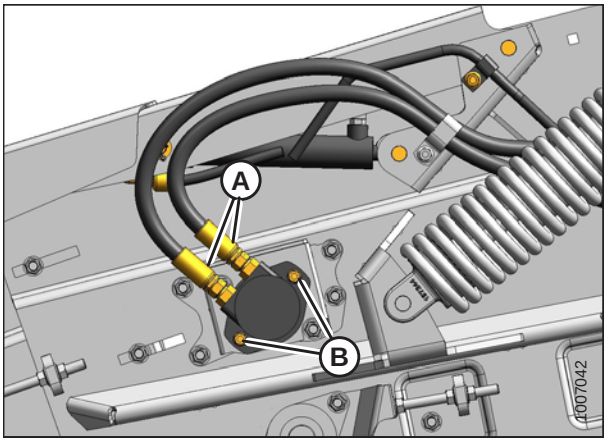

Figure 5.24: Front Hydraulic Motor – Left Side

4. Pull hydraulic motor (A) from roller shaft.

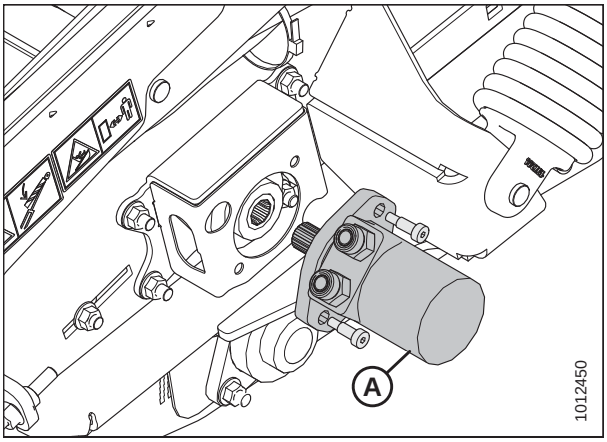

Figure 5.25: Front Hydraulic Motor – Left Side

Installing Front Hydraulic Motor

1. Apply grease to splines of front hydraulic motor (A) shaft.
2. Install hydraulic motor (A) onto roller shaft (B) and install shoulder bolts (C).

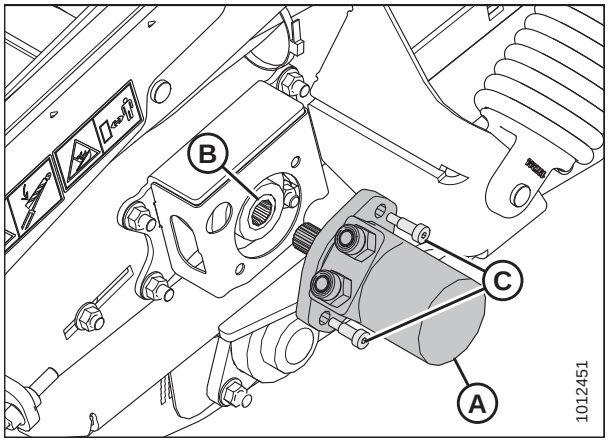

Figure 5.26: Front Hydraulic Motor – Left Side

3. Secure hydraulic motor with two M8 hex flange nuts (A) and torque to 50 Nm (37 lbf·ft) using a 13 mm socket wrench.

   IMPORTANT:

   Hydraulic motor must be able to move slightly during operation. Tighten to required torque only, and do **NOT** use washers or shims. It is normal for the motor to feel somewhat loose after torquing.

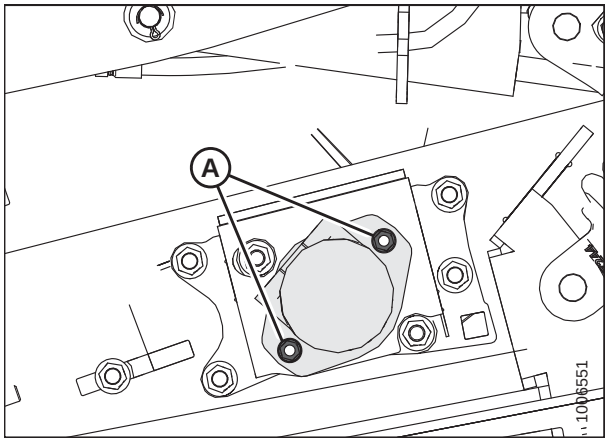

Figure 5.27: Front Hydraulic Motor – Left Side

4. If installing a new motor, reuse hydraulic fittings (A) from original motor.

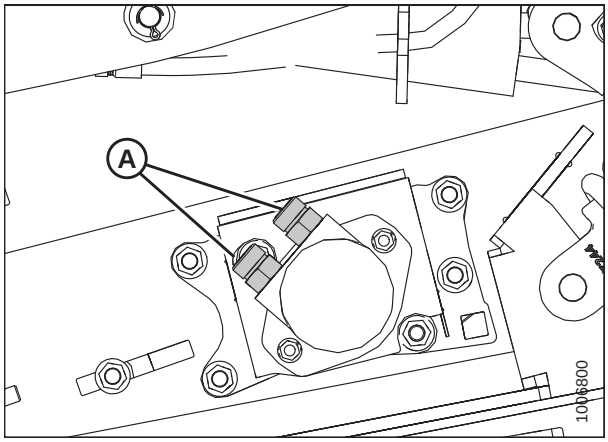

Figure 5.28: Hydraulic Fittings

5. Reconnect hydraulic hoses (A) to motor.

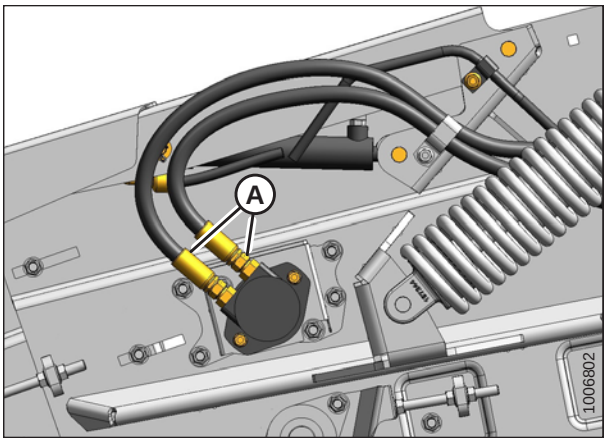

Figure 5.29: Hydraulic Hoses

Removing Rear Hydraulic Motor

DANGER

To avoid bodily injury or death from unexpected startup of machine, always stop engine and remove key from ignition before leaving operator's seat for any reason.

1. Lower header to the ground, shut down the combine, and remove the key from the ignition.
2. Open left endshield (A). Refer to *3.3.1 Opening Left Endshield, page 29*.

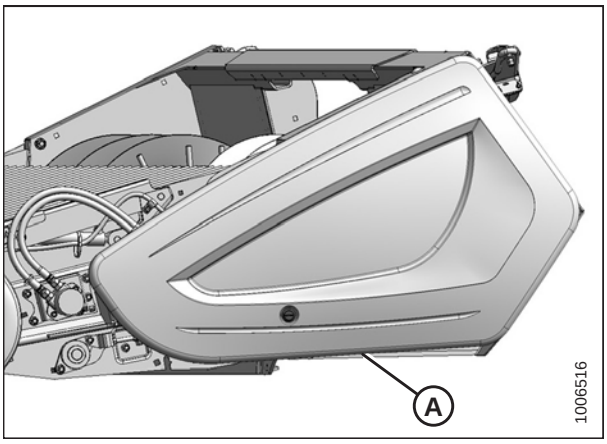

Figure 5.30: Left Endshield

3. Disconnect hydraulic hoses (A) from motor. Install plugs onto hose ends, or wrap with plastic and move hoses away from work area. Loosen or remove adjacent cinch straps if necessary.

   IMPORTANT:

   Keep hydraulic coupler tips and connectors clean. Allowing dirt, dust, water, or foreign material to enter the system is the major cause of hydraulic system damage. Do **NOT** attempt to service hydraulic systems in the field. Precision fits require a perfectly clean connection during overhaul.

4. Remove two 10 mm shoulder bolts (B) using an 8 mm hex key.
5. Pull hydraulic motor (C) from roller shaft.

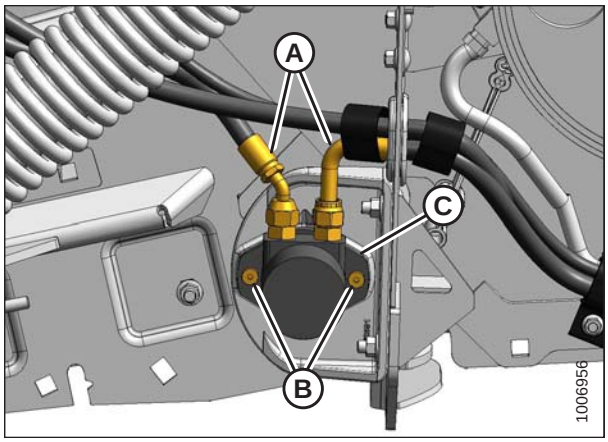

Figure 5.31: Rear Hydraulic Motor – Left Side

Installing Rear Hydraulic Motor

1. Apply grease (extreme pressure [EP] performance with 1.5–5% molybdenum disulphide, NLGI grade 2) to splines of hydraulic motor shaft (A).
2. Install hydraulic motor (B) onto roller shaft, and secure with two 10 mm shoulder bolts (C).
3. Torque bolts to 50 Nm (37 lbf·ft) using an 8 mm hex key.

   IMPORTANT:

   Hydraulic motor must be able to move slightly during operation. Tighten to required torque only, and do **NOT** use washers or shims. It is normal for the motor and the hardware to feel somewhat loose after torquing.

4. Install hydraulic fittings (D) from original motor (if installing new motor).
5. Reconnect hydraulic hoses (A) to motor.
6. Install previously removed cinch straps.
7. Close endshield. Refer to *3.3.2 Closing Left Endshield, page 30*.

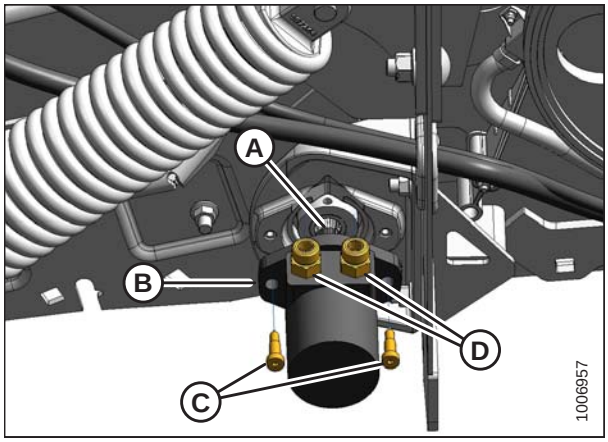

Figure 5.32: Rear Hydraulic Motor – Left Side

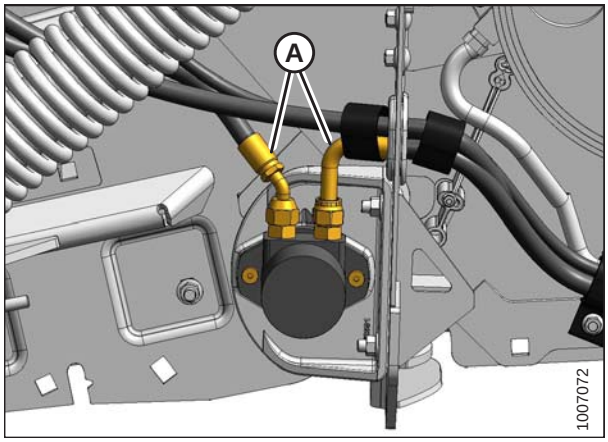

Figure 5.33: Rear Hydraulic Motor – Left Side

Removing Hydraulic Motor Hoses

DANGER

To avoid bodily injury or death from unexpected startup of machine, always stop engine and remove key from ignition before leaving operator's seat for any reason.

1. Lower the header to the ground, and lower the hold-down completely.
2. Shut down the combine and remove the key from the ignition.
3. Open left endshield (A). Refer to *3.3.1 Opening Left Endshield, page 29* for instructions.

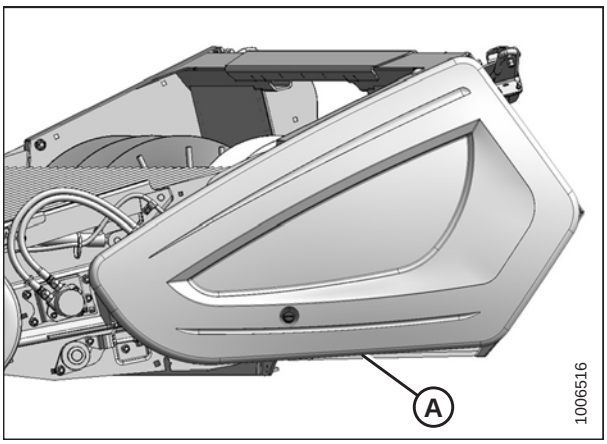

Figure 5.34: Left Endshield

4. Remove hose clips (A) and cinch straps (B).

   NOTE:

   Parts removed to clearly show hydraulic hoses.

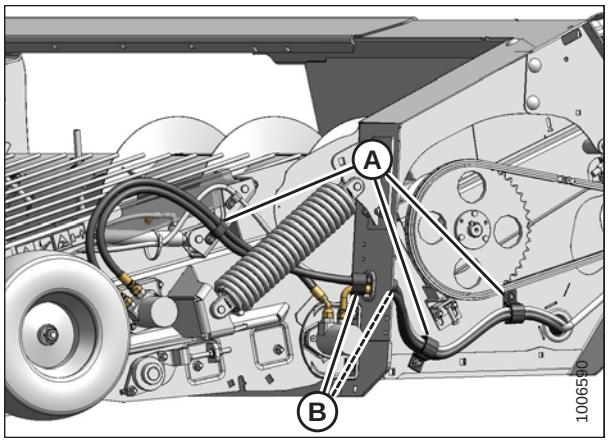

Figure 5.35: Left Side of Header — Model Year 2019 and Prior

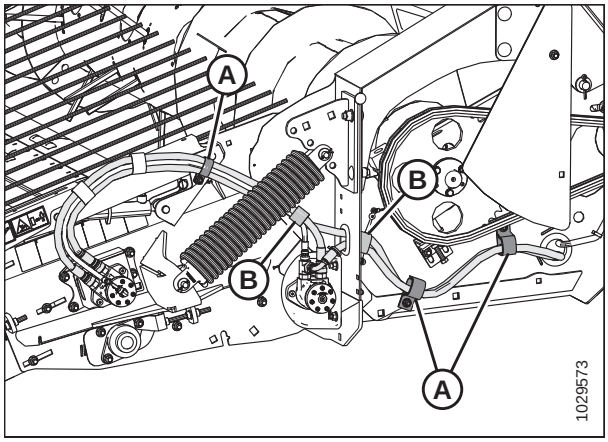

Figure 5.36: Left Side of Header — Model Year 2020 and Later

5. Disconnect and remove hydraulic hoses (A), (B), and (C) from drive motors (D) and (E). Install caps onto hose ends or wrap with plastic to prevent contamination from dirt and debris.

   IMPORTANT:

   Keep hydraulic coupler tips and connectors clean. Allowing dirt, dust, water, or foreign material to enter the system is the major cause of hydraulic system damage. Do **NOT** attempt to service hydraulic systems in the field. Precision fits require a perfectly clean connection during overhaul.

   NOTE:

   Parts removed to clearly show hydraulic hoses.

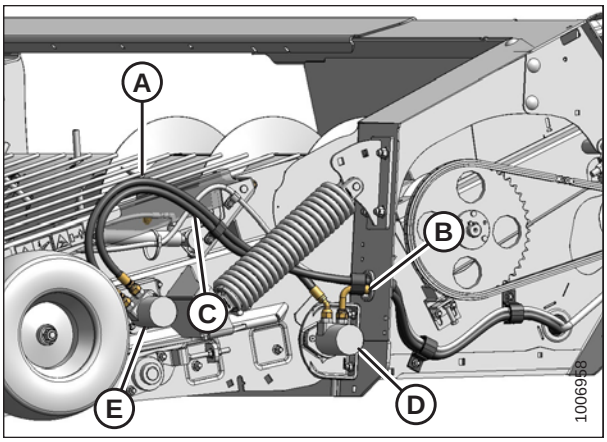

Figure 5.37: Left Side of Header — Model Year 2019 and Prior

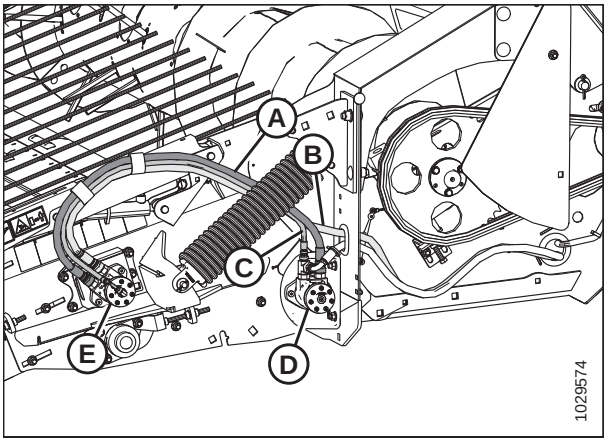

Figure 5.38: Left Side of Header — Model Year 2020 and Later

PW8 headers model year 2020 and later only:

6. Remove cinch straps (A) from the disconnected and capped hoses.

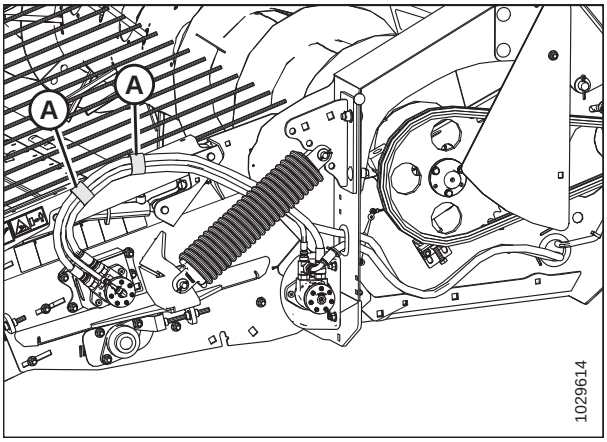

Figure 5.39: Left Side of Header — Model Year 2020 and Later

7. Remove cinch strap (A).
8. Disconnect hose (B) and hose (C) from multicoupler (D).

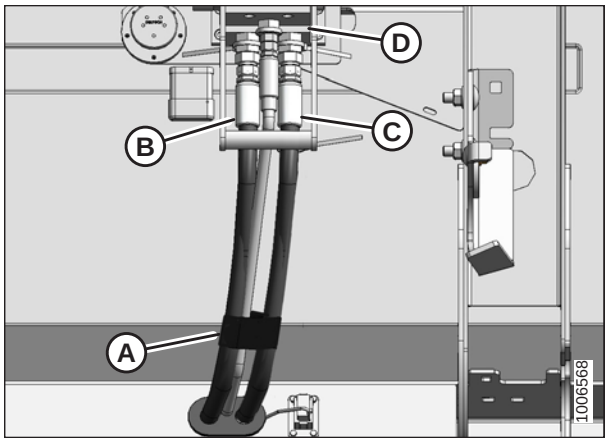

Figure 5.40: Multicoupler on Rear of Header

9. Loosen three M12 hex flange nuts (A), and remove bottom beam cover (B).
10. Pull the hoses out of bottom beam cover (B).

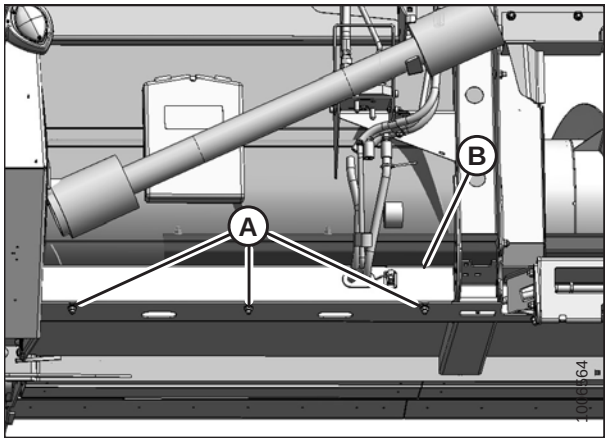

Figure 5.41: Bottom Beam Cover

11. Pull hose (A) through hole (B) in the endsheet and through hole (C) in the frame.

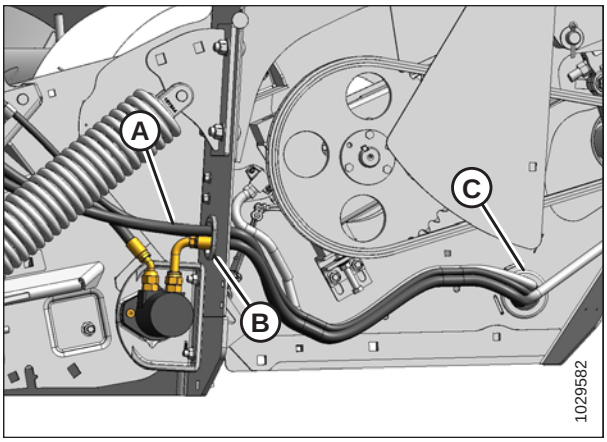

Figure 5.42: Left Side of Header — Model Year 2019 and Prior

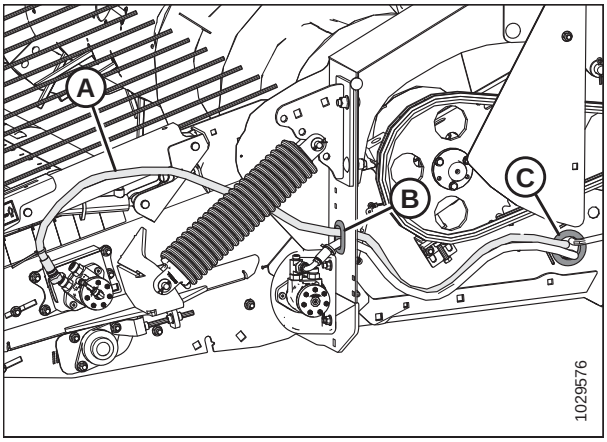

Figure 5.43: Left Side of Header — Model Year 2020 and Later

Installing Hydraulic Motor Hoses

1. Route the two longer hoses (A) and (B) through hole (C) in the endsheet and hole (D) in the header frame.

   NOTE:

   The angled fitting on hose (B) attaches to pick-up rear drive motor (E). Hose (A) (marked with yellow cable ties) has identical fittings at both ends and attaches to the forward drive motor fitting that has a matching yellow cable tie.

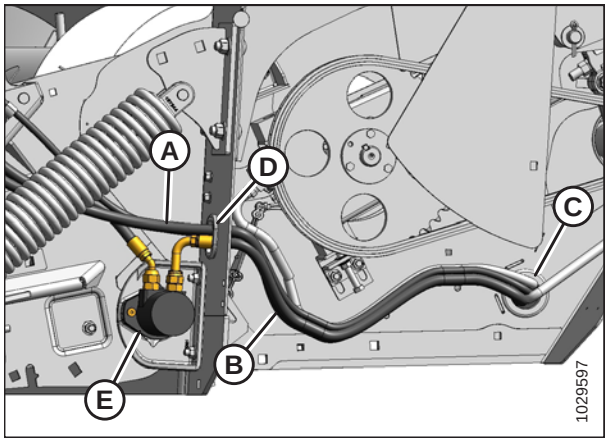

Figure 5.44: Left Side of Header — Model Year 2019 and Prior

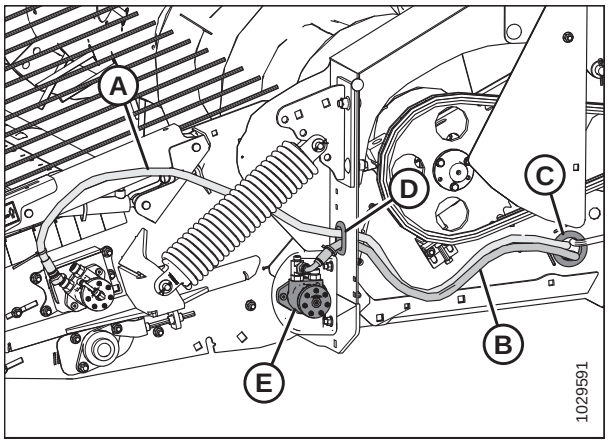

Figure 5.45: Left Side of Header — Model Year 2020 and Later

2. Route hose (A) and hose (B) through grommet (C) in the bottom beam cover. Match the colored cable ties and attach hose (A) and hose (B) to the multicoupler. If the colored cable ties are missing, attach as follows:

   a. Attach longer hose (A) to forward port on the forward drive motor and to connector (E) on the multicoupler.

   b. Attach shorter hose (B) to the aft port on the rear drive motor and to connector (F) on the multicoupler.

   c. Secure the hoses with cinch strap (D).

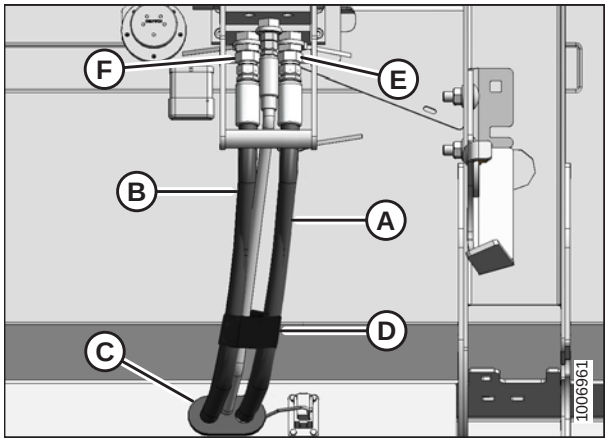

Figure 5.46: Multicoupler on Rear of Header

3. Connect hose (A) to front hydraulic motor (B). Connect shorter hose (C) to front hydraulic motor (B) and rear hydraulic motor (D).

   NOTE:

   The end of hose (C) with an angled fitting attaches to rear motor (B).

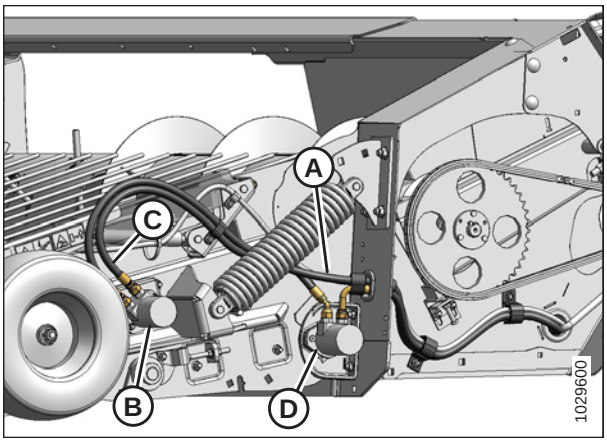

Figure 5.47: Left Side of Header — Model Year 2019 and Prior

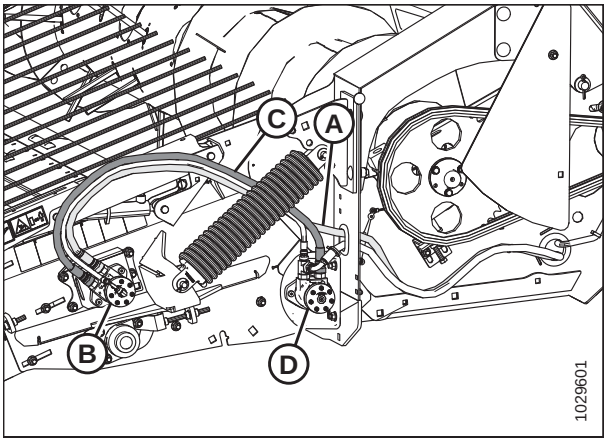

Figure 5.48: Left Side of Header — Model Year 2020 and Later

PW8 headers model year 2020 and later only:

4. Connect hose (A) to front hydraulic motor (B) and rear hydraulic motor (C).
5. Secure hoses with cinch straps (D).

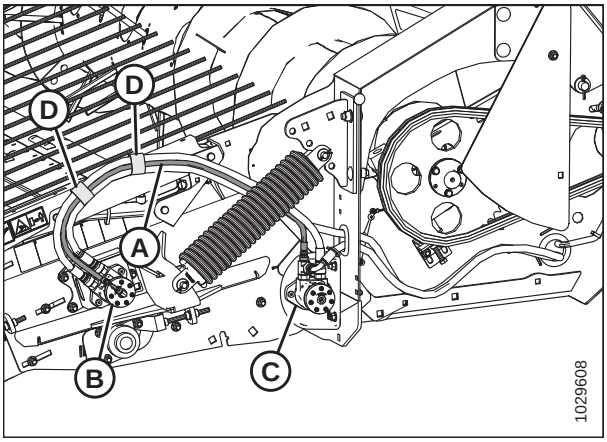

Figure 5.49: Left Side of Header — Model Year 2020 and Later

6. Secure hoses with clips (A) and cinch straps (B).

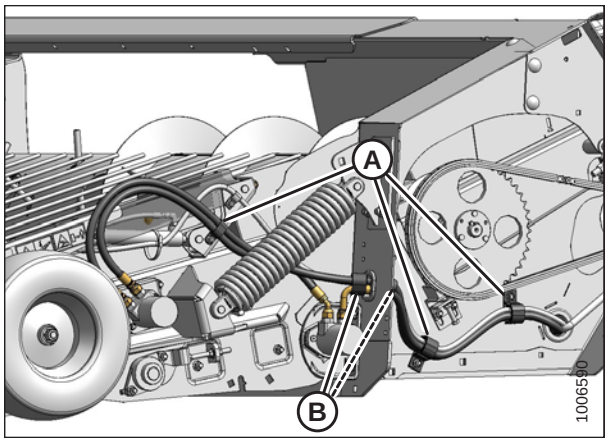

Figure 5.50: Left Side of Header — Model Year 2019 and Prior

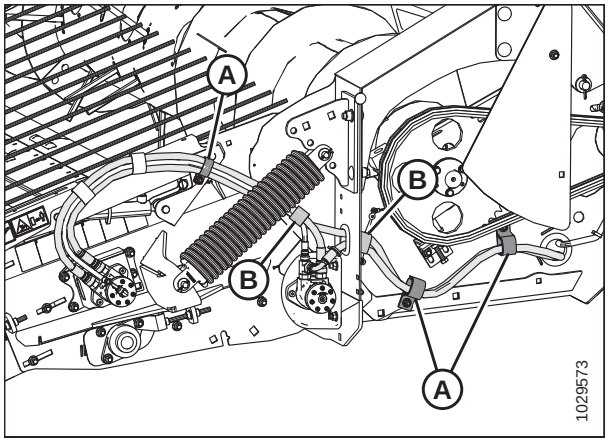

Figure 5.51: Left Side of Header — Model Year 2020 and Later

7. Install bottom beam cover (B), and tighten three M12 hex flange nuts (A) along lower edge of cover.
8. Close left endshield. Refer to *3.3.2 Closing Left Endshield, page 30*.

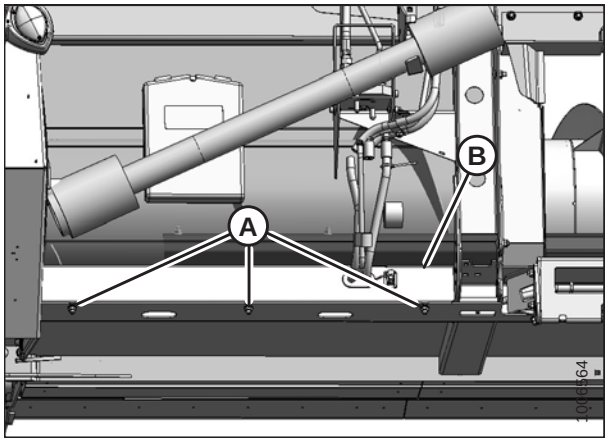

Figure 5.52: Bottom Beam Cover

5.5.4 Auger Drive

The chain driven auger is powered by a driveshaft connected directly to the combine feeder house, and auger speed depends on the feeder house speed. You can adjust auger speeds from the combine to suit crop conditions. Contact your Dealer for available sprocket options. Refer to *Auger Drive Sprockets, page 189* for procedure for changing sprockets.

Auger Drive Chain

Removing Auger Drive Chain

DANGER

To avoid bodily injury or death from unexpected startup of machine, always stop engine and remove key from ignition before leaving operator's seat for any reason.

1. Lower header to the ground, shut down the combine, and remove the key from the ignition.
2. Open left endshield (A). Refer to *3.3.1 Opening Left Endshield, page 29*.

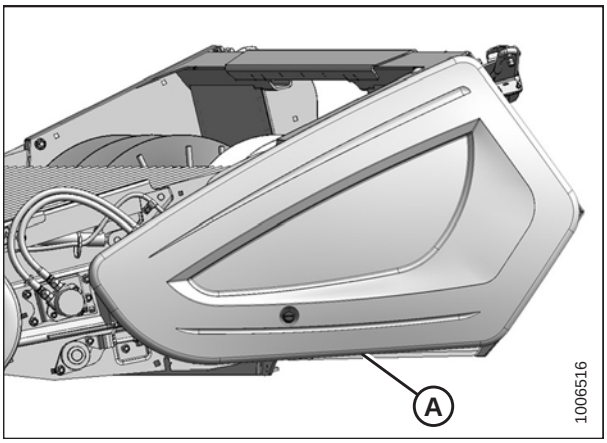

Figure 5.53: Left Endshield

3. Turn the tensioner bolt (A) to release tension on chain (B) until chain can be removed from drive sprocket (D). Refer to *Adjusting Auger Drive Chain Tension, page 188*.
4. Remove chain from driven sprocket (C).

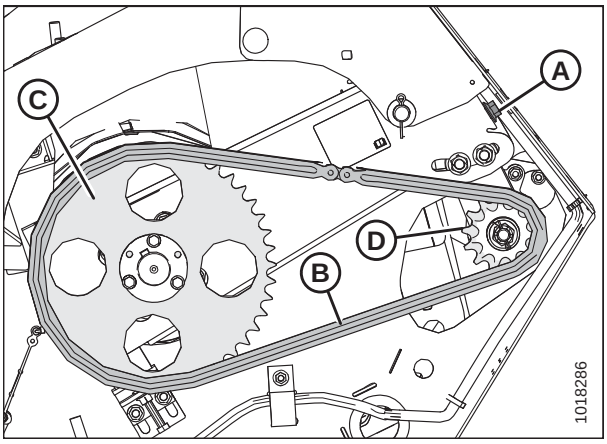

Figure 5.54: Auger Drive Chain

Installing Auger Drive Chain

1. Install chain (A) onto driven sprocket (B) and then onto drive sprocket (C).
2. Tighten chain. Refer to *Adjusting Auger Drive Chain Tension, page 188*.
3. Apply a liberal amount of SAE 30 engine oil to the chain (A).
4. Close left endshield. Refer to *3.3.2 Closing Left Endshield, page 30*.

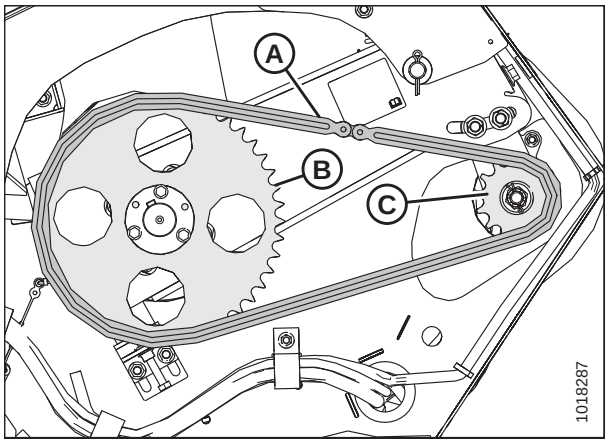

Figure 5.55: Auger Drive Chain

Adjusting Auger Drive Chain Tension

To adjust the tension of the auger drive chain, follow these steps:

1. Loosen the two M16 hex flange nuts (A).
2. To access tensioner bolt (B), remove the plug from the access hole in the endsheet.
3. Turn tensioner bolt (B) to adjust the chain tension.

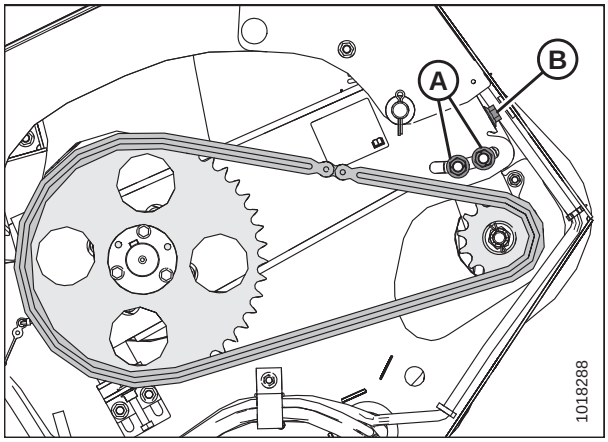

Figure 5.56: Auger Drive Chain

4. Rotate chain until the tightest point is at the midspan, and ensure there is 11–15 mm (7/16–9/16 in.) of deflection (A) when a force of 44.5 N (10 lbf) is applied at the midspan.

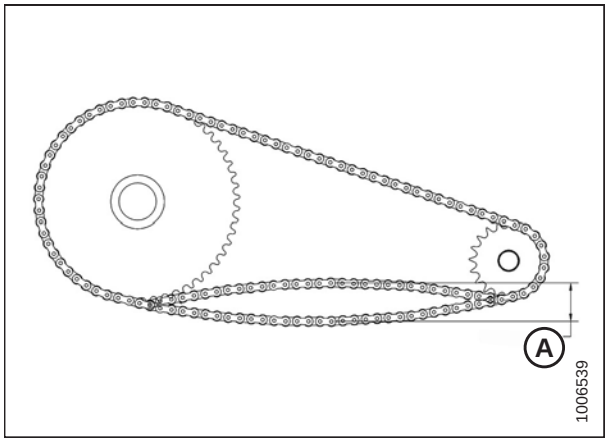

Figure 5.57: Chain Deflection

5. Torque nuts (A) to 217 Nm (160 lbf·ft).

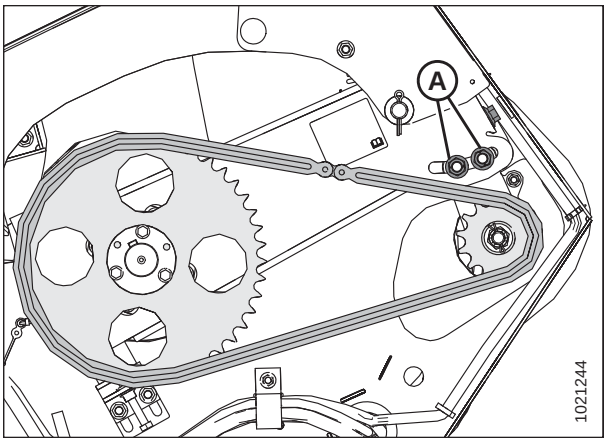

Figure 5.58: Auger Drive Chain

Auger Drive Sprockets

Removing Driven Sprocket

DANGER

To avoid bodily injury or death from unexpected startup of machine, always stop engine and remove key from ignition before leaving operator's seat for any reason.

1. Lower header to the ground, shut down the combine, and remove the key from the ignition.
2. Open left endshield (A). Refer to *3.3.1 Opening Left Endshield, page 29*. If more access is required, remove endshield. Refer to *3.3.3 Removing Left Endshield, page 31*.
3. Remove drive chain. Refer to *Removing Auger Drive Chain, page 187*.

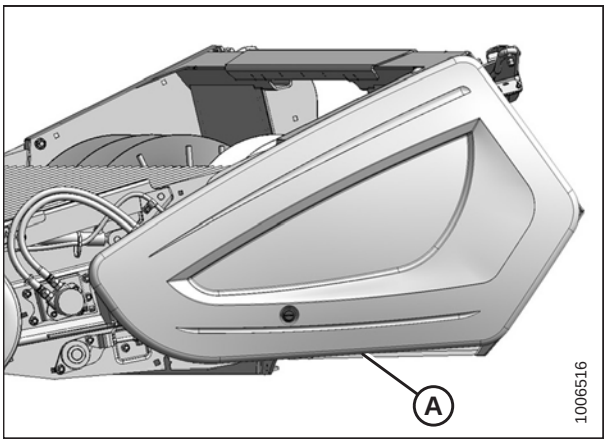

Figure 5.59: Left Endshield

4. Remove three M10 hex bolts (A) from tapered bushing (D) in sprocket (C) using a 16 mm wrench.
5. Reinstall two of the M10 hex bolts (A) into the threaded holes (B) in the tapered bushing (D).
6. Turn bolts into tapered bushing equal amounts in half-turn increments until the tapered bushing (D) becomes loose.
7. Remove tapered bushing (D) and sprocket (C) from shaft.
8. Retain keys from driveshaft and tapered bushing.
9. Clean and inspect components. Replace worn or damaged parts.

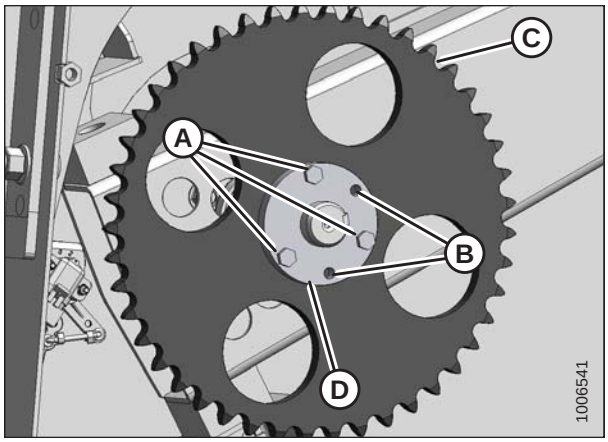

Figure 5.60: Driven Sprocket

Installing Driven Sprocket

1. Apply anti-seize compound to the mating surfaces of driveshaft (A), tapered bushing (B), and sprocket (C).
2. Install keys into driveshaft (A) and tapered bushing (B).
3. Insert tapered bushing (B) into sprocket (C) while aligning key with keyway in sprocket.
4. Align key in driveshaft (A) with keyway in tapered bushing (B), and slide bushing and sprocket (C) onto driveshaft.

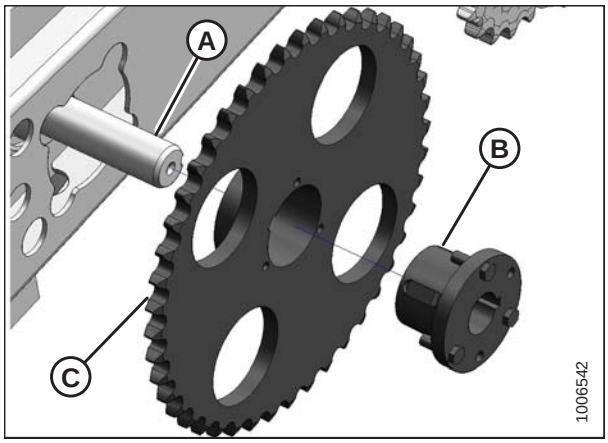

Figure 5.61: Driven Sprocket

5. Remove two M10 hex bolts from threaded holes (B) in tapered bushing (D).
6. Reinstall three M10 hex bolts (A) through tapered bushing (D) and into sprocket (C). Do **NOT** tighten.

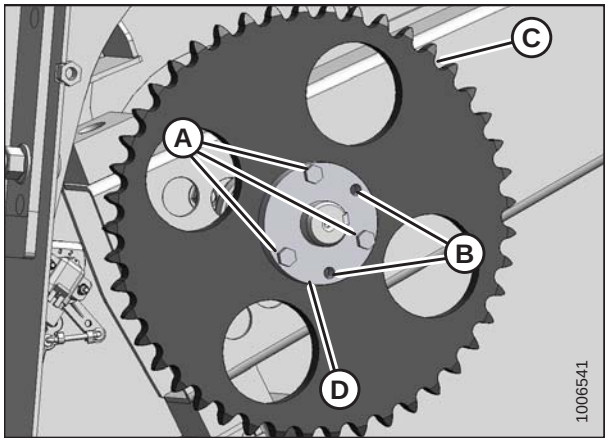

Figure 5.62: Driven Sprocket

7. Align driven sprocket (A) with drive sprocket (B) using a straight edge. The sprockets are aligned when the two faces are within 1 mm (3/64 in.) of each other.

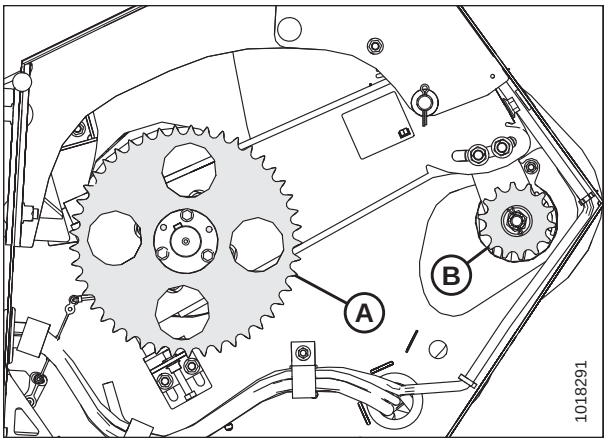

Figure 5.63: Sprockets

8. Torque three M10 hex bolts (A) in equal increments to 44 Nm (32 lbf·ft) while maintaining sprocket alignment.
9. Tap bushing (B) with a hammer and retorque. Repeat three times or until bolts no longer turn at 44 Nm (32 lbf·ft).

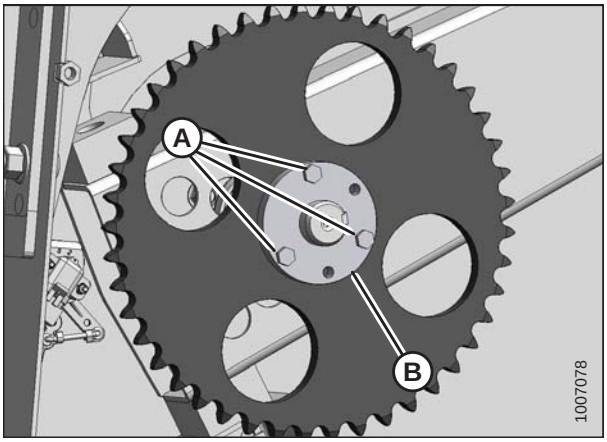

Figure 5.64: Driven Sprocket

10. Check alignment of sprockets. If misaligned more than 1 mm (3/64 in.), proceed as follows:
    a. Measure and record the position of tapered bushing (D) relative to the driveshaft.
    b. Remove three M10 hex bolts (A) from tapered bushing (D).
    c. Reinstall two of M10 hex bolts (A) into threaded holes (B) in tapered bushing (D).
    d. Turn M10 hex bolts (A) into tapered bushing (D) equal amounts in half-turn increments until the tapered bushing and sprocket (C) are moveable.
    e. Reposition the tapered bushing (D) to account for the misalignment.
    f. Repeat Step *5, page 190* to Step *10, page 191*.
    g. Check the sprockets' alignment.
    h. Repeat Step *10, page 191* until sprockets are in proper alignment.

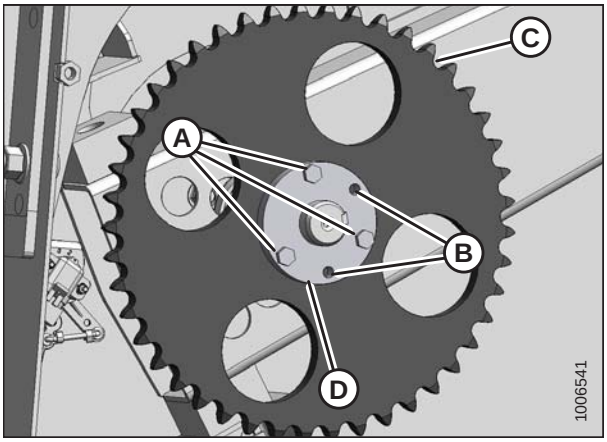

Figure 5.65: Driven Sprocket

11. Install and tension chain. Refer to *Installing Auger Drive Chain, page 188*.
12. Close left endshield. Refer to *3.3.2 Closing Left Endshield, page 30*.

Removing Drive Sprocket

DANGER

To avoid bodily injury or death from unexpected startup of machine, always stop engine and remove key from ignition before leaving operator's seat for any reason.

1. Lower header to the ground, shut down the combine, and remove the key from the ignition.
2. Open left endshield (A). For instructions, refer to *3.3.1 Opening Left Endshield, page 29*.

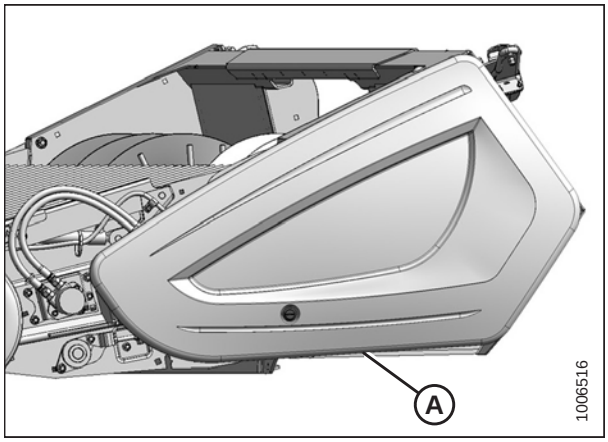

Figure 5.66: Left Endshield

3. If header is not attached to combine, place a pry bar or equivalent through a hole in the driven sprocket (A) and against the frame to stop the driveshaft from rotating.

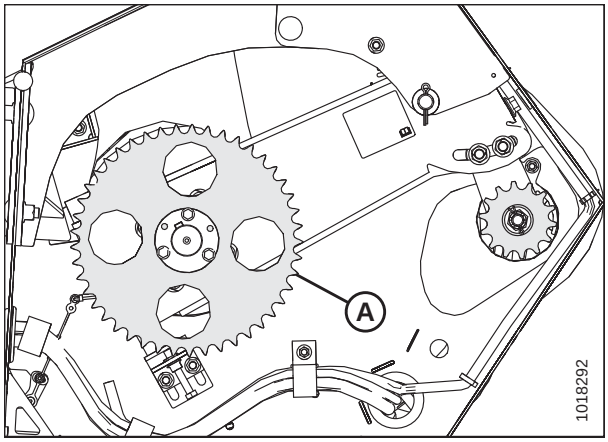

Figure 5.67: Driven Sprocket

4. Remove cotter pin (B).
5. Remove M20 castle nut (C) and washer (D) from driveshaft.
6. Remove chain (A). For instructions, refer to *Removing Auger Drive Chain, page 187*.

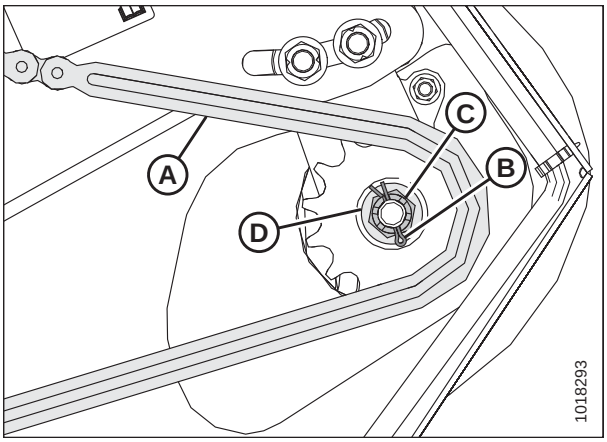

Figure 5.68: Drive Sprocket

7. Remove drive sprocket (A), using a puller if necessary.
8. Clean and inspect components. Replace worn or damaged parts.

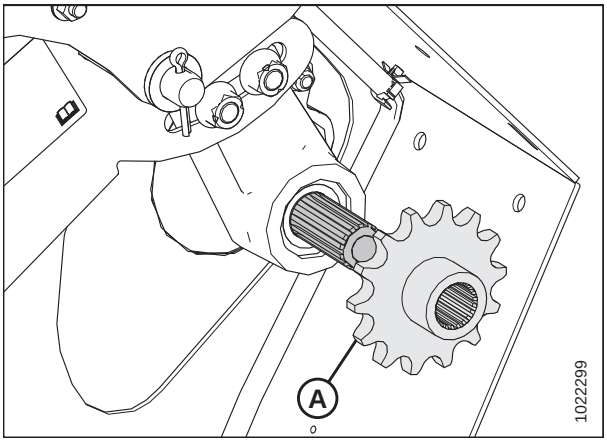

Figure 5.69: Drive Sprocket

Installing Drive Sprocket

1. Apply anti-seize compound to driveshaft (B) and drive sprocket (A) splines.

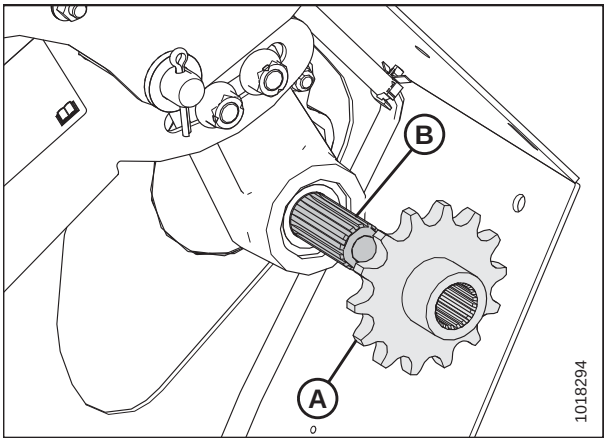

Figure 5.70: Drive Sprocket

2. Install drive sprocket (A), washer (B), and castle nut (C) onto driveshaft.
3. Reinstall drive chain, but do **NOT** fully tension. Refer to *Installing Auger Drive Chain, page 188*.

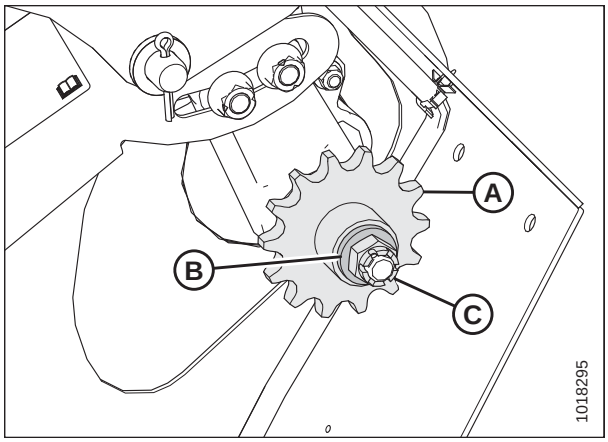

Figure 5.71: Drive Sprocket

4. If header is not attached to combine, place a pry bar or equivalent through a hole in the driven sprocket (A) and against the frame to stop the driveshaft from rotating.

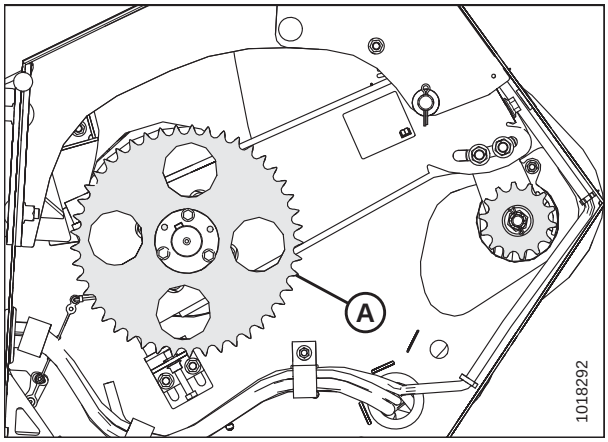

Figure 5.72: Driven Sprocket

5. Torque castle nut (A) to 68 Nm (50 lbf·ft). If slot in castle nut and hole in driveshaft are not aligned, continue to tighten castle nut to 81 Nm (60 lbf·ft). If alignment is still not achieved, back off castle nut until it is possible to install the cotter pin (B).
6. Install cotter pin (B) into driveshaft, and bend cotter pin around castle nut (A).
7. Set drive chain (C) tension. Refer to *Adjusting Auger Drive Chain Tension, page 188*.
8. Close left endshield. Refer to *3.3.2 Closing Left Endshield, page 30*.

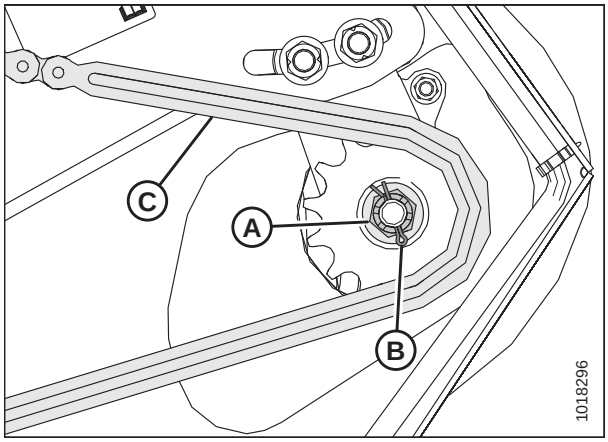

Figure 5.73: Drive Sprocket

5.6 Auger Maintenance

5.6.1 Replacing Auger Fingers

Periodically check auger for missing, bent, or severely worn fingers, and replace if necessary.

DANGER

To avoid bodily injury or death from unexpected start-up or fall of a raised machine, always stop engine and remove key before leaving the operator's seat, and always engage safety props before going under the machine for any reason.

1. Raise the hold-down fully, and engage lift cylinder safety props.
2. Shut down the combine, and remove the key from the ignition.
3. Remove two screws (A) from the access cover (B) closest to the auger finger (C) being serviced, and remove access cover.

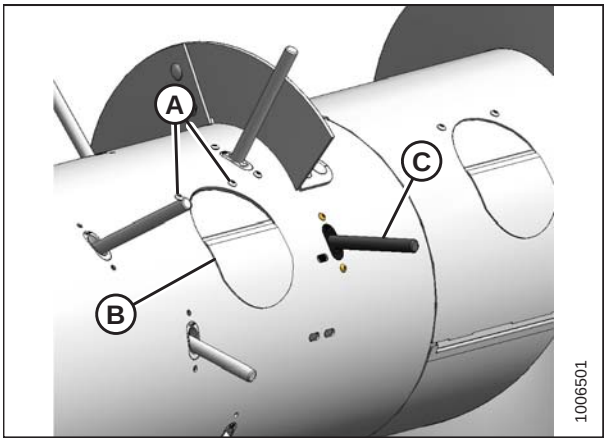

Figure 5.74: Access Cover

4. Reach inside the auger, remove hairpin (A), and pull auger finger (B) out of holder (C).
5. Reach inside the auger, swivel auger finger (B) away from holder (C), pull from plastic guide (D), and remove from auger through access hole.
6. From inside the auger, insert new auger finger (B) through plastic guide (D).
7. Insert auger finger (B) into holder (C), and secure auger finger in holder with hairpin (A). Install hairpin with the closed end facing the direction of the augers forward rotation.

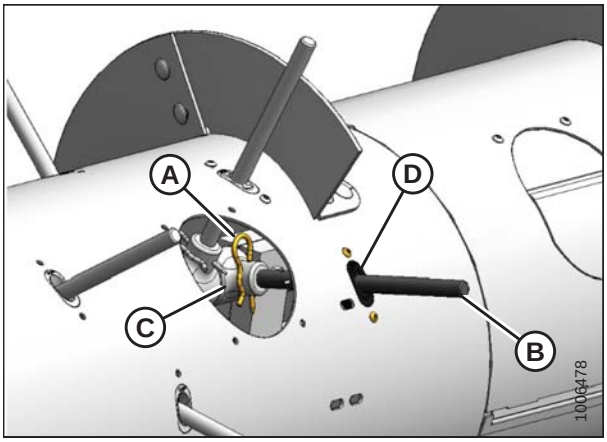

Figure 5.75: Auger Fingers

8. Install access cover (B) using two screws (A) coated with medium-strength threadlocker (Loctite® 243 or equivalent). Torque screws to 9 Nm (80 lbf·in).

   NOTE:

   If reusing hardware, apply a fresh coat of medium-strength threadlocker.

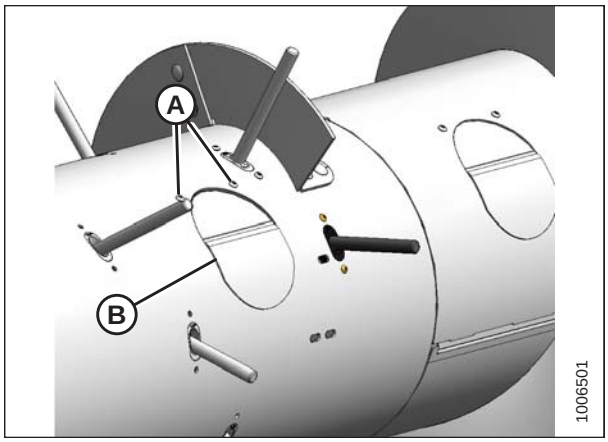

Figure 5.76: Access Cover

5.6.2 Replacing Auger Finger Guides

If the hole in the finger guide has elongated to the maximum length of 24 mm (15/16 in.), replace the finger guide.

DANGER

To avoid bodily injury or death from unexpected start-up or fall of a raised machine, always stop engine and remove key before leaving the operator's seat, and always engage safety props before going under the machine for any reason.

1. Raise the hold-down fully, and engage lift cylinder safety props.
2. Shut down the combine, and remove the key from the ignition.
3. Remove two screws (A) from the access cover (B) closest to the finger guide being replaced, and remove access cover.
4. Remove auger finger (C). Refer to *5.6.1 Replacing Auger Fingers, page 195*.

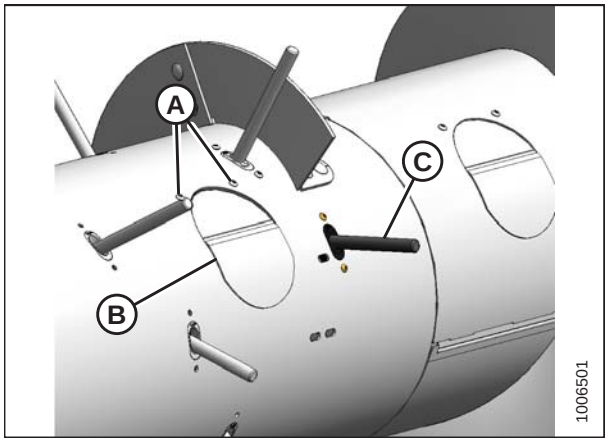

Figure 5.77: Access Cover

5. Remove two screws (A) from finger guide (B), and remove finger guide through access hole.

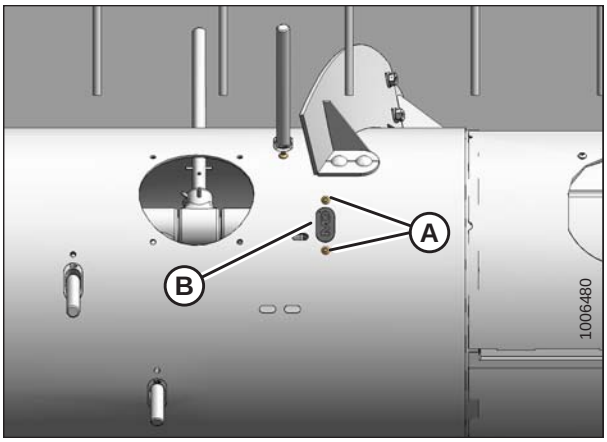

Figure 5.78: Auger Finger Guide

6. Reach inside the auger and install new finger guide (A) using existing screws (B) and tee nuts (C) as shown. Torque screws to 9 Nm (80 lbf·in).
7. Reinstall auger finger. Refer to *5.6.1 Replacing Auger Fingers, page 195*.

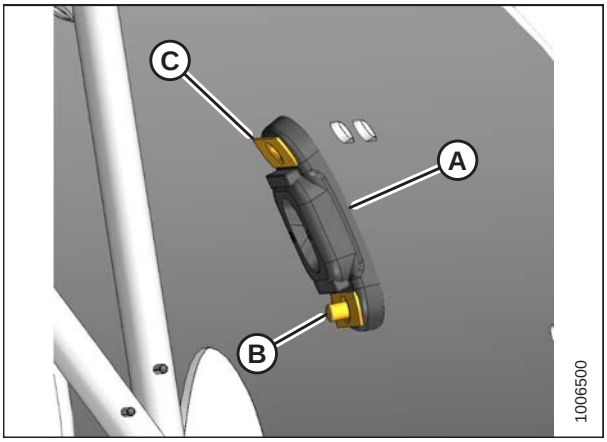

Figure 5.79: Auger Finger Guide

8. Install access cover (B) using two screws (A) coated with medium-strength threadlocker (Loctite® 243 or equivalent). Torque screws to 9 Nm (80 lbf·in).

   NOTE:

   If reusing hardware, apply a fresh coat of medium-strength threadlocker.

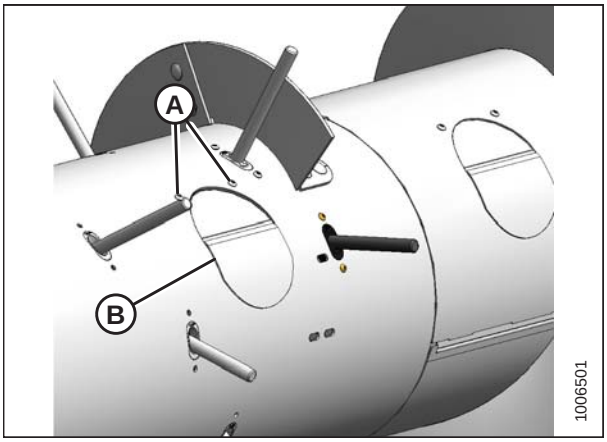

Figure 5.80: Access Cover

5.6.3 Replacing Auger Finger Holder

Periodically check auger for damaged or severely worn finger holders and replace if necessary.

DANGER

To avoid bodily injury or death from unexpected start-up or fall of a raised machine, always stop engine and remove key before leaving the operator's seat, and always engage safety props before going under the machine for any reason.

1. Raise the hold-down fully, and engage lift cylinder safety props.
2. Shut down the combine, and remove the key from the ignition.
3. Remove two screws (A) and remove center access cover (B).

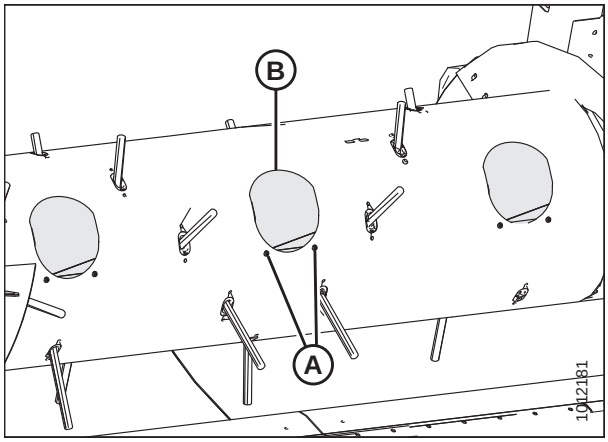

Figure 5.81: Center Access Cover

4. Remove two screws (A) and remove right access cover (B) if the finger holder requiring replacement is located on the right side of the auger, or remove two screws (C) and remove the left access cover (D) if the finger holder is located on the left side.

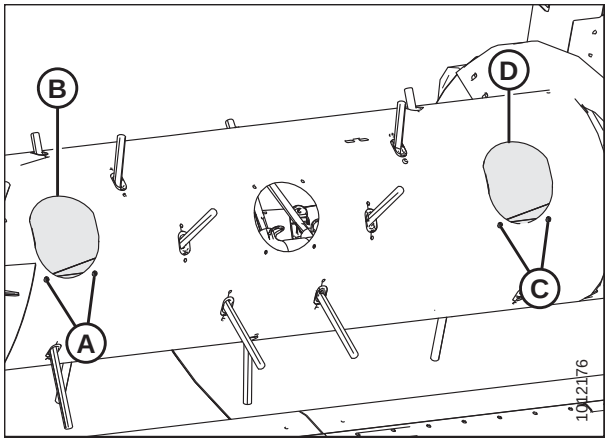

Figure 5.82: Left and Right Access Covers

5. Reach inside the auger, remove hairpin (A) from the auger finger (B) requiring holder replacement, and pull auger finger out of holder (C).

6. Reach inside the auger, swivel auger finger (B) away from holder (C), pull from plastic guide (D), and remove from auger.

   NOTE:

   Depending on the number of auger fingers (B) installed in the auger, there may be spare holders (C) on the shaft. Look inside the drum to see if there are any spare holders. If there are spare holders already installed, completely remove the damaged holder. To access the spare holder, remove auger fingers accordingly.

   IMPORTANT:

   There must always be 24 holders (C) on the shaft; otherwise, the holders may slide over and cause the auger fingers (B) to fall into the drum during operation.

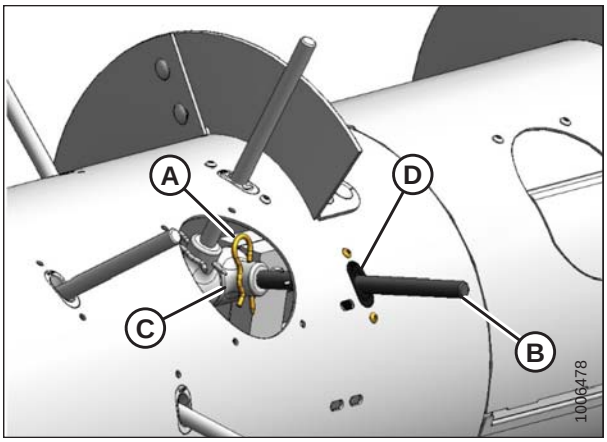

Figure 5.83: Auger Fingers

7. If the auger finger removed in Step *5, page 199* is on the right side of the auger, reach inside, and remove all the fingers between the damaged holder (A) and the right finger support clamp (B) as described in the following steps.

8. If the auger finger removed in Step *5, page 199* is on the left side of the auger, remove all the fingers between the damaged holder (C) and the left finger support clamp (D) as described in the following steps.

   NOTE:

   Middle auger sheet removed for illustration purposes.

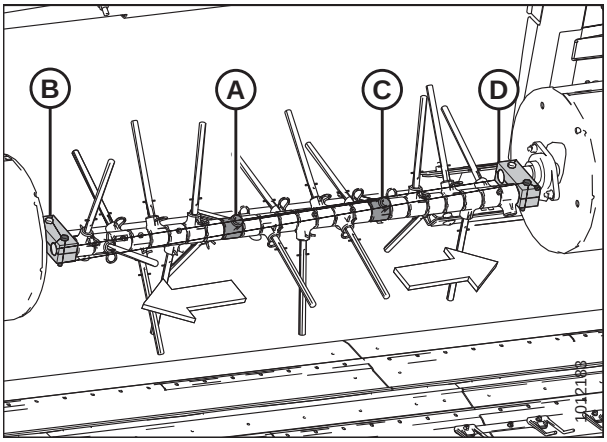

Figure 5.84: Auger Fingers

9. Reach inside the auger, remove two M10 hex head bolts, nuts, and washers (A), and remove finger support clamp (B) from the shaft.

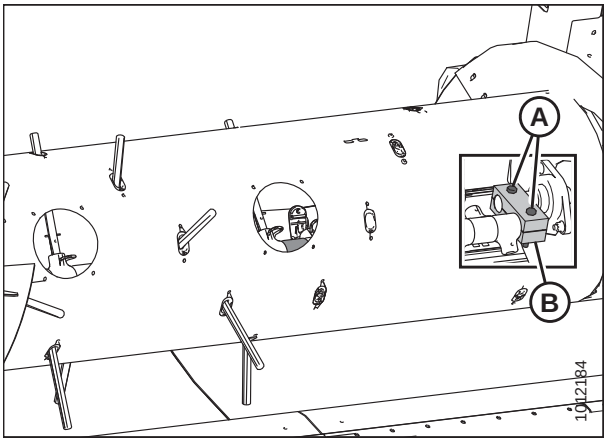

Figure 5.85: Left Side Auger Finger Support Clamp — Cutaway View Shown

10. Reach inside the auger, and slide the auger finger holders (A) off the end of the shaft (B).

    NOTE:

    Middle auger sheet removed for illustration purposes.

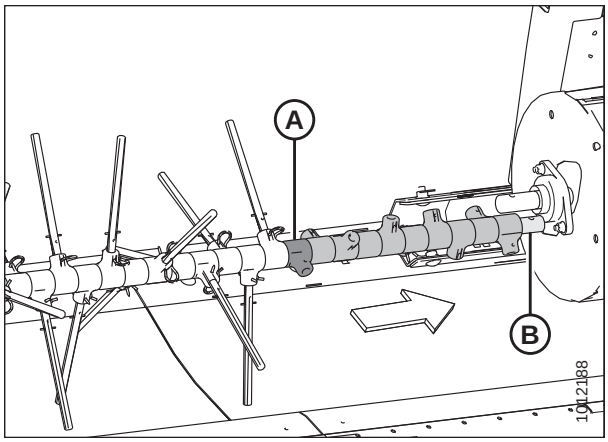

Figure 5.86: Left Side Auger Finger Holders

11. Reach inside the auger, and slide new auger finger holders (A) onto the shaft (B).

    NOTE:

    Middle auger sheet removed for illustration purposes.

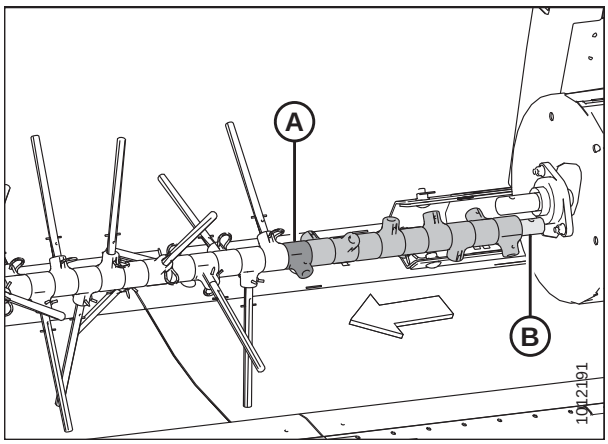

Figure 5.87: Left Side Auger Finger Holders

12. Reach inside the auger, place finger support clamp (B) onto shafts, and secure with two M10 hex head bolts, nuts, and washers (A). Torque bolts to 54–61 Nm (40–45 lbf·ft).

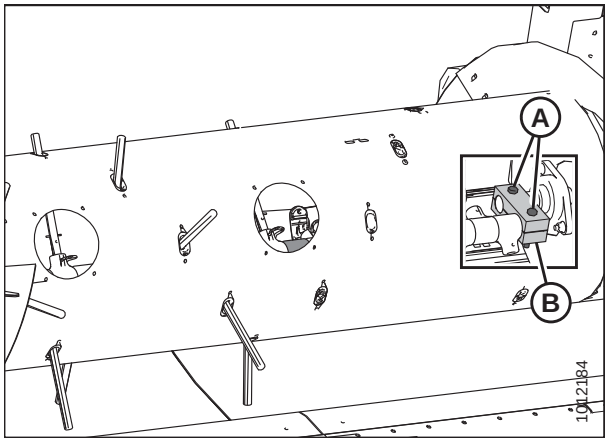

Figure 5.88: Left Side Auger Finger Support Clamp — Cutaway View Shown

13. Reach inside the auger, and reinstall auger fingers (B) through plastic guides (D) from the inside.

    NOTE:

    Replace worn or damaged auger fingers.

14. Insert auger fingers (B) into holders (C), and secure auger fingers in holder with hairpins (A). Install hairpins with closed end leading with respect to auger forward rotation.

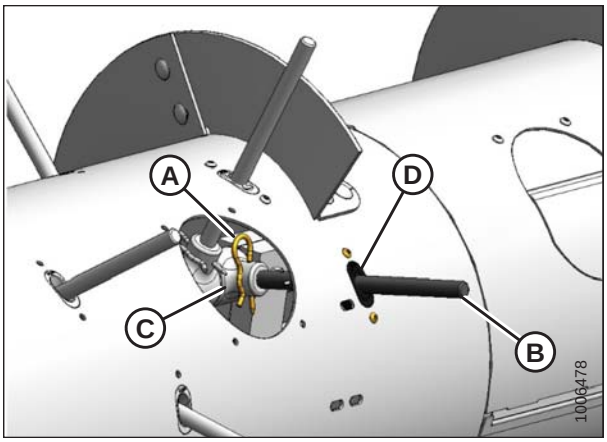

Figure 5.89: Auger Fingers

15. Install access covers (A) using two screws (B) coated with medium-strength threadlocker (Loctite® 243 or equivalent). Torque screws to 9 Nm (80 lbf·in).

    NOTE:

    If reusing hardware, apply a fresh coat of medium-strength threadlocker.

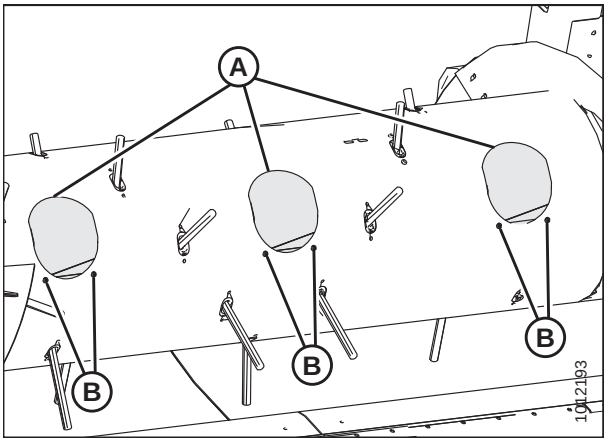

Figure 5.90: Access Covers

5.6.4 Replacing Stripper Plates

Replace any stripper plates and missing or damaged fasteners if the specified clearance cannot be maintained.

DANGER

To avoid bodily injury or death from unexpected startup of machine, always stop engine and remove key from ignition before leaving operator's seat for any reason.

1. Lower the header to the ground, shut down the combine, and remove the key from the ignition.

   NOTE:

   Access the auger/stripper plate area from the top of the header.

2. Remove four bolts and nuts (A) from stripper plate (B).
3. Replace stripper plate (B), and secure with four bolts and nuts (A), but do **NOT** fully tighten.
4. Adjust stripper plate (B) to achieve 3–8 mm (1/8–5/16 in.) clearance (C) from the auger flighting.
5. Tighten nuts (A).
6. Recheck the clearance.

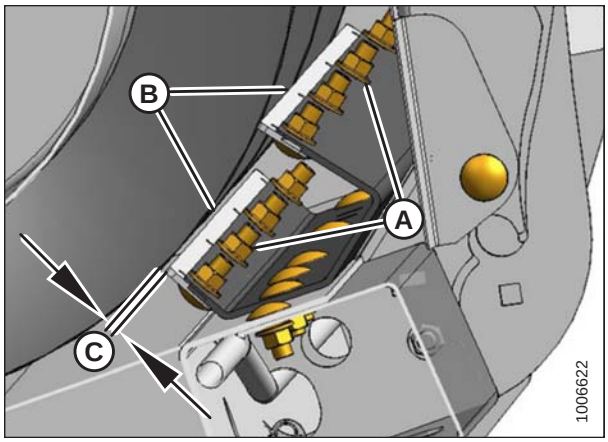

Figure 5.91: Stripper Plate Clearance

5.6.5 Replacing Flighting Extensions

With header removed from combine, proceed as follows:

1. Remove two access covers (A) from both sides of the center of the auger.

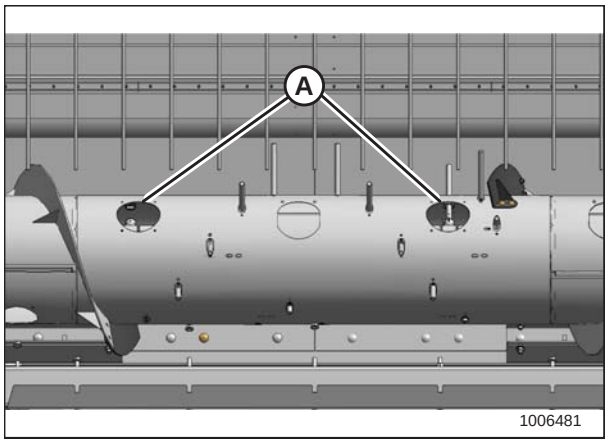

Figure 5.92: Auger Access Covers

2. Remove hardware (A) securing existing auger flighting extensions (B), and remove extensions. Retain hardware.

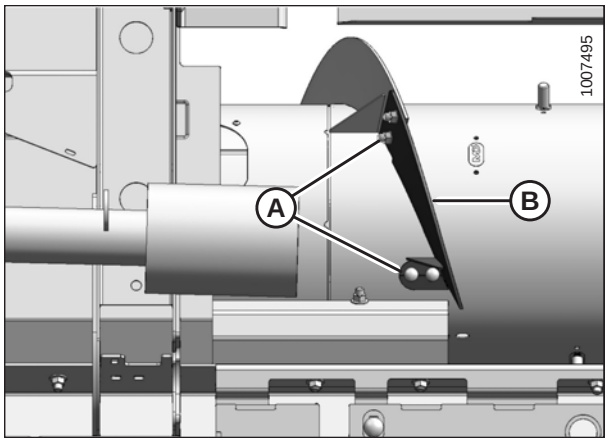

Figure 5.93: Flighting Extension

3. Place the new flighting extension (A) on the auger and ensure that new flighting is positioned on the outboard side of the existing flighting (B).
4. Secure flighting extension (A) to auger using existing hardware (C).

   NOTE:

   Install bolts (C) with heads facing inboard and nuts facing outboard.
5. Repeat for opposite side.

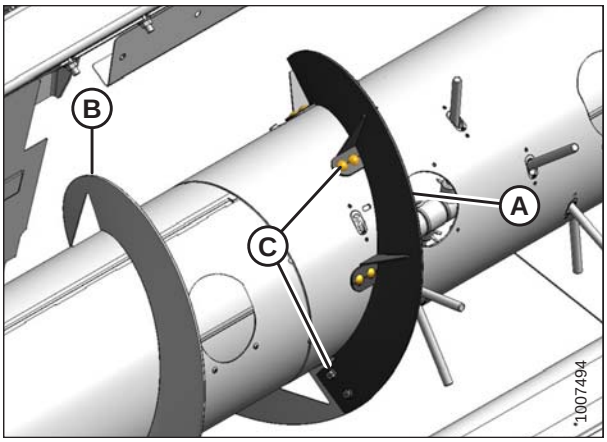

Figure 5.94: Flighting Extension

IMPORTANT:

To avoid damaging the auger, remove all loose hardware and tools from inside the auger.

6. Install access covers (A) using two screws (B) coated with medium-strength threadlocker (Loctite® 243 or equivalent). Torque screws to 9 Nm (80 lbf·in).

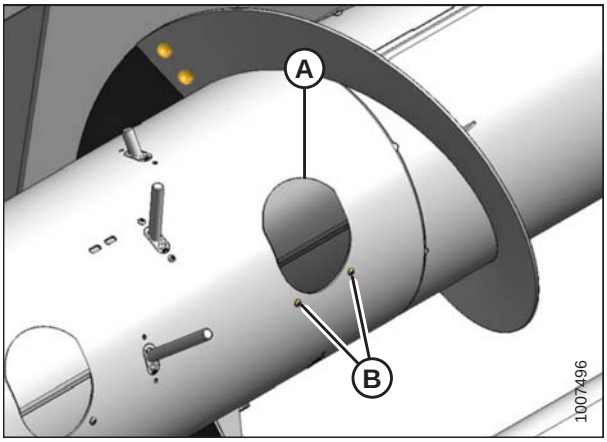

Figure 5.95: Access Cover

7. Rotate the auger manually to check for interference and to check the clearance between the auger flighting and stripper plates (B). Ensure clearance (C) is 3–8 mm (1/8–5/16 in.) and adjust nuts (A) if necessary. Refer to *Adjusting Stripper Plate Clearance, page 78*.

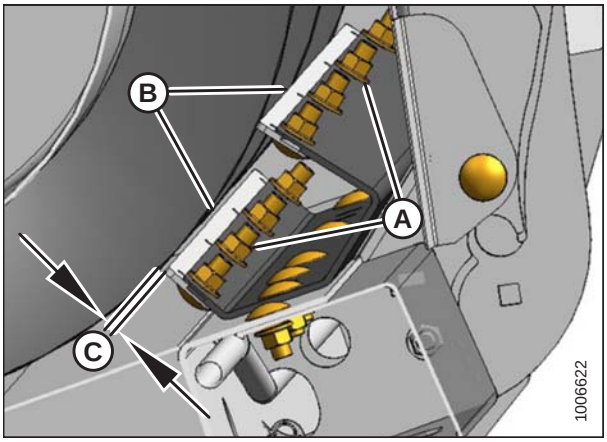

Figure 5.96: Stripper Plate Clearance

5.7 Decks

5.7.1 Draper Belts

Periodically check the draper belts for signs of wear and damage. Replace drapers that have stretched, have cuts or tears, or have worn slats. Replace missing or damaged fasteners, damaged connector bars, and damaged straps.

Removing Front Draper Belt

DANGER

To avoid bodily injury or death from unexpected start-up or fall of a raised machine, always stop engine and remove key before leaving the operator's seat, and always engage safety props before going under the machine for any reason.

1. Raise the hold-down fully and engage lift cylinder safety props. Refer to *3.5 Engaging Hold-Down Lift Cylinder Safety Props, page 37*.
2. Raise the header fully, and engage the combine lift cylinder safety props.
3. Stop the engine and remove the key from the ignition.
4. Release draper belt tension fully. Refer to *Adjusting Front Draper Belt Tension, page 86*.
5. Rotate draper belt (D) until connecting strip (B) is on the top side of the draper deck. Remove seven M6 flange nuts (A), belt edge protector (B), and pronged elevator bolts (C) from belt (D) (if removing the end belt).

   NOTE:

   Elevator bolts only need to be removed if replacing the draper.

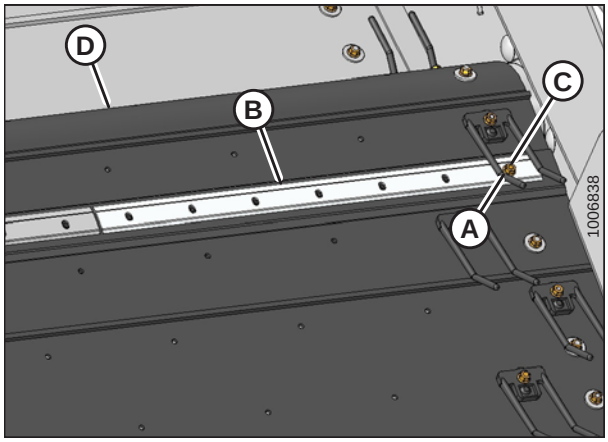

Figure 5.97: End Draper Belt

6. Remove M6 flange nuts (A), connector bar (B), and pronged elevator bolts (C) from belt (D).

   NOTE:

   Elevator bolts only need to be removed if replacing the draper.

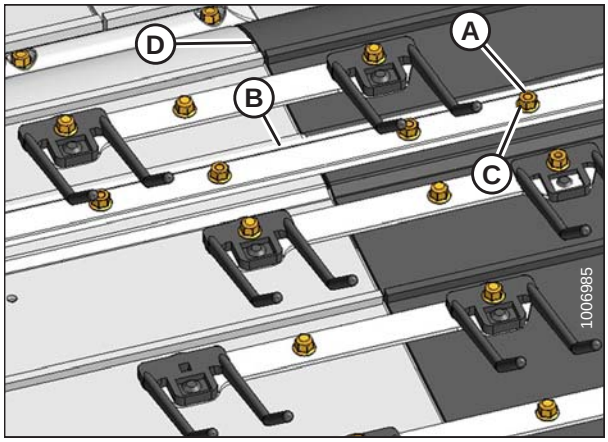

Figure 5.98: Front Draper Belt

7. Remove M6 flange nuts (A), fingers (B), and straps (C) connecting adjacent belts.
8. Remove draper belt (D).

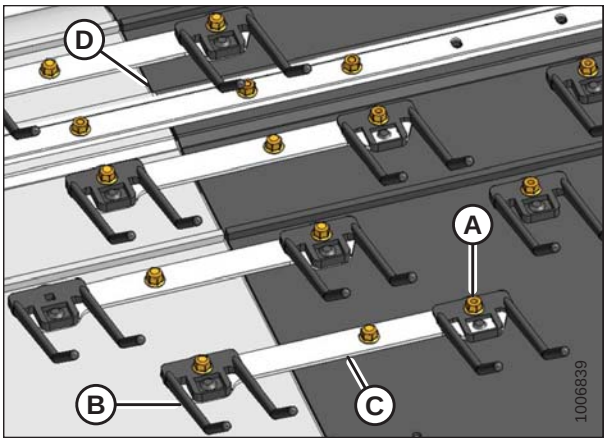

Figure 5.99: Front Draper Belt

Installing Front Draper Belt

NOTE:

If replacing more than one belt, it may be easier to remove all the belts and assemble them on the ground before installing on the draper.

1. Wrap new draper belt (A) around the rollers with slats facing outwards.

   IMPORTANT:

   Arrow on belt must point in direction of rotation.

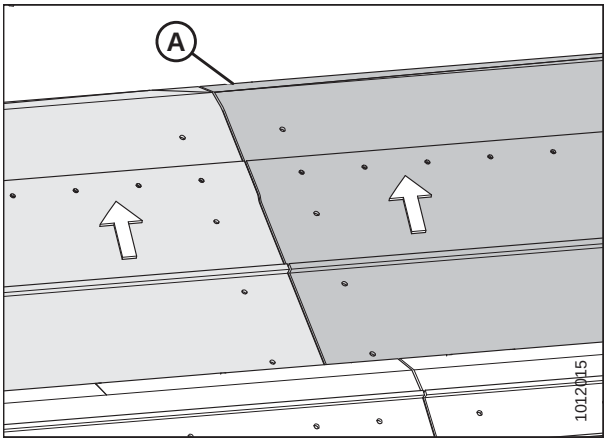

Figure 5.100: Front Draper Belt

2. Connect draper belt (D) using M6 x 15-1/2 pronged elevator bolts (A).
3. Attach edge protector (B) to pronged elevator bolts (A), and secure with M6 flange nuts (C) (if installing end belt). Do **NOT** tighten.
4. Torque M6 flange nuts (C) to 4–5.6 Nm (37–50 lbf·in).

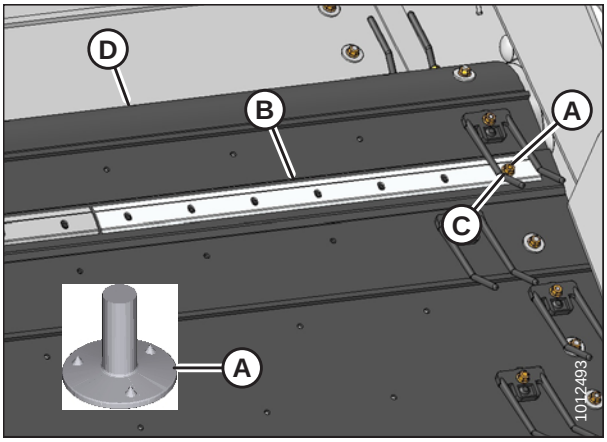

Figure 5.101: End Draper Belt

5. Install connector bars (A) onto bolts, and secure with M6 flange nuts (B).
6. Torque M6 flange nuts (B) to 4–5.6 Nm (37–50 lbf·in).

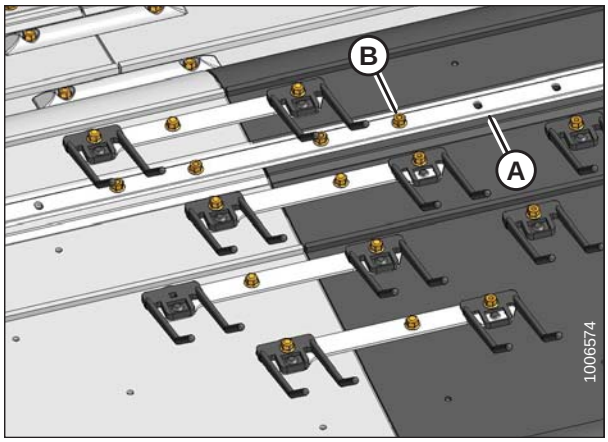

Figure 5.102: Front Draper Belt

7. Connect draper belt by installing M6 x 16 square neck elevator bolts (A) at center locations, and M6 x 23 square neck elevator bolts (B) at finger (D) locations.
8. Install straps (C) and fingers (D) onto bolts, and secure with M6 flange nuts (E).
9. Torque M6 flange nuts (E) to 4–5.6 Nm (37–50 lbf·in).
10. Tension draper belts. Refer to *Adjusting Front Draper Belt Tension, page 86*.

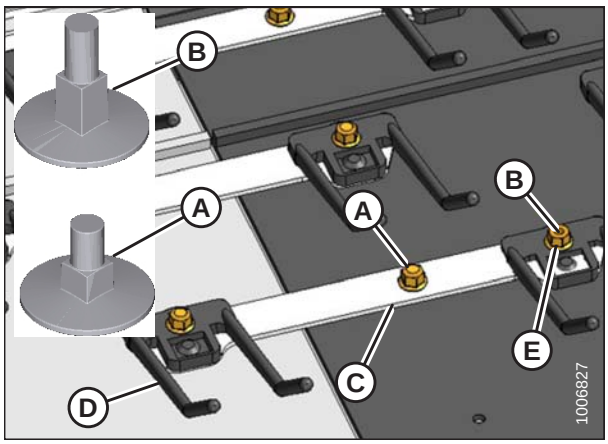

Figure 5.103: Front Draper Belt

Removing Rear Draper Belt

DANGER

To avoid bodily injury or death from unexpected start-up or fall of a raised machine, always stop engine and remove key before leaving the operator's seat, and always engage safety props before going under the machine for any reason.

1. Raise the hold-down fully and engage the lift cylinder safety props. Refer to *3.5 Engaging Hold-Down Lift Cylinder Safety Props, page 37*.
2. Raise the header fully, and engage the combine lift cylinder safety props.
3. Stop the engine and remove the key from the ignition.
4. Release the draper belt tension fully. Refer to *Adjusting Rear Draper Belt Tension, page 88*.
5. Rotate draper belt (D) until connecting strip (B) is on the top side of the draper deck. Remove seven M6 flange nuts (A), belt edge protector (B), and pronged elevator bolts (C) from belt (D) (if removing the end belt).

   NOTE:

   Elevator bolts only need to be removed if replacing the draper.

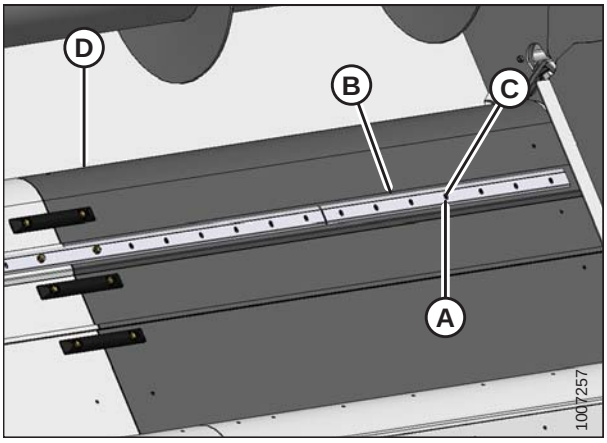

Figure 5.104: End Draper Belt

6. Remove M6 flange nuts (A), connector bar (B), and pronged elevator bolts (C) from belt (D).

   NOTE:

   Elevator bolts only need to be removed if replacing the draper.

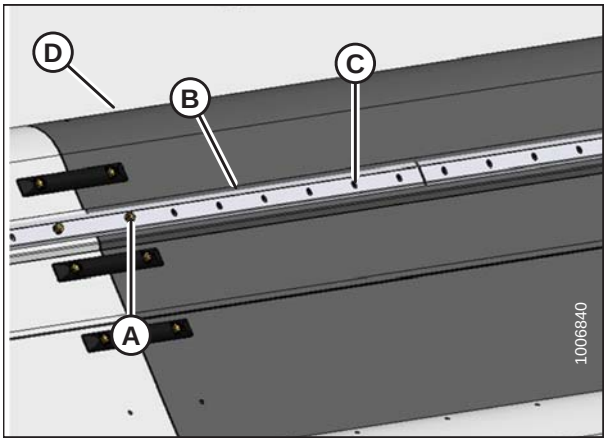

Figure 5.105: Rear Draper Belt

7. Remove M6 flange nuts (A) and straps (B) connecting adjacent belts.
8. Remove elevator bolts (C).
9. Remove draper belt (D).

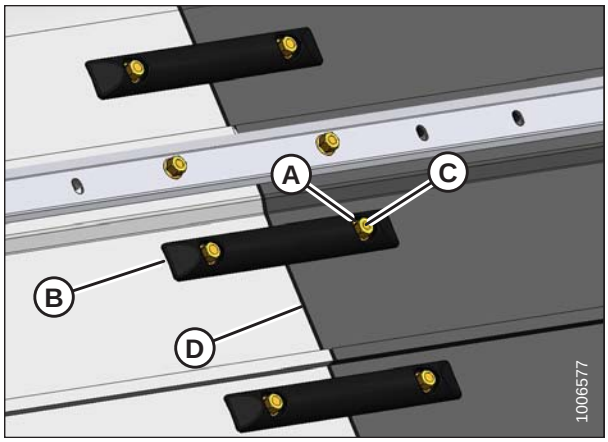

Figure 5.106: Rear Draper Belt

Installing Rear Draper Belt

NOTE:

If replacing more than one belt, it may be easier to remove all the belts and assemble them on the ground before installing them on the draper.

1. Wrap draper belt (A) around the rollers with the slats facing outwards.

   IMPORTANT:

   The arrow on belt (A) must point in the direction of rotation.

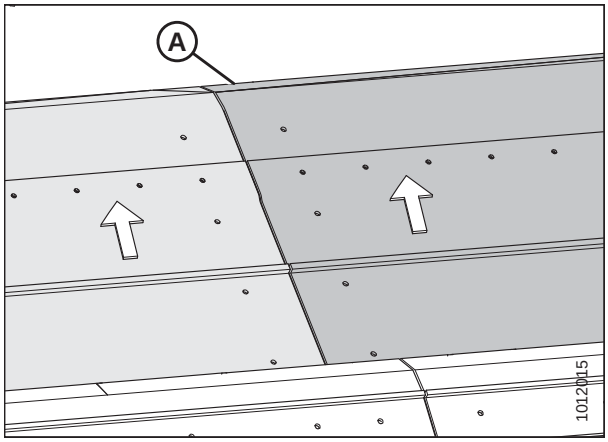

Figure 5.107: End Draper Belt

2. Connect draper belt (D) using M6 x 15-1/2 pronged elevator bolts (A).
3. Attach edge protector (B) to pronged elevator bolts (A), and secure with M6 flange nuts (C) (if installing an end belt). Do **NOT** tighten.
4. Torque M6 flange nuts (C) to 4–5.6 Nm (37–50 lbf·in).

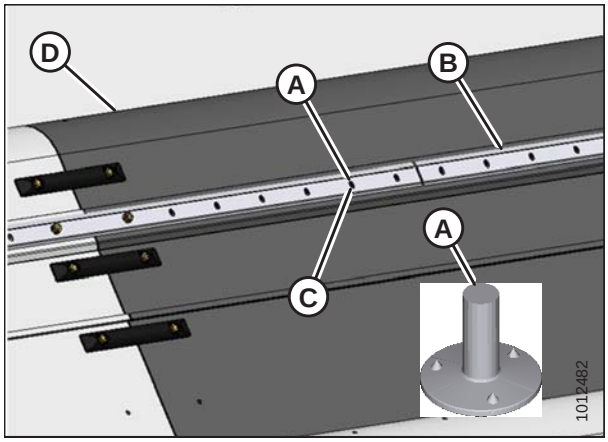

Figure 5.108: End Draper Belt

5. Install connector bars (A) onto the bolts, and secure with M6 flange nuts (B).
6. Torque M6 flange nuts (B) to 4–5.6 Nm (37–50 lbf·in).
7. Install two square neck elevator bolts (C) at each strap location.

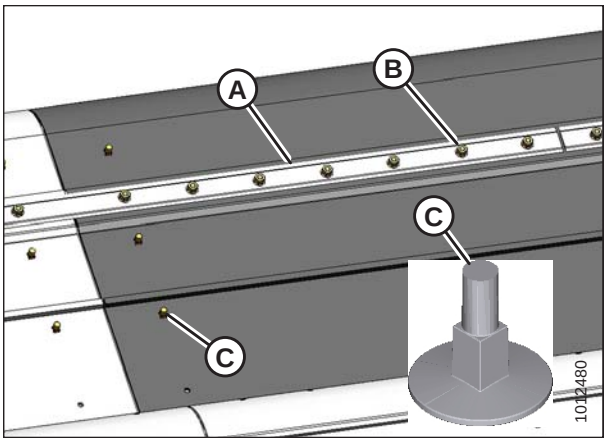

Figure 5.109: Front Draper Belt

8. Install straps (B) onto the bolts, and secure with M6 flange nuts (A).
9. Torque M6 flange nuts (A) to 4–5.6 Nm (37–50 lbf·in).
10. Tension the draper belts. Refer to *Adjusting Rear Draper Belt Tension, page 88* for instructions.

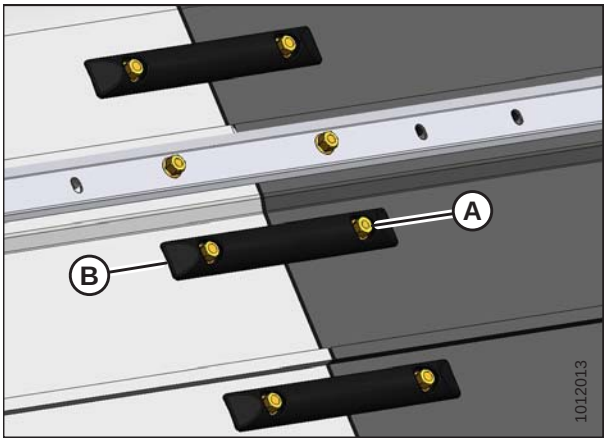

Figure 5.110: Front Draper Belt

5.7.2 Draper Fingers and Guides

Replace any broken or worn fingers to maintain machine performance. Excessively worn fingers will reduce picking efficiency, resulting in losses that far exceed the cost of new fingers.

The guides, which maintain draper tracking, are located along the outboard edge on the inside of the right draper belt on both decks. If any guide is worn enough to cause large amounts of draper tracking/shifting, replace the guide. Check to make sure the guides are aligned perpendicular to the direction of draper travel. Excessively worn or misaligned guides can cause the drapers to shift and ride up on the frame causing premature draper edge wear and draper tearing.

NOTE:

It may be necessary to remove the draper belt when replacing the fingers/guides. Refer to *Removing Front Draper Belt, page 204* or *Removing Rear Draper Belt, page 207*.

Replacing Draper Fingers

DANGER

To avoid bodily injury or death from unexpected start-up or fall of a raised machine, always stop engine and remove key before leaving the operator's seat, and always engage safety props before going under the machine for any reason.

1. Raise the hold-down fully, and engage the lift cylinder safety props.
2. Raise the header fully, and engage the combine lift cylinder safety props.
3. Stop the engine, and remove the key from the ignition.
4. Remove M6 flange nut (A) securing finger (B) to the draper belt.
5. Remove finger (B) and replace it with a new finger.
6. Secure with M6 flange nut (A).
7. Torque flange nut (A) to 4–5.6 Nm (37–50 lbf·in).

   NOTE:

   Hold the finger to prevent it from turning while tightening the nut.

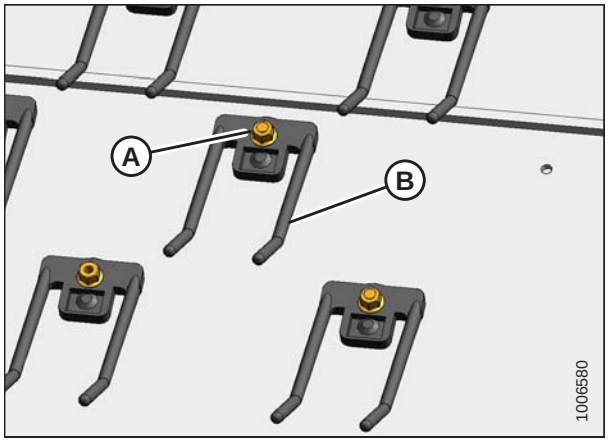

Figure 5.111: Draper Fingers

Replacing Draper Guide

DANGER

To avoid bodily injury or death from unexpected start-up or fall of a raised machine, always stop engine and remove key before leaving the operator's seat, and always engage safety props before going under the machine for any reason.

NOTE:

Illustrations in this procedure show the view from the lower left side of the machine.

1. Raise the hold-down fully, and engage lift cylinder safety props.
2. Raise the header fully, and engage the combine lift cylinder safety props.
3. Stop the engine, and remove the key from the ignition.
4. Release draper belt (D) tension fully.
5. Pull the draper belt (D) away from the frame from under the deck to expose guide (C).
6. Remove the M6 flange nut (A) and washer (B) securing guide (C) to the draper belt (D). If guide is under a finger (E), remove the finger.
7. Remove guide (C) and elevator bolt (F). Discard the old guide.
8. Place a new guide (C) onto the M6 x 26 elevator bolt (F), and install onto the draper belt (D).
9. Install M6 washer (B) and flange nut (A).

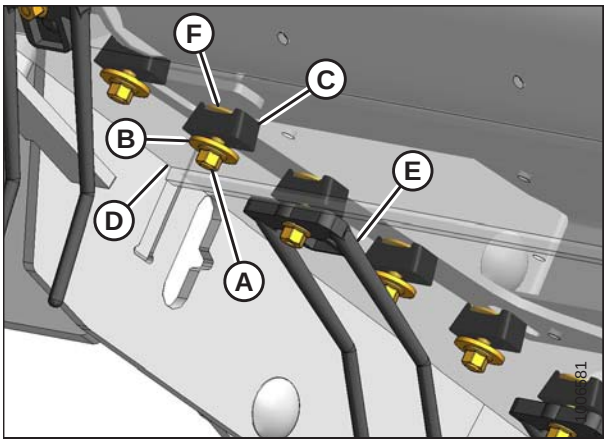

Figure 5.112: Draper Guide

10. Use an M6 x 30 elevator bolt (A) if guide (D) is in a finger location, and install the finger (B) **BEFORE** installing the flange nut (C).
11. Torque flange nut (C) to 4–5.6 Nm (37–50 lbf·in). Hold the finger (B) or guide (D) to prevent turning while tightening flange nut.

    IMPORTANT:

    Ensure guides (D) are perpendicular to the direction of draper travel.
12. Rotate draper belt manually to access all the guides (D).
13. Tighten the draper belt. Refer to *Adjusting Rear Draper Belt Tension, page 88* or *Adjusting Front Draper Belt Tension, page 86*.

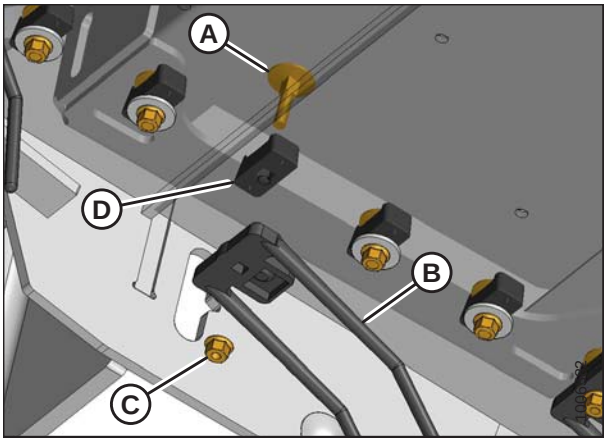

Figure 5.113: Draper Guide

5.7.3 Draper Deck Roller Bearings

Each draper deck roller is supported by two self-aligning, non-greasable roller bearings (A). Replace the roller bearings if they are worn or damaged.

NOTE:

Top image is the right side of header, and bottom image is the left side of header.

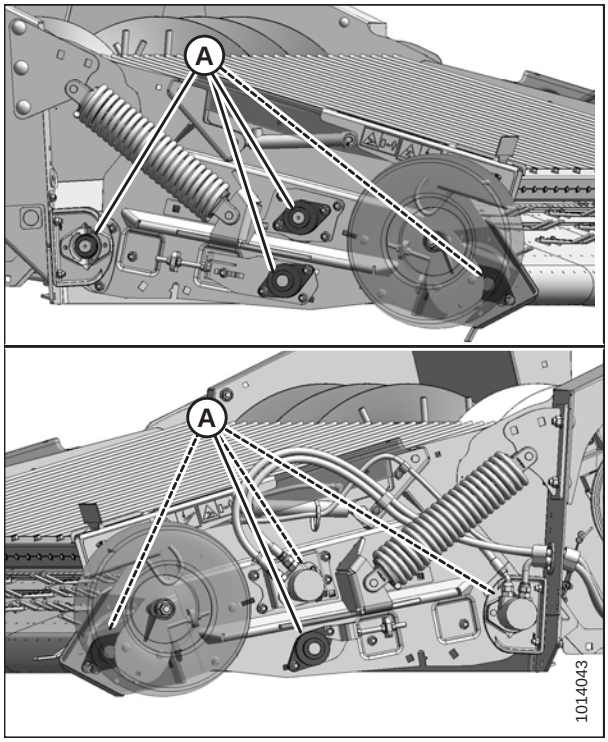

Figure 5.114: Draper Roll Bearings

Replacing Drive Roller Bearing on Left Side of Rear Deck

DANGER

To avoid bodily injury or death from unexpected startup of machine, always stop engine and remove key from ignition before leaving operator's seat for any reason.

1. Lower the hold-down fully.
2. Lower header to the ground until the two float springs are loose.
3. Stop the engine, and remove the key from the ignition.
4. Release draper belt tension fully. Refer to *Adjusting Rear Draper Belt Tension, page 88*.
5. Support the deck at both ends by placing a wooden block (A) under the frame close to the bearing.

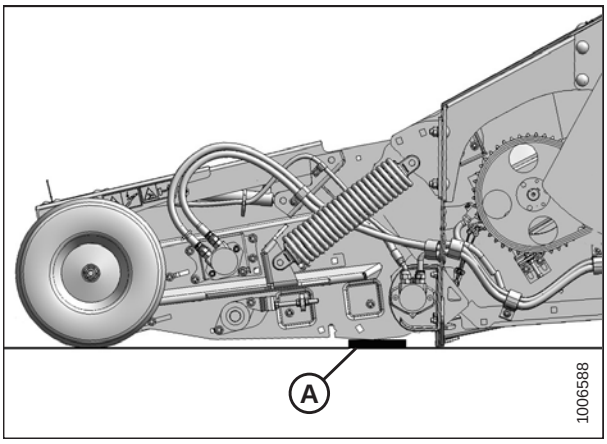

Figure 5.115: Wooden Block

6. Open left endshield (A). Refer to *3.3.1 Opening Left Endshield, page 29* for instructions.

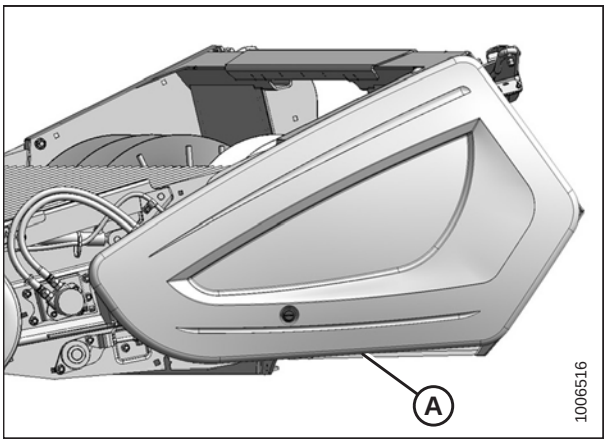

Figure 5.116: Left Endshield

7. Remove rear hydraulic motor (A). Refer to *Removing Rear Hydraulic Motor, page 177* for instructions.

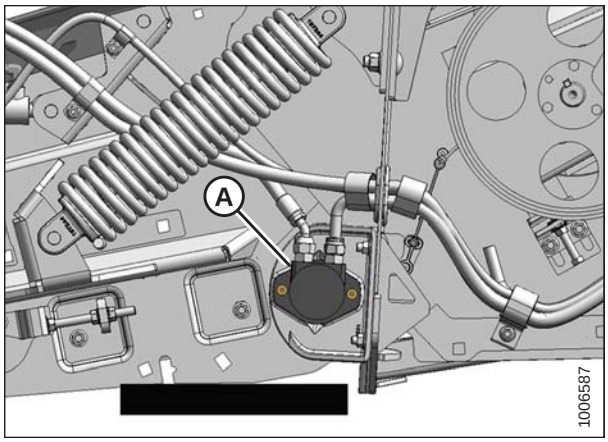

Figure 5.117: Rear Hydraulic Motor

8. Turn the roller manually until setscrew (A) in lock collar (B) lines up with the recess in bearing support (C).
9. Loosen setscrew (A) in lock collar (B) using a 6 mm hex key. Rotate the collar counterclockwise to loosen and remove it.

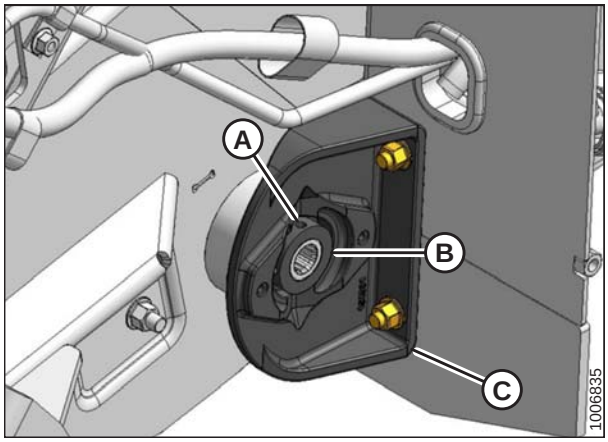

Figure 5.118: Left Side Rear Deck

10. Ensure the deck is fully supported, and check that the float spring assembly is loose. You may need to raise the deck slightly to loosen the assembly.
11. Remove four nuts (A) attaching bearing support (B) to the frame.

    NOTE:

    Ensure that the height controller is not damaged when removing bolts.
12. Pull bearing support (B) off the roller shaft.

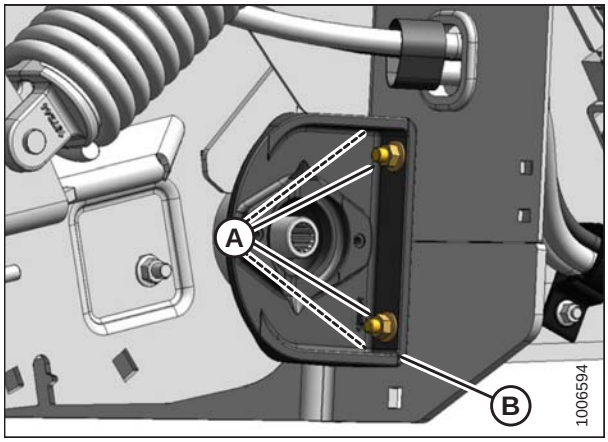

Figure 5.119: Left Side Rear Deck

13. Swivel bearing (A) 90 degrees in the support until the outer race lines up with the slots in the bearing support.
14. Push out bearing (A).

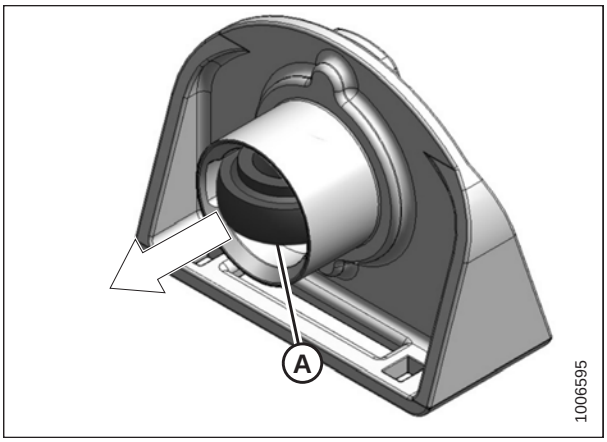

Figure 5.120: Bearing Support

15. Line up new bearing (A) with the slots in the bearing support, and push the bearing into the bearing support.
16. Swivel the bearing 90 degrees and slide it into the groove inside the bearing support.

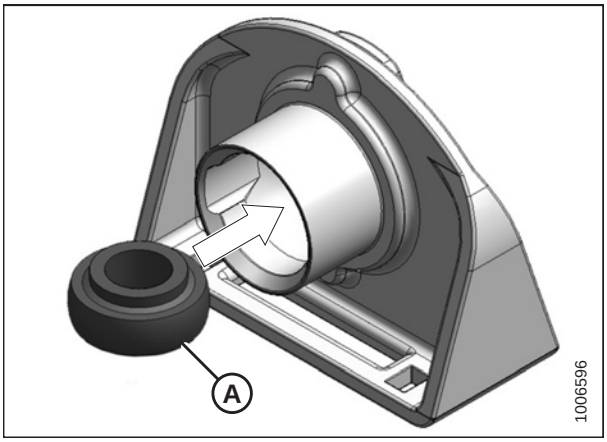

Figure 5.121: Bearing Support

17. Replace bushing (A), if necessary.

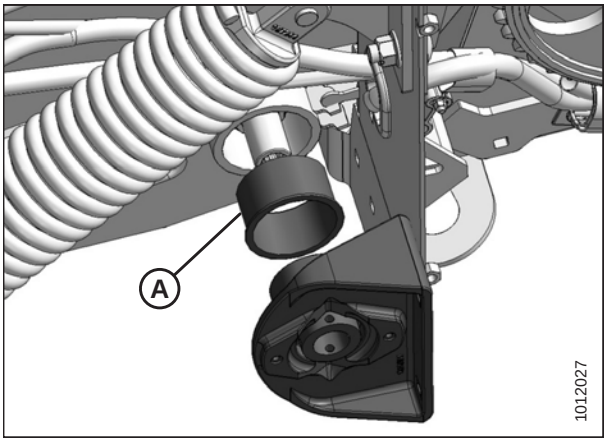

Figure 5.122: Left Side Rear Deck

18. Place bearing support (B) on roller shaft (A).
19. Position the bearing assembly's base against the frame, and align the mounting holes.

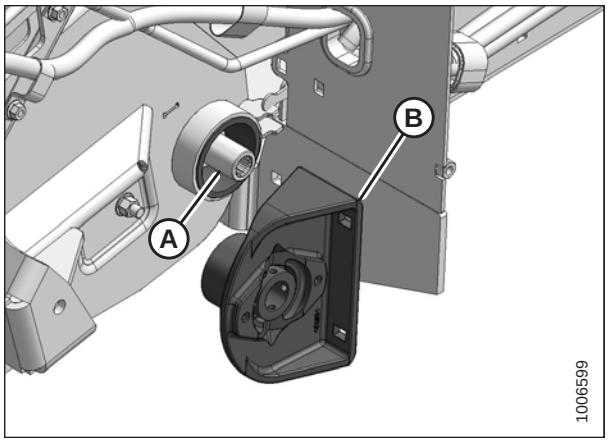

Figure 5.123: Left Side Rear Deck

20. Install two M12 x 30 carriage bolts (A) in the upper holes and two M12 x 40 carriage bolts (B) in the lower holes. Bolt heads must face aft. Secure with lock nuts.

    NOTE:

    Ensure the height controller is not damaged when installing bolts.

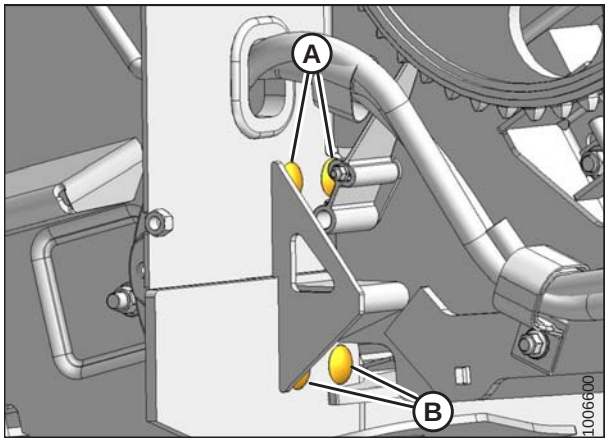

Figure 5.124: Left Side Rear Deck

21. Install lock collar (B) onto the bearing, and rotate clockwise until tight.
22. Turn the roller manually until setscrew (A) in lock collar (B) lines up with the recess in bearing support (C).
23. Tighten setscrew (A) using a 6 mm hex key.
24. Align the draper deck rollers. Refer to *Aligning Rear Draper Deck Rollers, page 222* for instructions.
25. Install the hydraulic motor. Refer to *Installing Rear Hydraulic Motor, page 178* for instructions.
26. Tighten the draper belt. Refer to *Adjusting Rear Draper Belt Tension, page 88* for instructions.

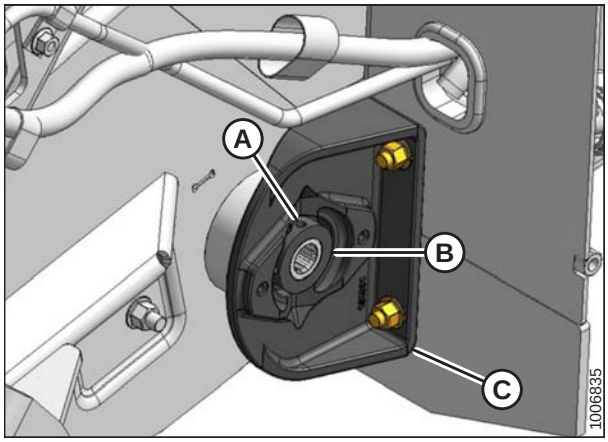

Figure 5.125: Left Side Rear Deck

Replacing Drive Roller Bearing on Right Side of Rear Deck

DANGER

To avoid bodily injury or death from unexpected startup of machine, always stop engine and remove key from ignition before leaving operator's seat for any reason.

1. Lower the hold-down fully.
2. Lower header to the ground until the two float springs are loose.
3. Stop the engine, and remove the key from the ignition.
4. Release draper belt tension fully. Refer to *Adjusting Rear Draper Belt Tension, page 88* for instruction.
5. Support the deck at both ends by placing a wooden block (A) under the frame close to the bearing.
6. Check that the float springs are loose.

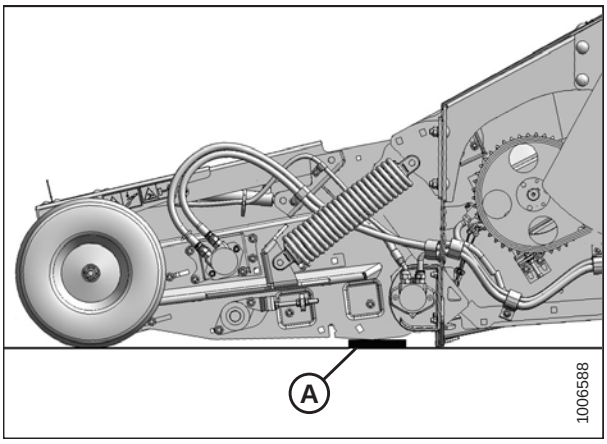

Figure 5.126: Wooden Block

7. Loosen nuts (A) on bearing support (B) on the right side of the header, remove draper speed sensor assembly, and move it clear of work area.

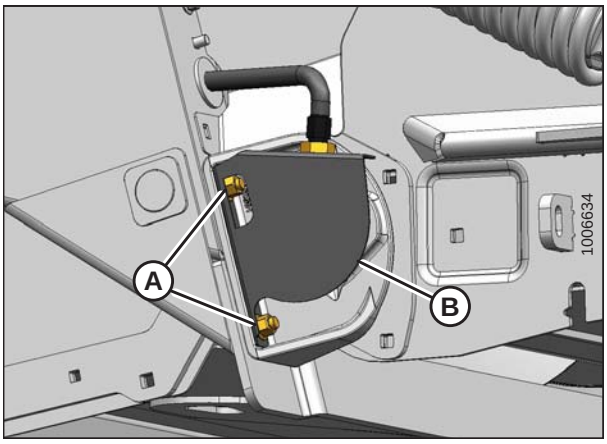

Figure 5.127: Right Side Rear Deck

8. Remove screws (A), and remove cover (B) from inboard side of right endsheet to access the bearing mounting bolts.

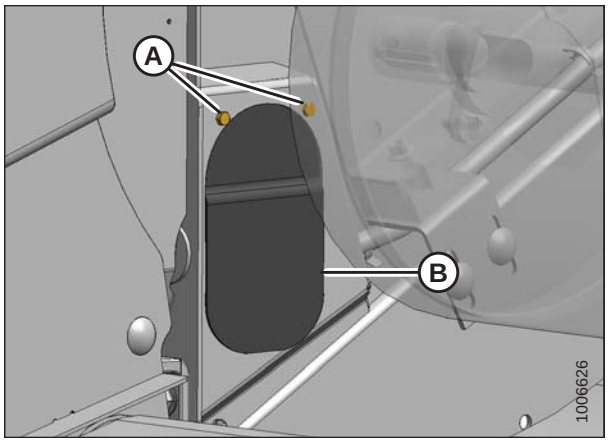

Figure 5.128: Right Side Rear Deck

9. Remove bolt (A), and remove speed sensor disc (B).

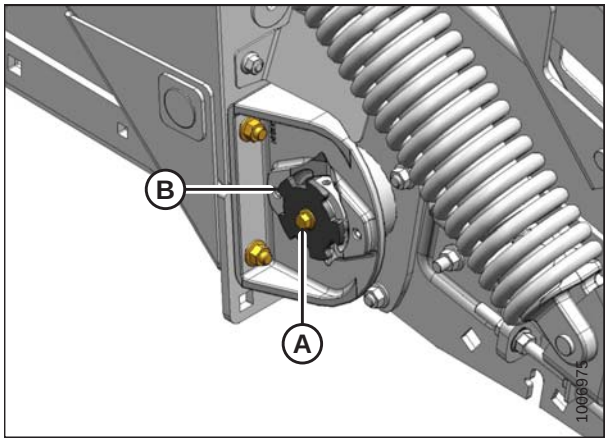

Figure 5.129: Right Side Rear Deck

10. Turn the roller manually until setscrew (A) in lock collar (B) lines up with the recess in bearing support (C).
11. Loosen setscrew (A) in lock collar (B) using a 6 mm hex key. Rotate collar clockwise to loosen and remove collar.

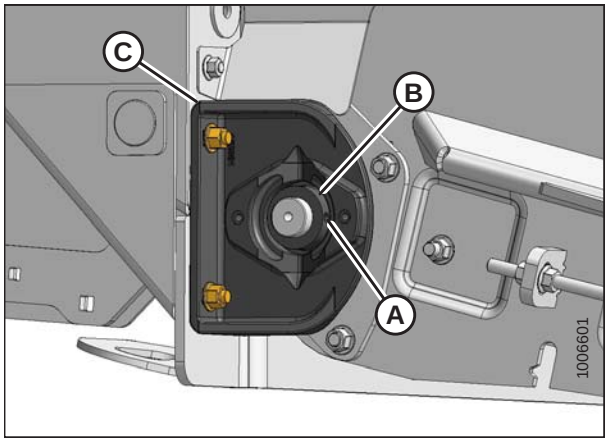

Figure 5.130: Right Side Rear Deck

12. Ensure deck is fully supported, and check that the float spring assembly is loose. You may need to raise the deck slightly to loosen the assembly.
13. Remove the four nuts (A) attaching bearing support (B) to the frame.

    NOTE:

    Ensure that height controller is not damaged when removing bolts.
14. Pull bearing support (B) off roller shaft.

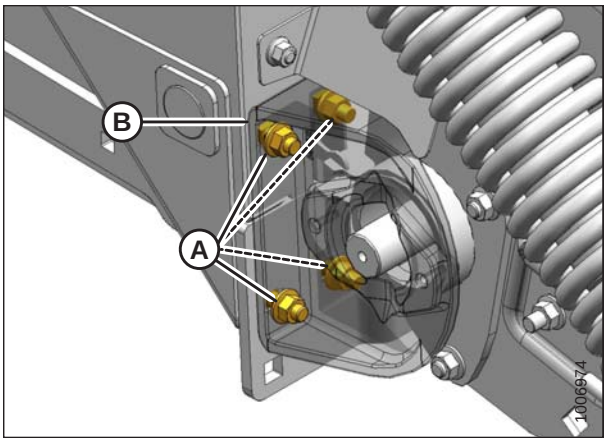

Figure 5.131: Right Side Rear Deck

15. Swivel bearing (A) 90 degrees in support until outer race lines up with slots in bearing support.
16. Push out the bearing (A).

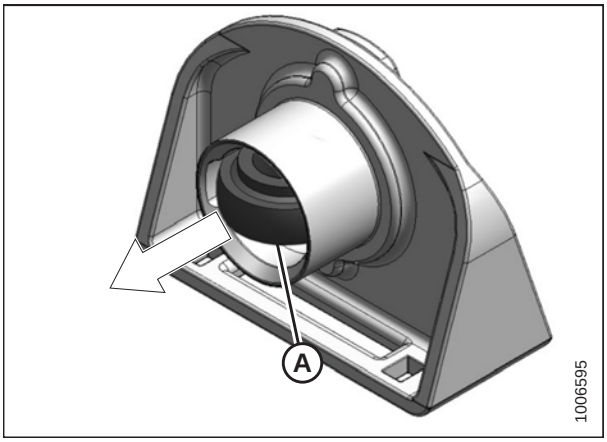

Figure 5.132: Bearing Support

17. Line up new bearing (A) with slots in bearing support, and push bearing into bearing support.
18. Swivel bearing 90 degrees and slide it into groove inside bearing support.

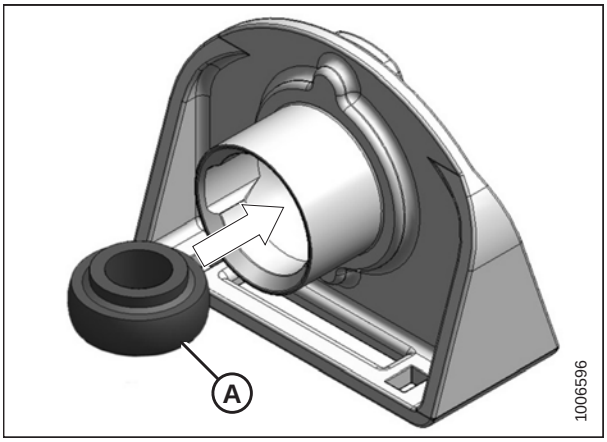

Figure 5.133: Bearing Support

19. Replace bushing (A) if necessary.

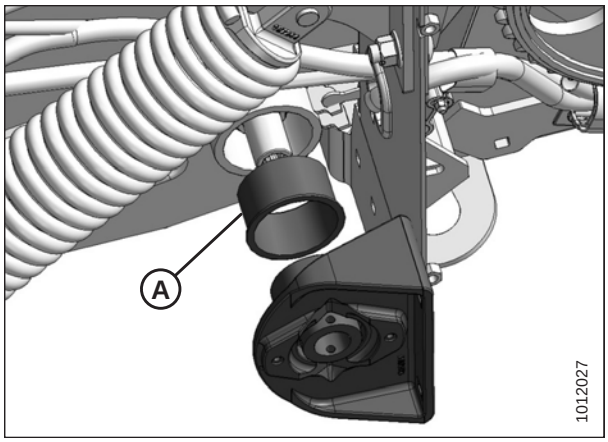

Figure 5.134: Left Side Shown – Right Side Opposite

20. Place bearing support (B) on roller shaft (A).
21. Position the bearing support's base against the frame, and align the mounting holes.
22. Install two M12 x 30 carriage bolts (C) in the upper holes and two M12 x 40 carriage bolts (D) in the lower holes. Secure with lock nuts.

    NOTE:

    Ensure the height controller is not damaged when installing the bolts.

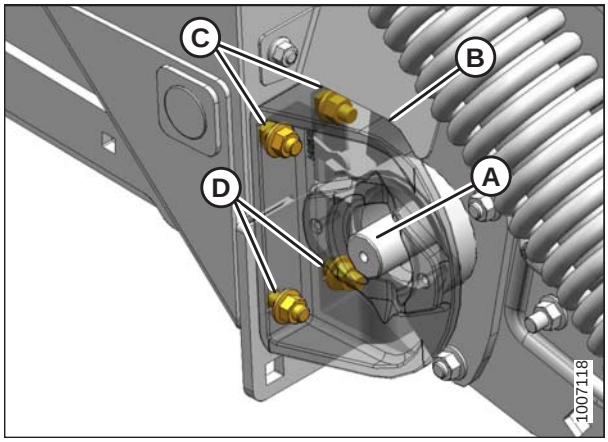

Figure 5.135: Right Side Rear Deck

23. Install lock collar (A) onto the bearing. Lock the collar in the direction of shaft rotation, and tighten setscrew (B).

CAUTION

Never start or move the machine until you are sure all bystanders have cleared the area.

24. Start the combine, and raise the header fully. Shut down the combine, and remove the key from the ignition.
25. Remove the wooden block.
26. Engage the combine header lift cylinder safety props.
27. Align the draper deck rollers. Refer to *Aligning Rear Draper Deck Rollers, page 222* for instructions.
28. Tension the drapers. Refer to *Adjusting Rear Draper Belt Tension, page 88* for instructions.

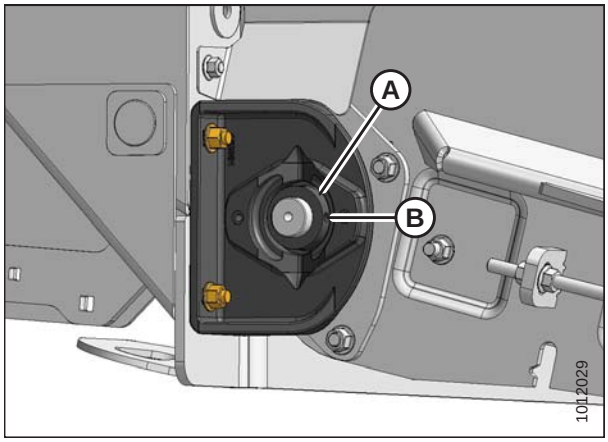

Figure 5.136: Right Side Rear Deck

Replacing Idler Roller Bearing on Left Side of Rear Deck

DANGER

To avoid bodily injury or death from unexpected startup of machine, always stop engine and remove key from ignition before leaving operator's seat for any reason.

1. Lower the hold-down fully.
2. Lower header to the ground until the two float springs are loose.
3. Stop the engine, and remove the key from the ignition.
4. Open left endshield (A). Refer to *3.3.1 Opening Left Endshield, page 29*.
5. Fully release draper belt tension. Refer to *Adjusting Rear Draper Belt Tension, page 88*.

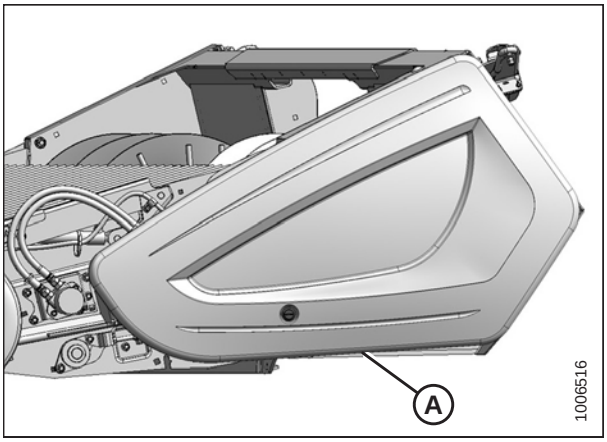

Figure 5.137: Left Endshield

6. Loosen setscrew in lock collar (A) using a 6 mm hex key.
7. Loosen lock collar (A) by rotating collar counterclockwise.
8. Support the roller with a wooden block, and loosen bolts (B) and (C) securing bearing to frame.
9. Remove nuts on bolts (B) and (C).
10. Pull bearing off roller shaft.
11. Place new bearing on roller shaft, and align mounting holes.
12. Install the M12 x 45 carriage bolt (B) in the forward hole and the M12 x 40 carriage bolt (C) in the aft hole. Ensure bolt heads face inboard, secure with lock nuts, but do **NOT** fully tighten.
13. Install lock collar (A) onto bearing. Lock the collar in direction of shaft rotation.

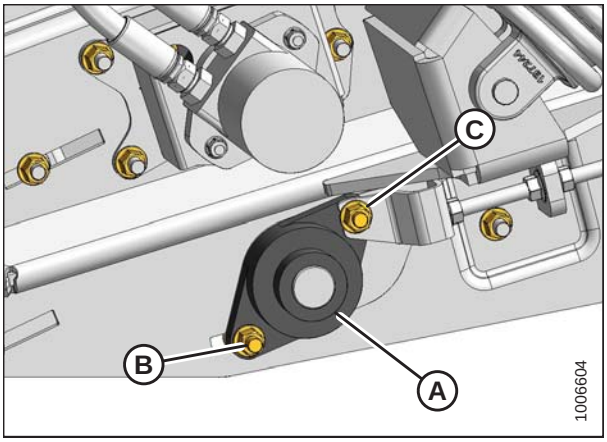

Figure 5.138: Left Side Idler Bearing

14. Tighten the setscrew using a 6 mm hex key.
15. Tension the drapers. Refer to *Adjusting Rear Draper Belt Tension, page 88*.
16. Close the endshield. Refer to *3.3.2 Closing Left Endshield, page 30*.
17. Align the draper deck rollers. Refer to *Aligning Rear Draper Deck Rollers, page 222*.

Replacing Idler Roller Bearing on Right Side of Rear Deck

DANGER

To avoid bodily injury or death from unexpected startup of machine, always stop engine and remove key from ignition before leaving operator's seat for any reason.

1. Lower the hold-down fully.
2. Lower header to the ground until the two float springs are loose.
3. Stop the engine, and remove the key from the ignition.
4. Remove right endshield if necessary. Refer to *3.3.5 Removing Right Endshield, page 34*.
5. Fully release the draper belt tension. Refer to *Adjusting Rear Draper Belt Tension, page 88*.
6. Loosen setscrew in lock collar (A) using a 6 mm hex key.
7. Rotate lock collar (A) clockwise to loosen and remove collar.
8. Support the roller with a wooden block, and loosen bolts (B) and (C) securing bearing to frame.
9. Remove nuts on bolts (B) and (C).
10. Pull bearing off roller shaft.
11. Place new bearing on roller shaft and align mounting holes.
12. Install the M12 x 45 carriage bolt (B) in the forward hole and the M12 x 40 carriage bolt (C) in the aft hole. Ensure bolt heads face inboard, secure with lock nuts, but do **NOT** fully tighten.
13. Install lock collar (A) onto the bearing, and rotate lock collar counterclockwise until tight.
14. Tighten the setscrew using a 6 mm hex key.
15. Align the draper deck rollers. Refer to *Aligning Rear Draper Deck Rollers, page 222*.
16. Tension the drapers. Refer to *Adjusting Rear Draper Belt Tension, page 88*.
17. Replace right endshield if previously removed. Refer to *3.3.6 Installing Right Endshield, page 35*.

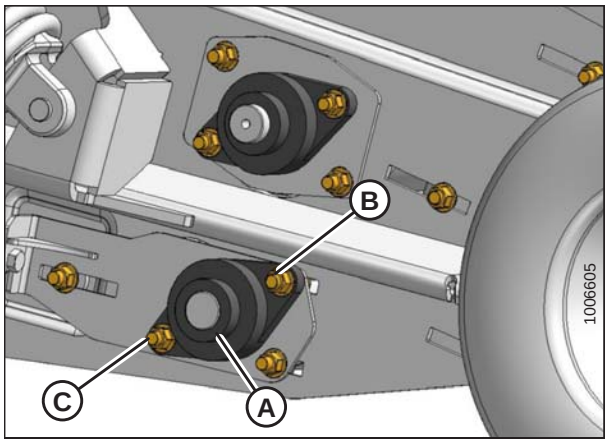

Figure 5.139: Right Side Idler Bearing

Aligning Rear Draper Deck Rollers

Draper roller alignment is necessary for proper draper tracking. Perform this procedure after replacing a roller bearing.

DANGER

To avoid bodily injury or death from unexpected startup of machine, always stop engine and remove key from ignition before leaving operator's seat for any reason.

1. Lower the header to the ground, shut down the combine, and remove the key from the ignition.
2. Open left endshield. Refer to *3.3.1 Opening Left Endshield, page 29*.

3. Remove the front hydraulic motor (A). Refer to *Removing Front Hydraulic Motor, page 175*.
4. Release the draper belt tension. Refer to *Adjusting Front Draper Belt Tension, page 86*.

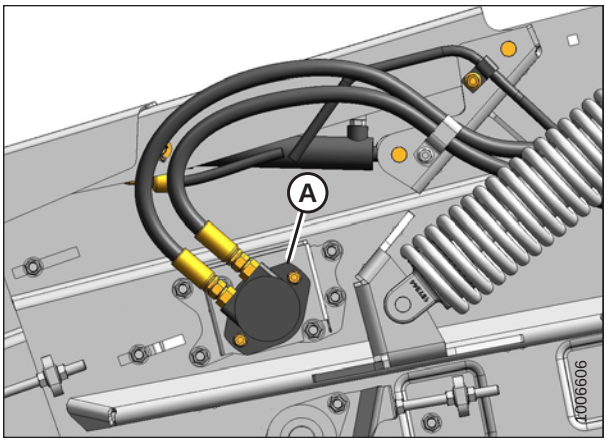

Figure 5.140: Front Hydraulic Motor

5. Loosen the locking collar (A) and the three nuts (B) attaching the bearing flange to the frame on the left side of the header.

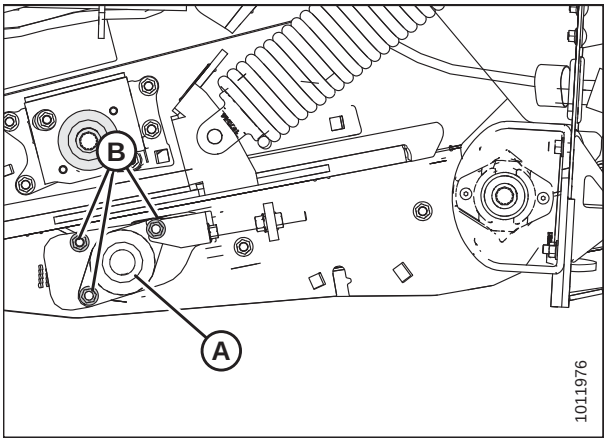

Figure 5.141: Left Side Rear Deck Idler Roller

6. Loosen the locking collar (A) and the three nuts (B) attaching the bearing flange to the frame on the right side of the header.
7. Loosen locking bolt (C).

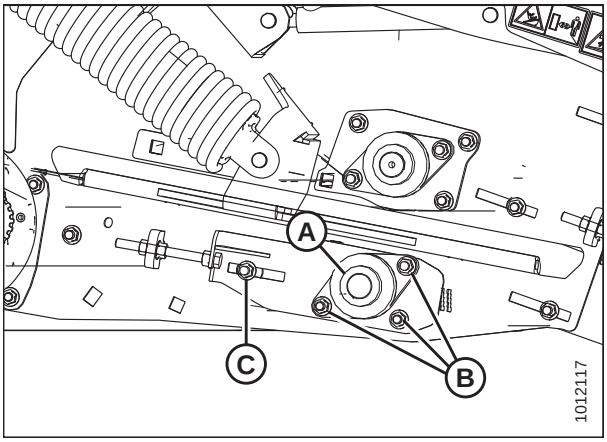

Figure 5.142: Right Side Rear Deck Idler Roller

8. Turn adjuster nut (A) and draw the rear draper deck roller assembly into the header until the leading edge of the bearing support plate (B) lines up with the middle of the single cutout (C) on each side of the header.

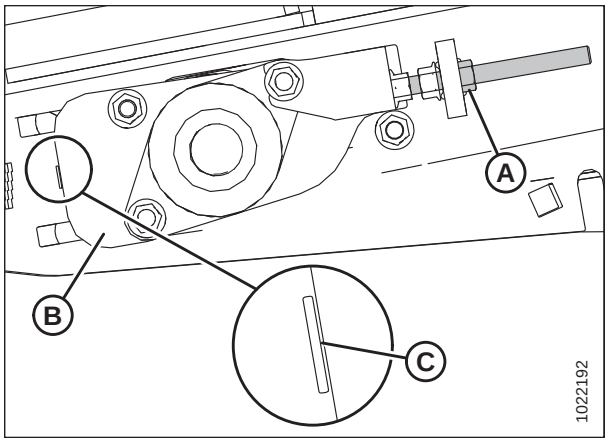

Figure 5.143: Left Side Rear Deck Shown – Right Side Opposite

9. Measure from the center of the rear drive roller to the center of the front driven roller. Set dimension (A) to 490 mm (19-5/16 in.) on each side of the header.

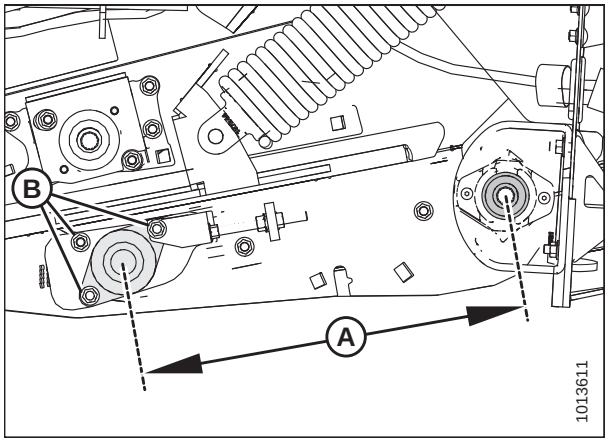

Figure 5.144: Left Side Rear Deck Shown – Right Side Opposite

10. Tighten the locking collar (A) and the three nuts (B) attaching the bearing flange to the frame on the left side of the header.

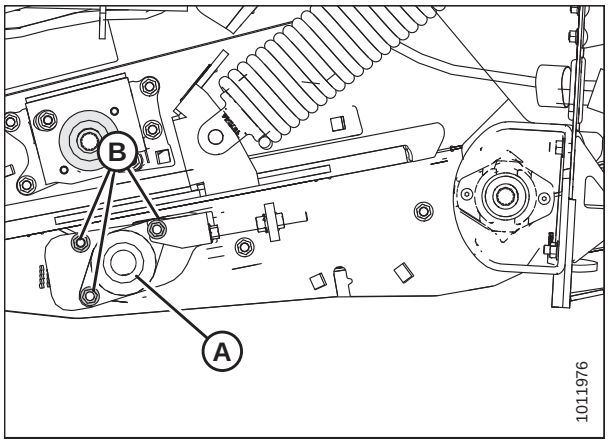

Figure 5.145: Left Side Rear Deck Idler Roller

11. Tighten the locking collar (A) and the three nuts (B) attaching the bearing flange to the frame on the right side of the header.
12. Tighten locking bolt (C).
13. Recheck measurement in Step *9, page 224* to ensure nothing moved while tightening the nuts on each side of the header.
14. Tension the draper belt. Refer to *Adjusting Front Draper Belt Tension, page 86*.
15. Reinstall the front hydraulic motor. Refer to *Installing Front Hydraulic Motor, page 176*.
16. Close the left endshield. Refer to *3.3.2 Closing Left Endshield, page 30*.

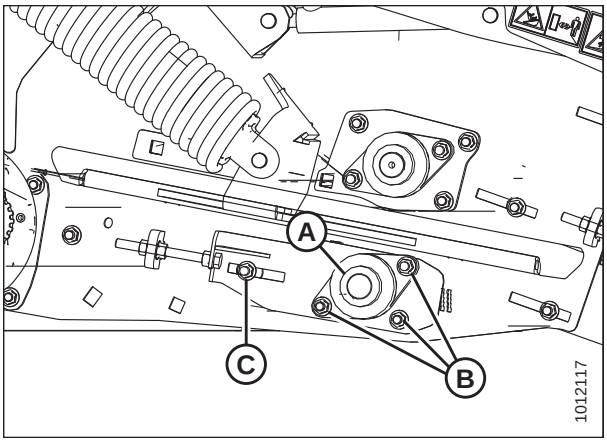

Figure 5.146: Right Side Rear Deck Idler Roller

Replacing Drive Roller Bearing on Left Side of Front Deck

DANGER

To avoid bodily injury or death from unexpected startup of machine, always stop engine and remove key from ignition before leaving operator's seat for any reason.

1. Lower the hold-down fully.
2. Lower the header to the ground until the two float springs are loose.
3. Stop the engine, and remove the key from the ignition.
4. Open the left endshield. Refer to *3.3.1 Opening Left Endshield, page 29* for instructions.
5. Release the draper belt tension fully. Refer to *Adjusting Front Draper Belt Tension, page 86* for instructions.
6. Remove front hydraulic motor (A). Refer to *Removing Front Hydraulic Motor, page 175* for instructions.

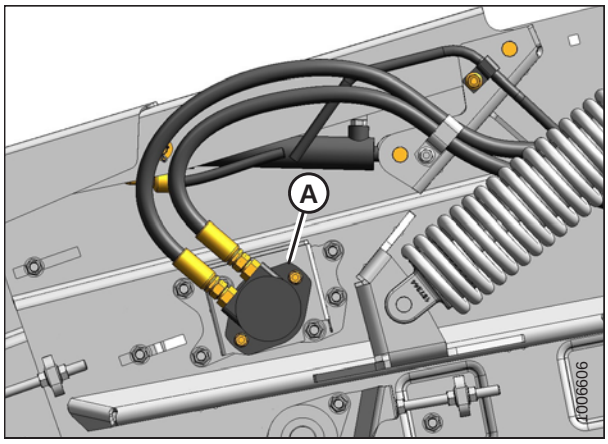

Figure 5.147: Front Hydraulic Motor

7. Turn roller manually until setscrew on lock collar (A) is accessible.
8. Loosen the setscrew using a 6 mm hex key, and turn lock collar (A) counterclockwise to loosen and remove the collar.
9. Support the roller with a wooden block, and use an 18 mm socket to remove four M12 nuts from bolts (B) securing bearing housing (C) to the frame.

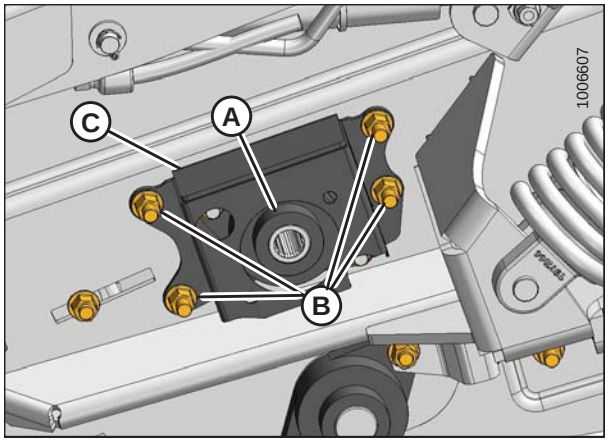

Figure 5.148: Left Side Front Deck

10. Pull the bearing and housing (A) off the roller shaft.

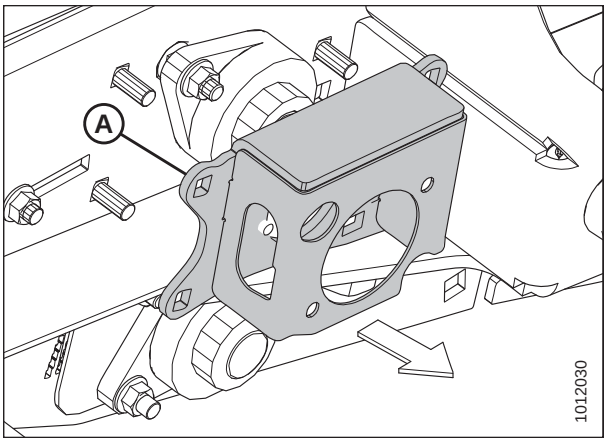

Figure 5.149: Left Side Front Deck

11. Remove two M12 bolts (A) securing bearing (B) to housing (C), and remove bearing (B).
12. Using two M12 x 40 carriage bolts (A) and lock nuts (D), install new bearing (B) into housing (C).

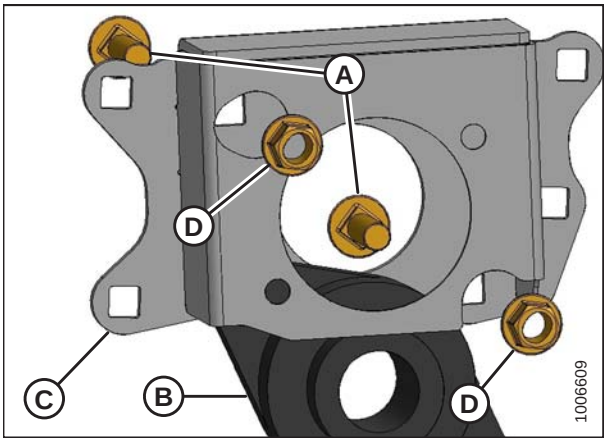

Figure 5.150: Left Side Front Deck

13. Place bearing housing (A) onto roller shaft (B).
14. Secure housing (A) with four M12 x 35 bolts (C) (bolt heads must face inboard) and lock nuts (D). Tighten lock nuts.

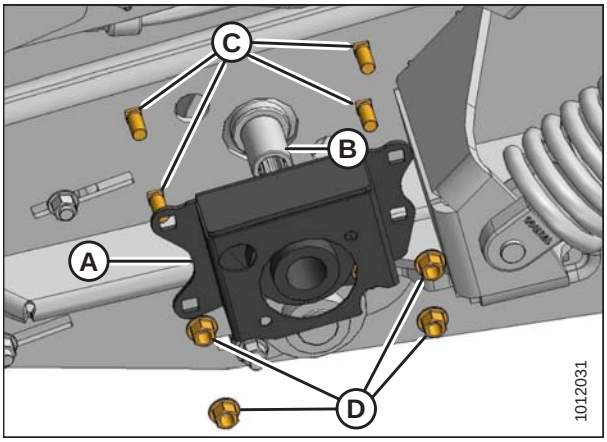

Figure 5.151: Left Side Front Deck

15. Install lock collar (A) onto the roller shaft, and turn it clockwise until tight.
16. Remove the support from under the drive roller.
17. Turn the roller manually until the setscrew in lock collar (A) is accessible.
18. Tighten the setscrew using a 6 mm hex key.
19. Remove the wooden block.

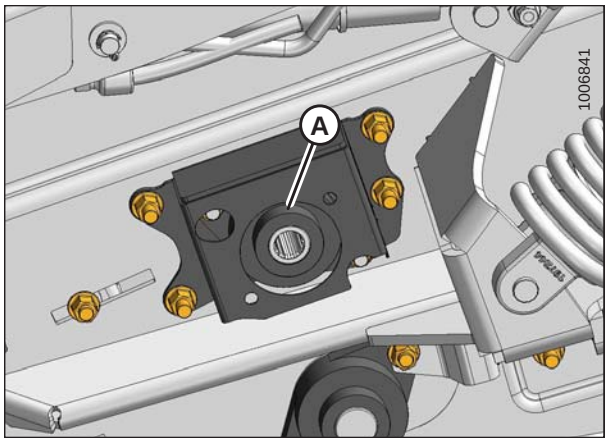

Figure 5.152: Left Side Front Deck

20. Install the front hydraulic motor. Refer to *Installing Front Hydraulic Motor, page 176* for instructions.
21. Align the draper deck rollers. Refer to *Aligning Front Draper Deck Rollers, page 230* for instructions.
22. Tension the drapers. Refer to *Adjusting Front Draper Belt Tension, page 86* for instructions.
23. Close the left endshield. Refer to *3.3.2 Closing Left Endshield, page 30* for instructions.

Replacing Drive Roller Bearing on Right Side of Front Deck

DANGER

To avoid bodily injury or death from unexpected startup of machine, always stop engine and remove key from ignition before leaving operator's seat for any reason.

1. Lower the hold-down fully.
2. Lower header to the ground until the two float springs are loose.
3. Stop the engine, and remove the key from the ignition.
4. Release draper belt tension fully. Refer to *3.12.7 Draper Belt Tension, page 85*.
5. Loosen setscrew in lock collar (A) using a 6 mm hex key.
6. Rotate lock collar (A) clockwise to loosen and remove collar.
7. Support the roller with wooden blocks, and loosen two bolts (B) securing bearing (C) to frame.
8. Remove existing bearing (C) from roller shaft.
9. Place new bearing on roller shaft and align mounting holes.
10. Install M12 x 40 mounting bolts (B) (if previously removed) with heads facing inboard, and secure with lock nuts.
11. Install lock collar (A) onto the bearing (C), and rotate lock collar counterclockwise until tight.

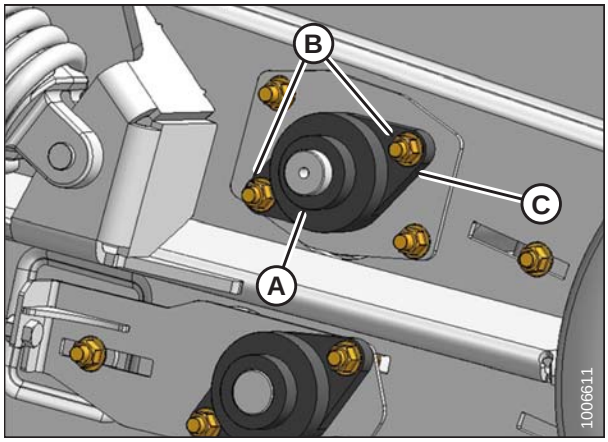

Figure 5.153: Right Side Front Deck

12. Tighten the setscrew using a 6 mm hex key.
13. Remove wooden block.
14. Align the draper deck rollers. Refer to *Aligning Front Draper Deck Rollers, page 230*.

15. Tension the drapers. Refer to *3.12.7 Draper Belt Tension, page 85*.

Replacing Front Deck Idler Roller Bearings

DANGER

To avoid bodily injury or death from unexpected startup of machine, always stop engine and remove key from ignition before leaving operator's seat for any reason.

NOTE:

The following describes the bearing replacement procedure for the left side—the procedure for the right side is identical.

1. Stop the engine, and remove the key from the ignition.
2. Release draper belt tension fully. Refer to *Adjusting Front Draper Belt Tension, page 86*.
3. Loosen the setscrew in lock collar (A) using a 6 mm hex key. Rotate lock collar (A) counterclockwise (clockwise for the right side) to loosen and remove the collar.
4. Support the roller with wooden blocks, and loosen and remove the two nuts on bolts (B). Leave bolts (B) in place between the bearing and the frame.

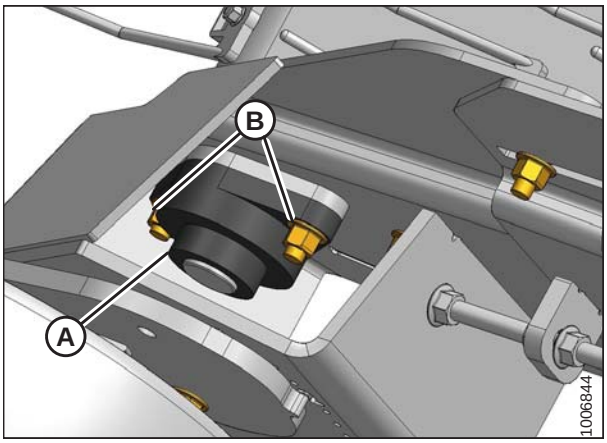

Figure 5.154: Left Side Front Deck – Right Side Opposite

5. Pull bearing assembly (A) off the roller shaft and remove it from the frame.
6. Place new bearing assembly (A) onto the roller shaft and bolts (B).
7. Position the bearing against the frame.

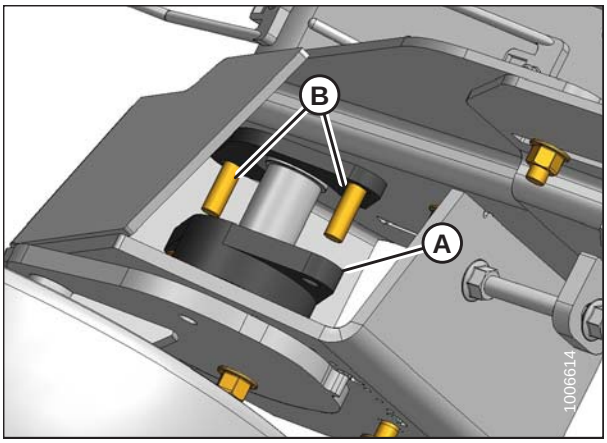

Figure 5.155: Left Side Front Deck – Right Side Opposite

8. Install bolt (A) (if previously removed), and ensure shield (B) is in place.

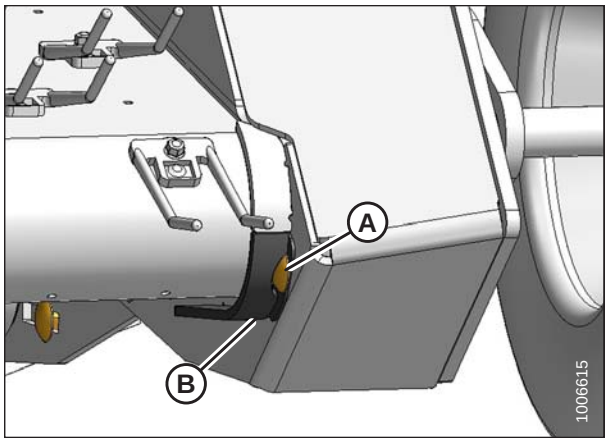

Figure 5.156: Left Side Front Deck – Right Side Opposite

9. Secure bearing (A) with lock nuts (B).
10. Install lock collar (C) onto the bearing, and rotate the lock collar clockwise (counterclockwise for the right side) until tight.
11. Tighten the setscrew using a 6 mm hex key.
12. Remove the wooden blocks.
13. Align the draper deck rollers. Refer to *Aligning Front Draper Deck Rollers, page 230* for instructions.
14. Tension the drapers. Refer to *Adjusting Front Draper Belt Tension, page 86* for instructions.

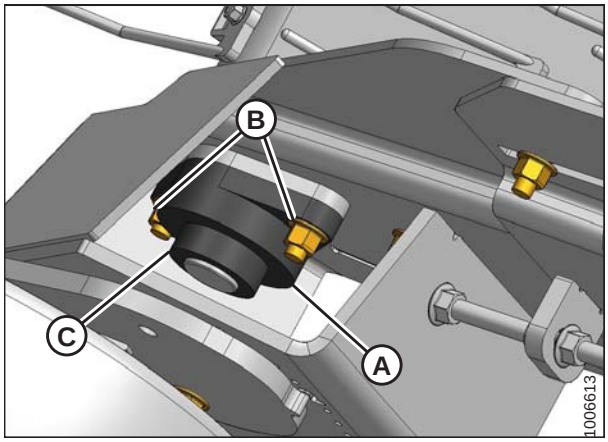

Figure 5.157: Left Side Front Deck – Right Side Opposite

Aligning Front Draper Deck Rollers

Draper roller alignment is necessary for proper draper tracking. Perform this procedure after replacing a roller bearing.

DANGER

To avoid bodily injury or death from unexpected startup of machine, always stop engine and remove key from ignition before leaving operator's seat for any reason.

1. Lower the header to the ground, shut down the combine, and remove the key from the ignition.
2. Open left endshield. Refer to *3.3.1 Opening Left Endshield, page 29*.

3. Remove the front hydraulic motor (A). Refer to *Removing Front Hydraulic Motor, page 175*.
4. Release the draper belt tension. Refer to *Adjusting Front Draper Belt Tension, page 86*.

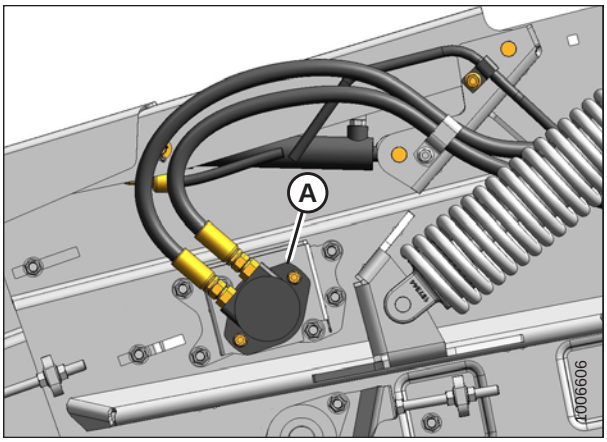

Figure 5.158: Front Hydraulic Motor

5. Loosen the locking collar (A) and the two nuts (B) attaching the bearing flange to the frame on the driven roller on each side of the header.

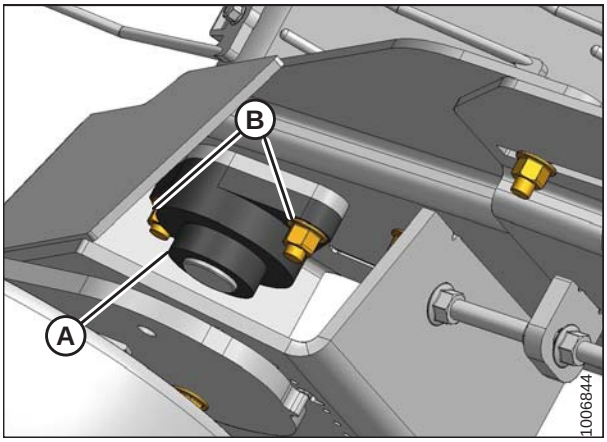

Figure 5.159: Front Deck Idler Roller

6. Loosen the locking collar (A) and the two nuts (B) attaching the bearing flange to the frame.

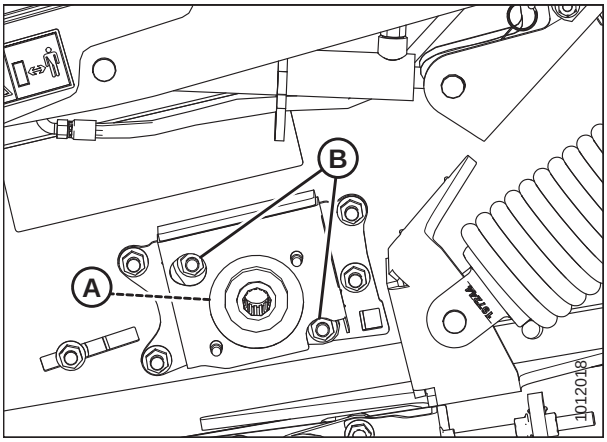

Figure 5.160: Left Side Front Deck Drive Roller

7. Loosen the locking collar (A) and the two nuts (B) attaching the bearing flange to the frame.

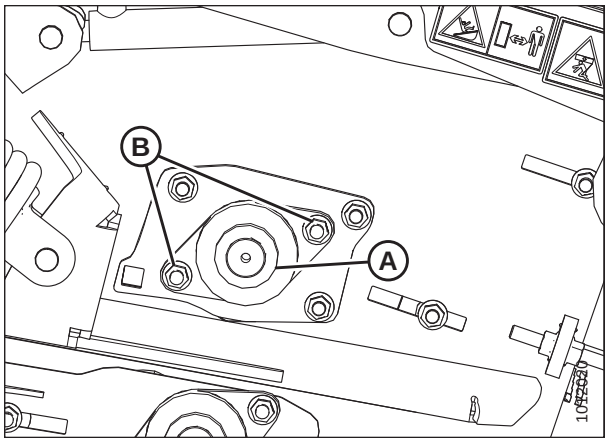

Figure 5.161: Right Side Front Deck Drive Roller

8. Turn adjuster nut (A) and draw the front draper deck roller assembly into the header until the edge of the header frame lines up with the middle of the second slot (C) above the draper tension indicator cutout.
9. Tighten the three clamp bolts (B) on each side of the header.

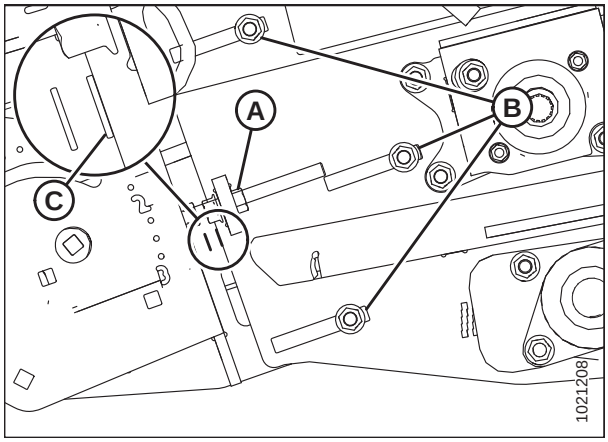

Figure 5.162: Left Side Front Deck – Right Side Opposite

10. Measure from the center of the rear drive roller to the center of the front driven roller. Set dimension (A) to 490 mm (19 5/16 in.) on each side of the header.
11. If unable to achieve 490 mm (19 5/16 in.) for dimension (A) with the frame in the middle of the second slot, adjust the frame as necessary to achieve correct measurement.

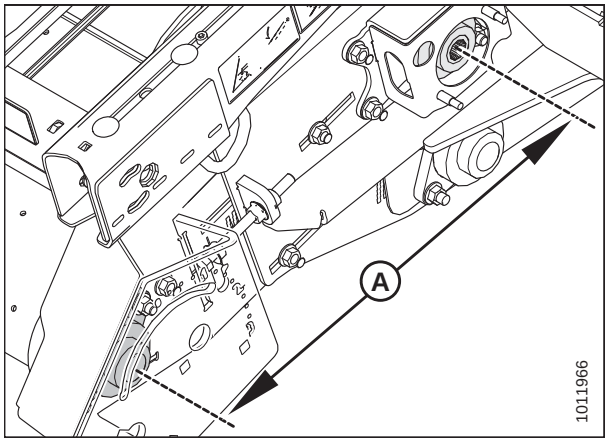

Figure 5.163: Left Side Front Deck – Right Side Opposite

12. Measure the distance (A) between the frame and nearest slot, and make sure the opposite side of frame is equal distance to the same slot.

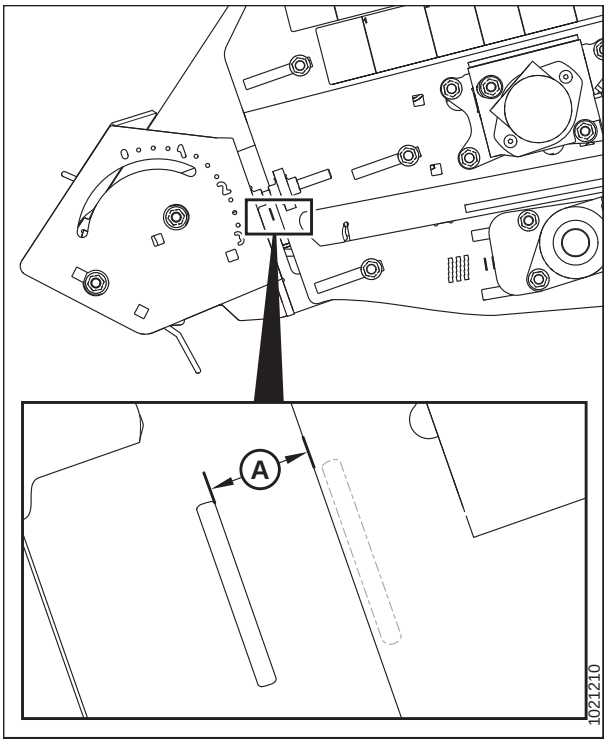

Figure 5.164: Left Side Front Deck – Right Side Opposite

13. Tighten the locking collar (A) and the two nuts (B) attaching the bearing flange to the frame on the driven roller on each side of the header.

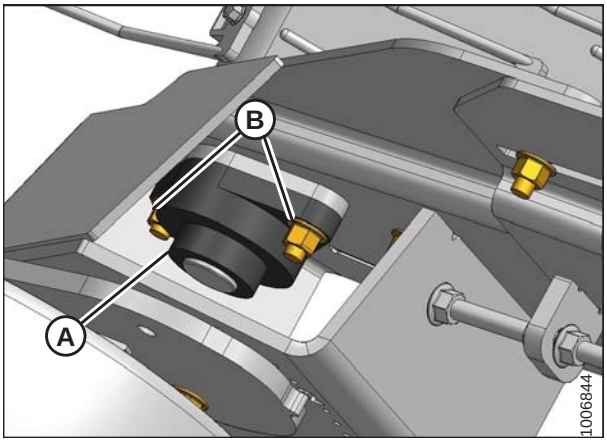

Figure 5.165: Front Deck Idler Roller

14. Tighten the locking collar (A) and the two nuts (B) attaching the bearing flange to the frame.

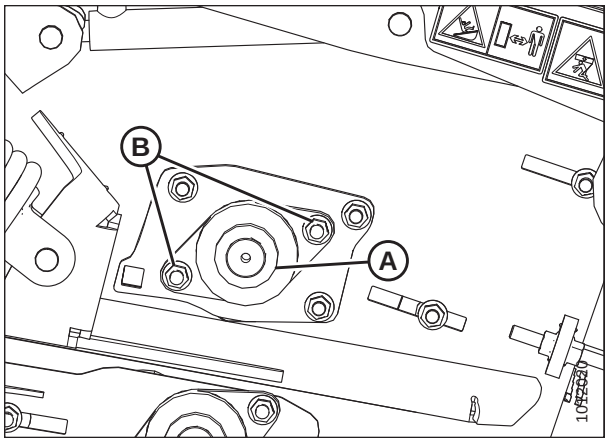

Figure 5.166: Right Side Front Deck Drive Roller

15. Tighten the locking collar (A) and the two nuts (B) attaching the bearing flange to the frame.
16. Recheck measurement in Step *10, page 232* to ensure nothing moved while tightening the nuts on each side of the header.
17. Tension the draper belt. Refer to *Adjusting Front Draper Belt Tension, page 86*.
18. Reinstall the front hydraulic motor. Refer to *Installing Front Hydraulic Motor, page 176*.
19. Close the left endshield. Refer to *3.3.2 Closing Left Endshield, page 30*.

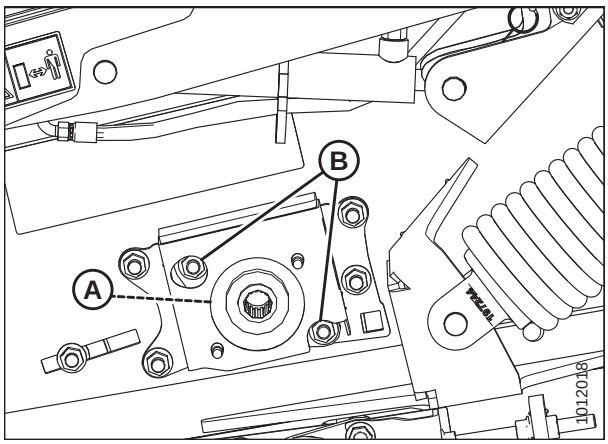

Figure 5.167: Left Side Front Deck Drive Roller

5.8 Header Spring Float Assembly

5.8.1 Removing Header Spring Float Assembly

DANGER

To avoid bodily injury or death from unexpected startup of machine, always stop engine and remove key from ignition before leaving operator's seat for any reason.

1. Attach the header to the combine feeder house and ensure it is latched securely. It is not necessary to hook up the driveline or hydraulics. Refer to the relevant combine attaching procedure:
   - *Attaching to Case IH Combine, page 42*
   - *Attaching to John Deere 60, 70, S, or T Series Combine, page 48*
   - *Attaching to New Holland CR/CX Series Combine, page 56*
   - *Attaching to Versatile Combine, page 61*
2. Lower combine feeder house so the front draper deck is rotated upwards to full floated-up position. Header frame will be close to the ground and coil spring will be fully collapsed.

   NOTE:

   Spring tension is factory-set to the second hole from the bottom on the float anchor.
3. Shut down the combine and remove the key from the ignition.
4. Open the left endshield (A). Refer to *3.3.1 Opening Left Endshield, page 29*.

   NOTE:

   The right side spring float assembly can be removed or adjusted without removing the right endshield. For improved accessibility, however, remove four M12 carriage bolts and hex flange nuts from the endshield support (not shown), and remove the right endshield.

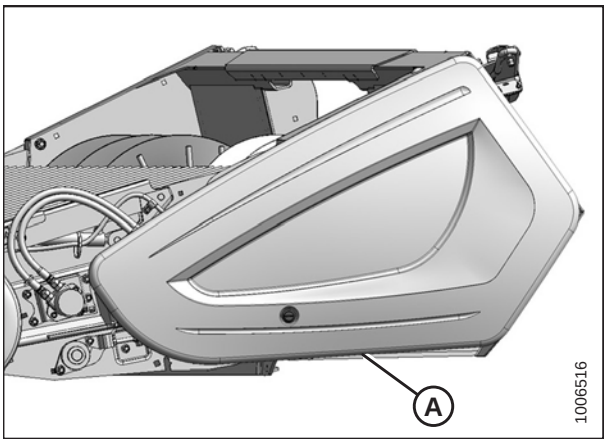

Figure 5.168: Left Endshield

5. Ensure all spring tension is released from the spring float assembly (A), remove cotter pin (B), clevis pin (C), and three flat washers (D).

   NOTE:

   When spring tension is fully released, spring coils should be fully collapsed and the spring float assembly should rock from side to side when moved by hand. If pressure on the clevis pin persists, slightly raise or lower the header.

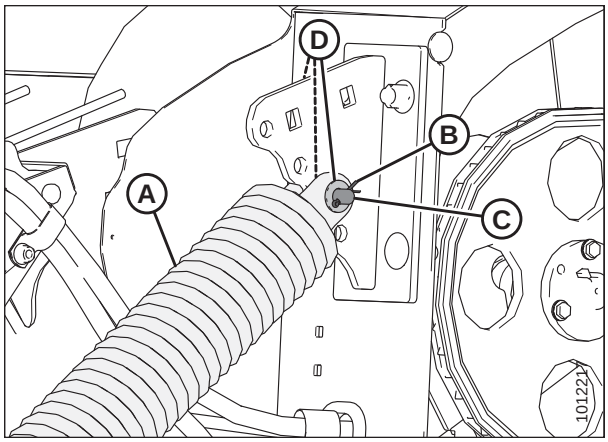

Figure 5.169: Left Side Spring Float Assembly Shown – Right Side Opposite

   IMPORTANT:

   Note the spring float assembly position on the anchor, and ensure the left and right assemblies are set to the same anchor hole position during installation or draper deck damage could result.

7. Remove cotter pin (B), clevis pin (C), and three flat washers (D) from spring float assembly (A) at front anchor.

8. Remove spring float assembly (A).

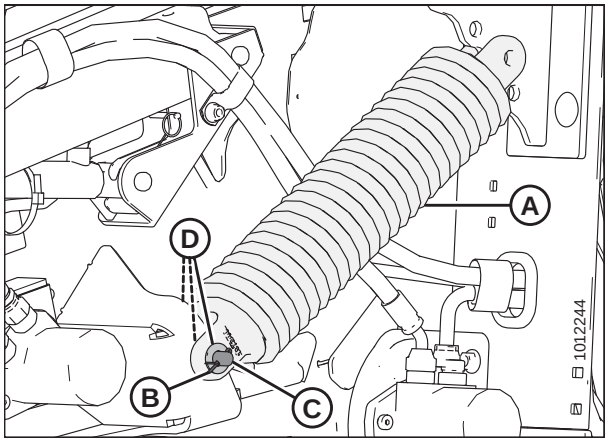

Figure 5.170: Left Side Front Anchor Shown – Right Side Opposite

5.8.2 Installing Header Spring Float Assembly

NOTE:

Spring tension is factory-set to the second hole from the bottom on the anchor.

1. Position rod end (D) of spring float assembly (A) onto anchor (B), and position opposite end of assembly onto front anchor (C).

   IMPORTANT:

   The word **ROD** is stamped onto the casting to indicate which side of the spring float assembly (A) contains the rod end (D) of the shock. Ensure the rod end (D) of the shock is installed onto anchor (B) as shown.

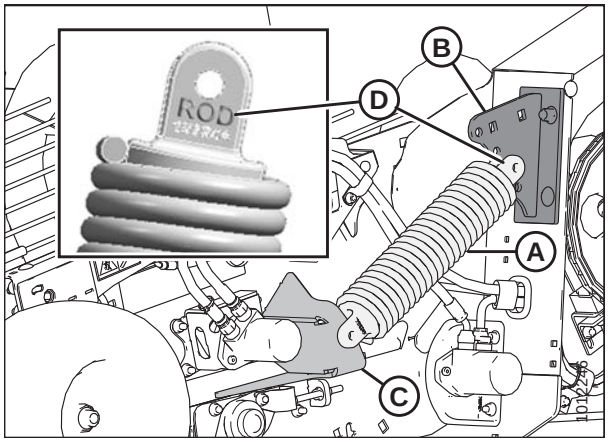

Figure 5.171: Left Side Anchors Shown – Right Side Opposite

2. Insert clevis pin (A) from the inboard side through spring float assembly (B), three flat washers (C), and front anchor (D) as shown. Secure with cotter pin (E).

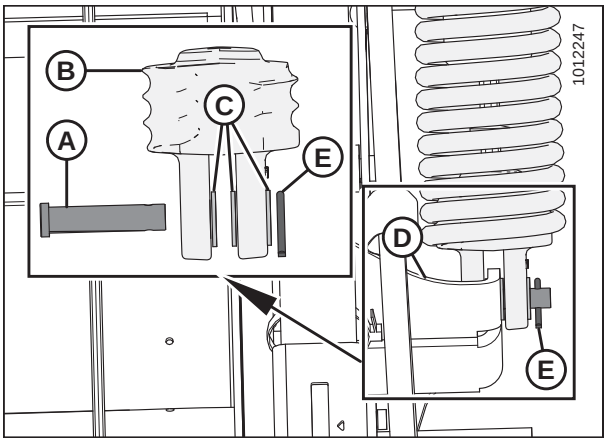

Figure 5.172: Left Side Spring Float Assembly Shown – Right Side Opposite

3. Align spring float assembly (A) with float anchor hole (B). Refer to *3.12.4 Adjusting Header Float, page 81* to change the header float setting.

   IMPORTANT:

   The left and right spring float assemblies must be set to the same anchor hole position or draper deck damage could result.

   NOTE:

   If the spring float assembly (A) hole does not align with anchor hole (B), raise or lower header as necessary.

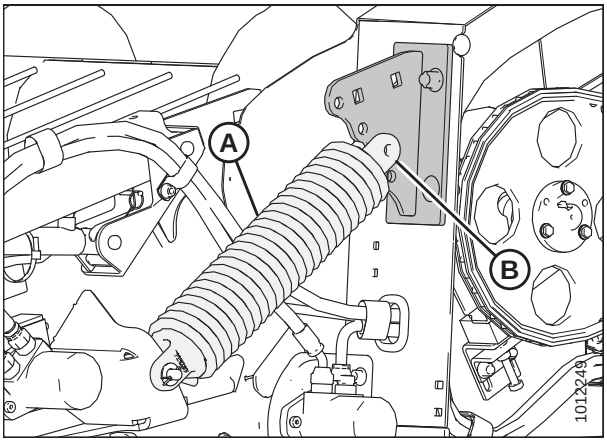

Figure 5.173: Left Side Anchor Shown – Right Side Opposite

4. Insert clevis pin (A) from the inboard side through the rod end of spring float assembly (B), three flat washers (C), and anchor (D) as shown. Secure with cotter pin (E).
5. Repeat procedure for opposite side of header, ensuring that left and right spring float assemblies are set to the same anchor hole position on header.

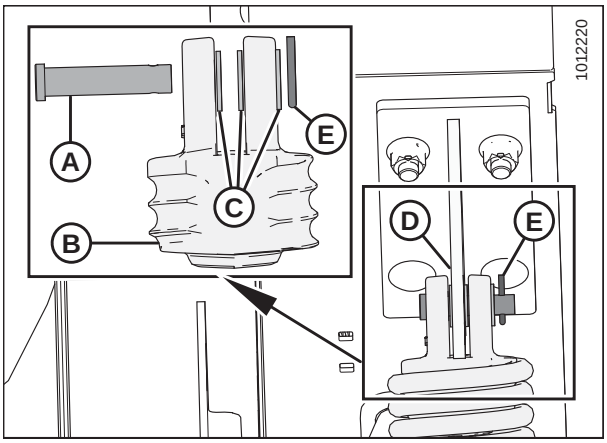

Figure 5.174: Left Side Spring Float Assembly Shown – Right Side Opposite

6. Close the left endshield (A). Refer to *3.3.2 Closing Left Endshield, page 30*, and replace right endshield if previously removed.

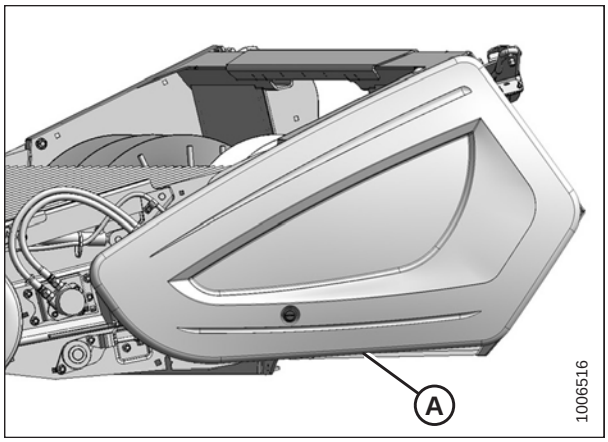

Figure 5.175: Left Endshield

5.9 Hold-Downs

Hold-downs help crop to transition smoothly from the drapers to the auger and can be adjusted for crop conditions.

5.9.1 Replacing Fiberglass Rods

DANGER

To avoid bodily injury or death from unexpected startup of machine, always stop engine and remove key from ignition before leaving operator's seat for any reason.

1. Lower hold-down, and lower header to the ground.
2. Shut down the combine and remove the key from the ignition.
3. Loosen flange nuts (B) securing hold-down bar to hold-down arms on outer rod (A), and loosen nut (C) next to rod.

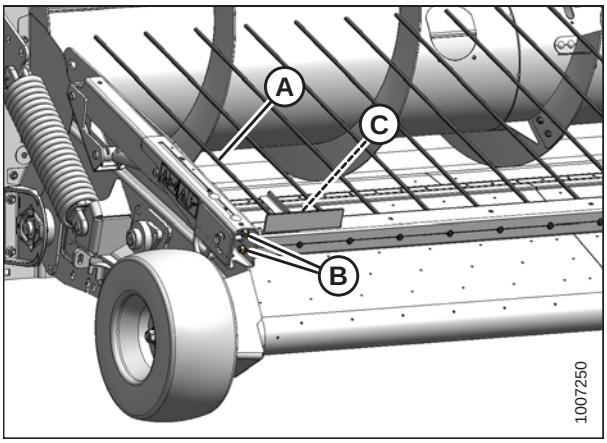

Figure 5.176: Outer Fiberglass Rod

4. Slide out existing rod, and replace with new rod. Ensure new rod (A) extends 10 mm (3/8 in.) (B) beyond plastic sleeve (C).

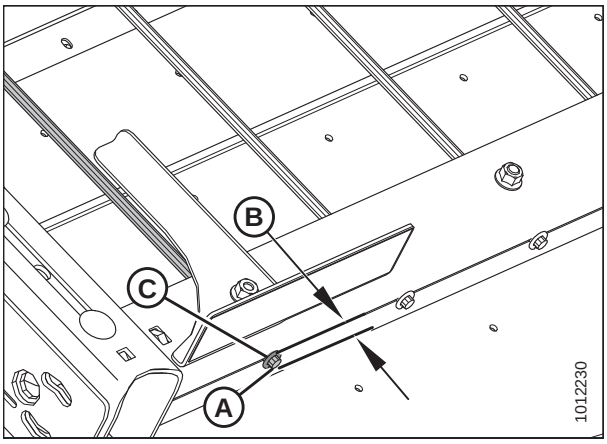

Figure 5.177: Outer Fiberglass Rod

5. Tighten nuts (A) and (B).

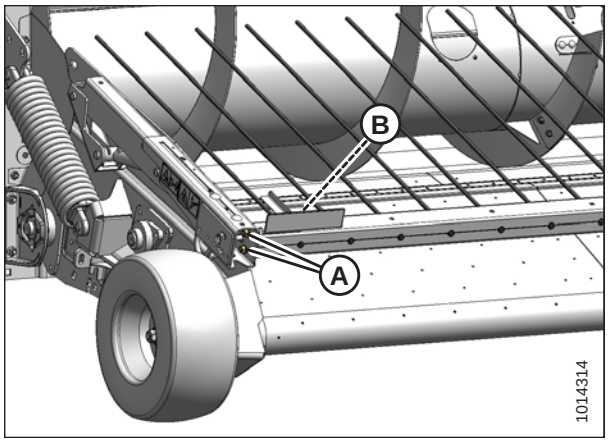

Figure 5.178: Outer Fiberglass Rod

6. Loosen adjacent nuts (B) on remaining rods (A), and repeat Step *4, page 239* for each rod.
7. Tighten nuts (B).

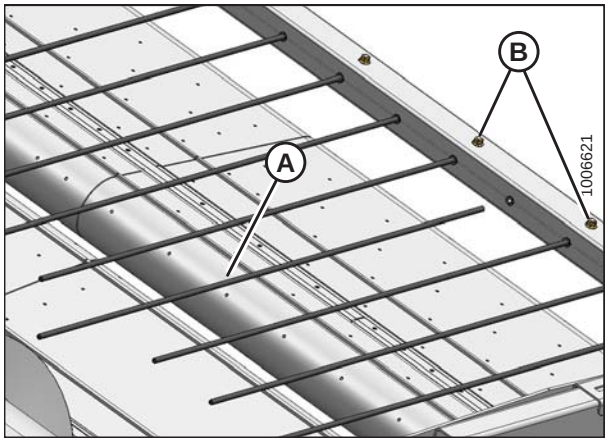

Figure 5.179: Fiberglass Rods

5.9.2 Replacing Master Hold-Down Cylinder

The hold-down is raised and lowered by a master and slave single-acting hydraulic cylinder. The master cylinder is located at the left end of the hold-down.

Cylinder operation is adversely affected by air in the system and cylinder seal failure. Remove, repair, or replace cylinders if either of these issues arise.

Removing Master Cylinder

DANGER

To avoid bodily injury or death from unexpected startup of machine, always stop engine and remove key from ignition before leaving operator's seat for any reason.

1. Lower the header and hold-down completely. Continue pressing the hold-down lower switch for 5–10 seconds to remove any pressure in the system.
2. Stop the engine and remove the key from the ignition.
3. Open the left endshield. Refer to *3.3.1 Opening Left Endshield, page 29*.

4. Remove cotter pins and washers from clevis pins (B) and (D).
5. Raise hold-down (C) by hand, and use a prop device to support hold-down and take the weight off the cylinder (A).
6. Remove clevis pin (D) at barrel end of cylinder. Cylinder will drop free from hold-down arm.

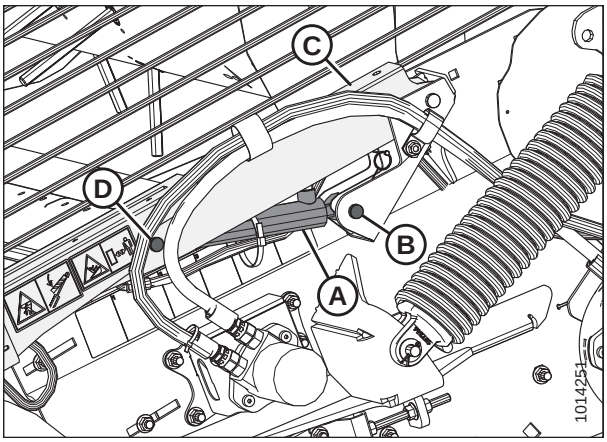

Figure 5.180: Left Side Master Cylinder

7. Insert a block of wood (A) between the hold-down arm (B) and the pick-up (C) to keep the hold-down elevated and clear of the work area.

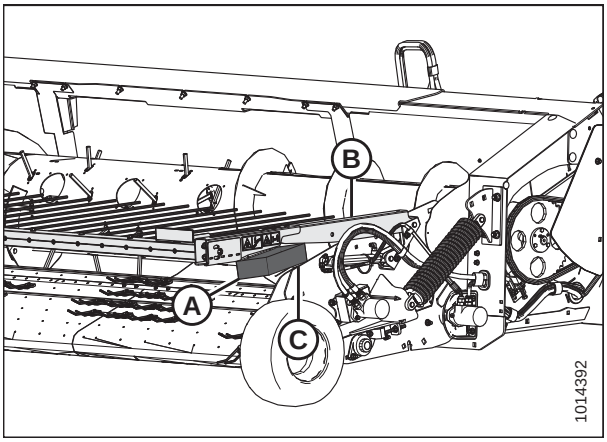

Figure 5.181: Block Location

8. Remove clevis pin (A) at rod end of cylinder, and remove cylinder and safety prop (B).

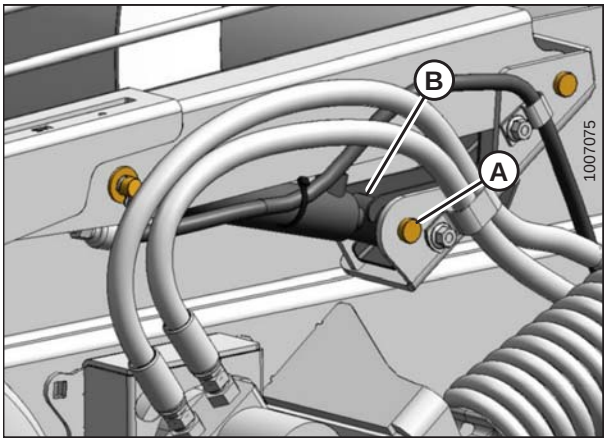

Figure 5.182: Left Side Master Cylinder

9. Cut cable ties on hoses (A) and (B), and disconnect hoses from cylinder. Install caps onto hose ends or wrap with plastic.

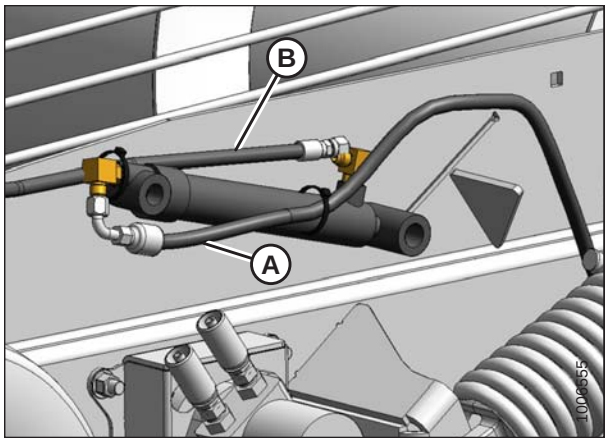

Figure 5.183: Left Side Master Cylinder

Installing Master Cylinder

1. Remove the two 90 degree elbows (A) and (B) from previously removed master cylinder. Refer to *Removing Master Cylinder, page 240*.
2. Remove plugs from new master cylinder ports.
3. Install elbows (A) and (B) onto new master cylinder as shown. Align elbow (B) as shown (C). Tighten jam nuts on elbows.

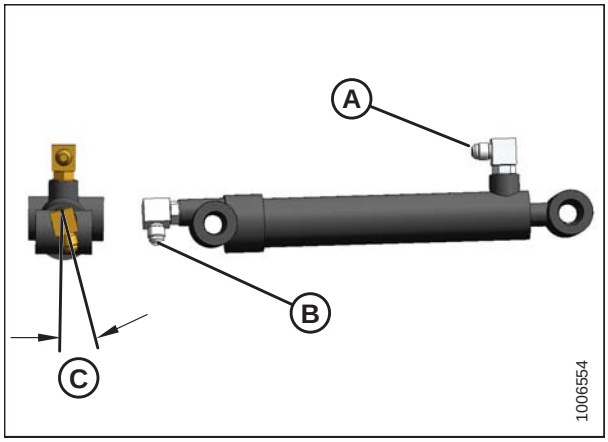

Figure 5.184: Left Side Master Cylinder

4. Connect hose (A) from slave cylinder to elbow (C) at rod (aft) end, and hose (B) from header to elbow (D) at barrel (forward) end. Tighten fittings ensuring hose (B) is routed parallel to the cylinder.

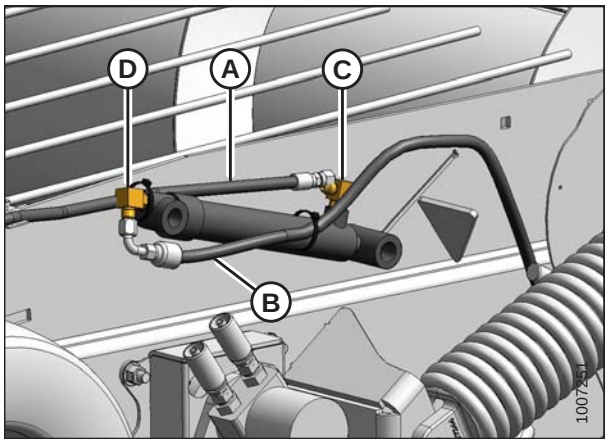

Figure 5.185: Left Side Master Cylinder

5. Position rod end of cylinder (A) and safety prop into cylinder support bracket, and secure with the shorter clevis pin (B). Ensure clevis pin head faces outboard.
6. Secure clevis pin (B) with washer and cotter pin (not shown).
7. Lift hold-down arm (C) until clevis pin (D) can be installed through lift arm and barrel end of cylinder. Ensure clevis pin head faces outboard.
8. Secure clevis pin (D) with washer and cotter pin (not shown).
9. Secure hoses with cable ties (not shown).
10. Remove previously inserted block of wood.

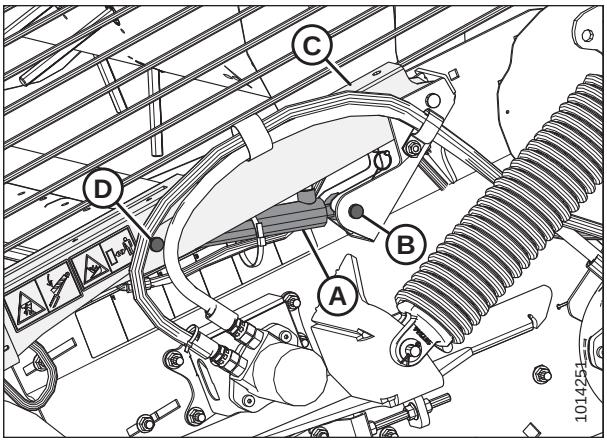

Figure 5.186: Left Side Master Cylinder

11. Bleed cylinders and lines. Refer to *5.9.4 Bleeding Cylinders and Lines, page 246*.
12. Close the left endshield. Refer to *3.3.2 Closing Left Endshield, page 30*.

5.9.3 Replacing Slave Hold-Down Cylinder

The hold-down is raised and lowered by a master and slave single-acting hydraulic cylinder. The slave cylinder is located at the right end of the hold-down and is connected to the master cylinder by a hose that passes through the hold-down beam.

Cylinder operation is adversely affected by air in the system and cylinder seal failure. Remove, repair, or replace cylinders if either of these issues arise.

Removing Slave Cylinder

1. Lower the header and hold-down completely. Continue pressing the hold-down lower switch for 5–10 seconds to remove any pressure in the system.

DANGER

To avoid bodily injury or death from unexpected startup of machine, always stop engine and remove key from ignition before leaving operator's seat for any reason.

2. Stop the engine and remove the key from the ignition.
3. Remove cotter pins and washers from clevis pins (B) and (D).
4. Raise hold-down (C) by hand, use a prop device to support hold-down and take the weight off the cylinder (A), and remove clevis pin (D) at barrel end of cylinder. Cylinder will drop free from hold-down arm.

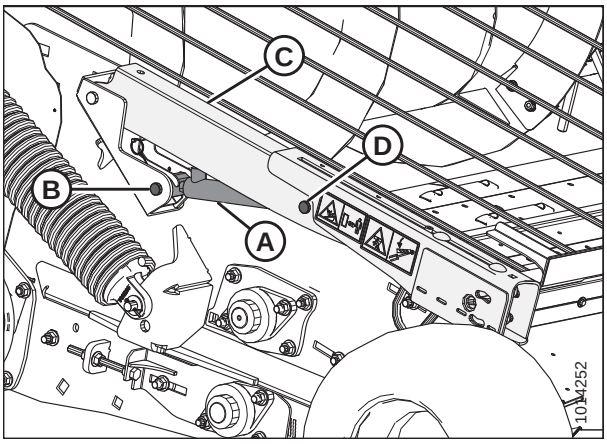

Figure 5.187: Right Side Slave Cylinder

5. Use a lifting device to lift and support the hold-down arm (A) to allow removal of the cylinder.

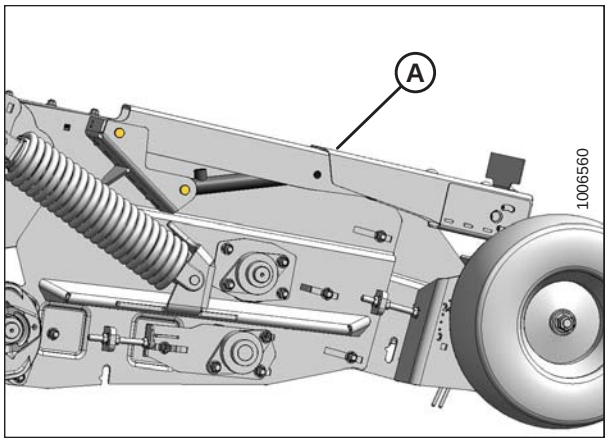

Figure 5.188: Right Side Hold-Down Arm

6. Remove clevis pin (A) at rod end of cylinder, and remove cylinder and safety prop (B).

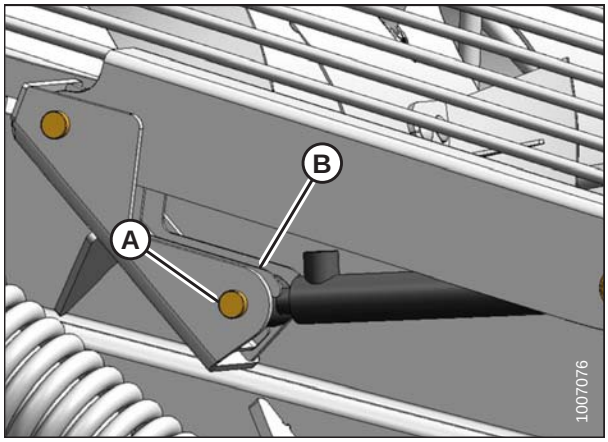

Figure 5.189: Right Side Slave Cylinder

7. Disconnect hydraulic hose (A) from cylinder. Install cap onto hose end, or wrap with plastic.

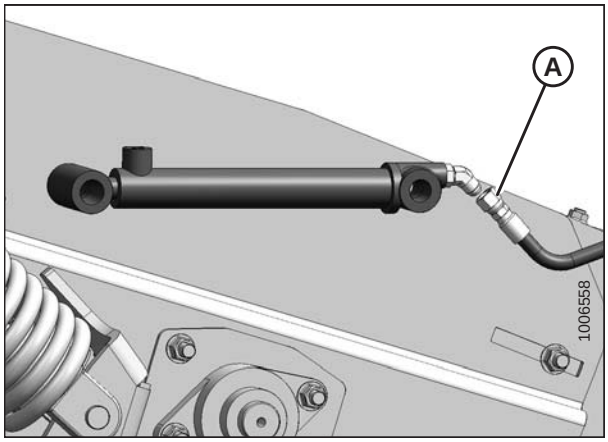

Figure 5.190: Right Side Slave Cylinder

Installing Slave Cylinder

1. Remove the 45 degree elbow (A) from the previously removed slave cylinder. Refer to *Removing Slave Cylinder, page 243*.
2. Remove plug from new slave cylinder port.
3. Install elbow (A) onto new slave cylinder as shown. Ensure fitting is in line with cylinder, and tighten jam nut on elbow.

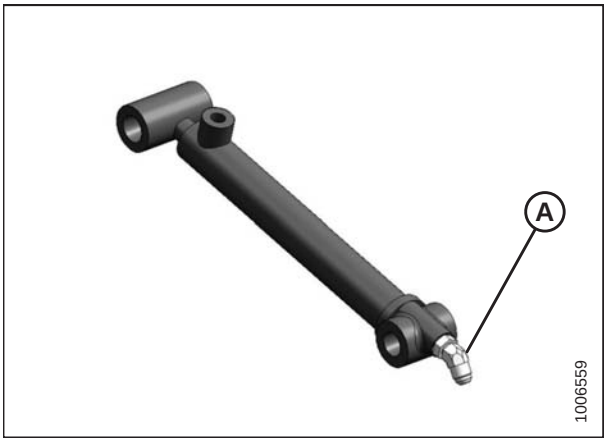

Figure 5.191: Right Side Slave Cylinder

4. Connect hose (A) from master cylinder to elbow (B), and tighten fitting.

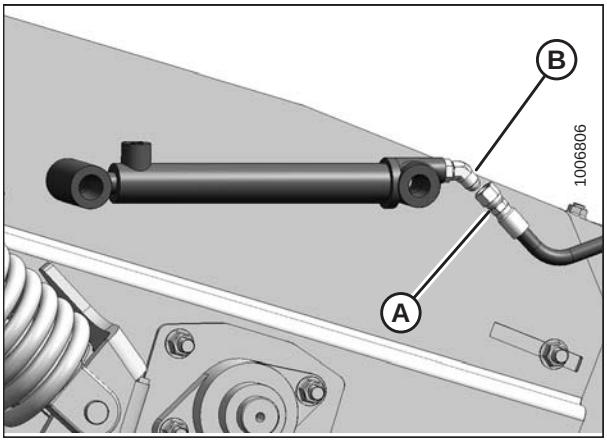

Figure 5.192: Right Side Slave Cylinder

5. Position rod end of cylinder (A) and safety prop into cylinder support bracket, and secure with the shorter clevis pin (B). Ensure clevis pin head faces outboard.
6. Secure clevis pin (B) with washer and cotter pin (not shown).
7. Lift hold-down arm (C) until clevis pin (D) can be installed through lift arm and barrel end of cylinder. Ensure clevis pin head faces outboard.
8. Secure clevis pin (D) with washer and cotter pin (not shown).
9. Remove block of wood inserted in *Removing Slave Cylinder, page 243*.
10. Bleed cylinders and lines. Refer to *5.9.4 Bleeding Cylinders and Lines, page 246*.

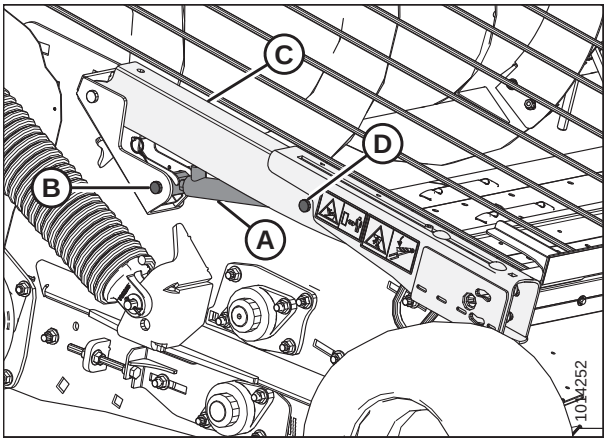

Figure 5.193: Right Side Slave Cylinder

5.9.4 Bleeding Cylinders and Lines

Air must be removed from the system for the hydraulics to perform properly. The following procedure explains how to bleed hydraulic cylinders and lines. Bleed the hydraulics after initial installation, if the unit has been idle for a significant period of time, or if the hydraulic system requires adjustment.

CAUTION

High-pressure hydraulic oil can cause serious injuries such as burns, cuts, and tissue damage. Always take precautions when working with hydraulic oil. Wear safety goggles, gloves, and thick clothing. Seek immediate medical attention if cut or burned.

1. Raise the hold-down fully using the combine reel lift control.
2. Engage the hold-down safety props (A) on both sides of header. Ensure safety props are fully rotated over center so they remain engaged.
3. Lower the hold-down onto the safety props (A) to relieve the hydraulic pressure in the lines.

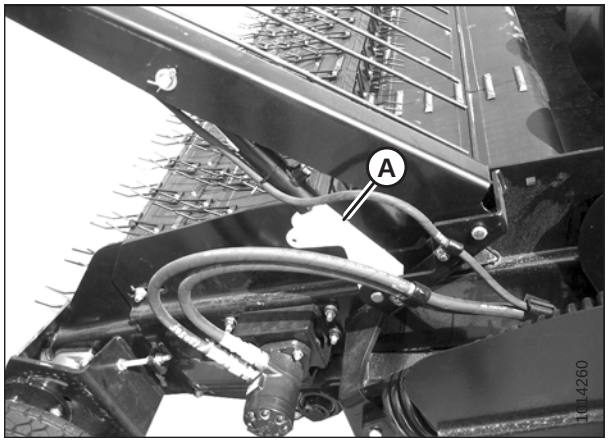

Figure 5.194: Hold-Down Safety Prop

4. Remove the bleed port plug (not shown) completely.

   IMPORTANT:

   Remove the bleed port plug completely before applying hydraulic pressure. If the bleed port plug is only loosened, the hydraulic oil pressure will damage the plug's O-ring.
5. Hold a plastic container up to the bleed port to collect hydraulic oil.
6. Activate the combine reel lift control to apply hydraulic pressure to the system until the air bubbles disappear and a steady stream of oil flows from the bleed port. Release the lift control to relieve hydraulic pressure.
7. Replace the bleed port plug and torque to 0.8 Nm (7 lbf·in).

Figure 5.195: Bleeding Cylinder

8. Raise the hold-down fully, and disengage the hold-down safety props.
9. Cycle the cylinder 5–10 times by fully extending and fully retracting the cylinder. Ensure the hold-down is level when raising and lowering, and the slave and master cylinders are in sync. Repeat the bleeding process if necessary.
10. Lower the hold-down.

5.9.5 Hydraulic Hoses and Lines

Check hydraulic hoses and lines daily for signs of leaks. Replace any leaking or damaged hoses.

For hold-down systems, refer to the following:

- *Removing Master Cylinder Hose, page 248*
- *Installing Master Cylinder Hose, page 250*

For draper drive systems, refer to the following:

- *Removing Hydraulic Motor Hoses, page 179*
- *Installing Hydraulic Motor Hoses, page 184*

WARNING

- **Avoid high-pressure fluids. Escaping fluid can penetrate the skin causing serious injury.**
- **Relieve pressure before disconnecting hydraulic lines.**
- **Tighten all connections before applying pressure. Keep hands and body away from pin holes and nozzles which eject fluids under high pressure.**
- **If any fluid is injected into the skin, it must be surgically removed within a few hours by a doctor familiar with this type of injury or gangrene may result.**

Figure 5.196: Hydraulic Pressure Hazard

WARNING

Use a piece of cardboard or paper to search for leaks.

IMPORTANT:

Keep hydraulic coupler tips and connectors clean. Allowing dirt, dust, water, or foreign material to enter the system is the major cause of hydraulic system damage. Do **NOT** attempt to service hydraulic systems in the field. Precision fits require a perfectly clean connection during overhaul.

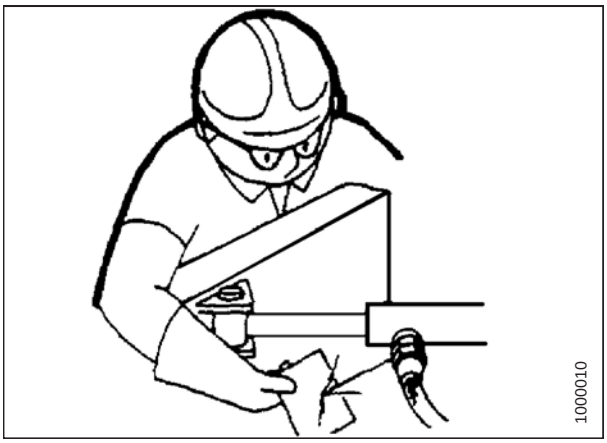

Figure 5.197: Testing for Hydraulic Leaks

Removing Master Cylinder Hose

DANGER

To avoid bodily injury or death from unexpected startup of machine, always stop engine and remove key from ignition before leaving operator's seat for any reason.

1. Lower the header to the ground.
2. Lower the hold-down completely to release all the hydraulic pressure in the system.
3. Stop the engine and remove the key from the ignition.
4. Open the left endshield (A). Refer to *3.3.1 Opening Left Endshield, page 29*.

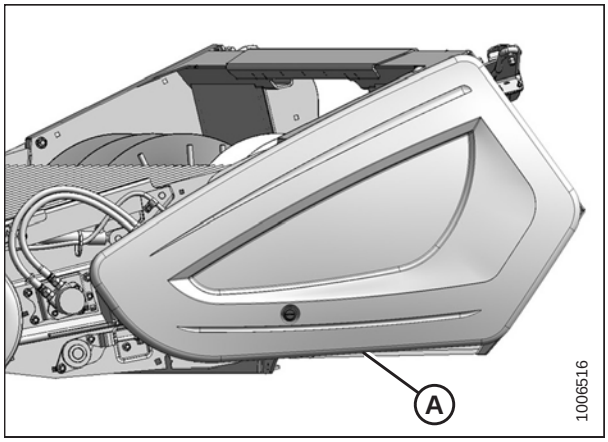

Figure 5.198: Left Endshield

5. Disconnect hydraulic hose (A) from master lift cylinder (B). Install caps onto hose ends or wrap with plastic.

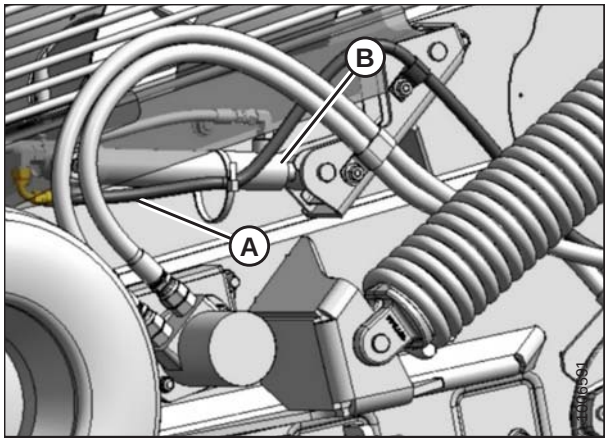

Figure 5.199: Left Side Master Cylinder

6. Loosen or remove hose clips (A), and undo cinch straps (B).
7. Pull hose through grommet (C).

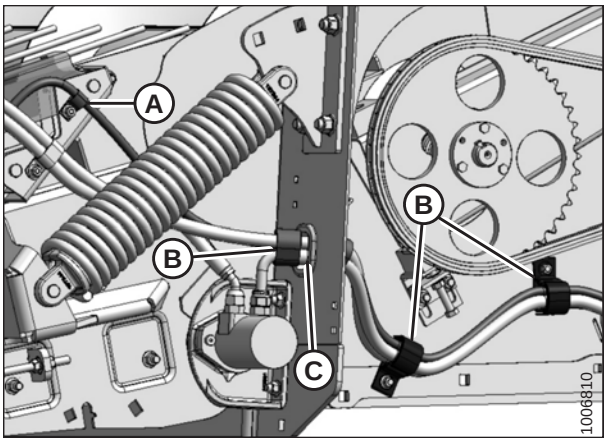

Figure 5.200: Left Side of Header

8. Disconnect hydraulic hose (A) from multicoupler.

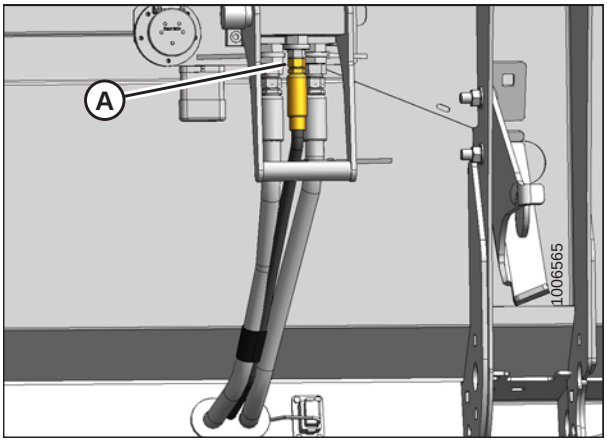

Figure 5.201: Left Backsheet

9. Loosen three bolts (A) and remove cover (B).
10. Pull hose out of cover (B).

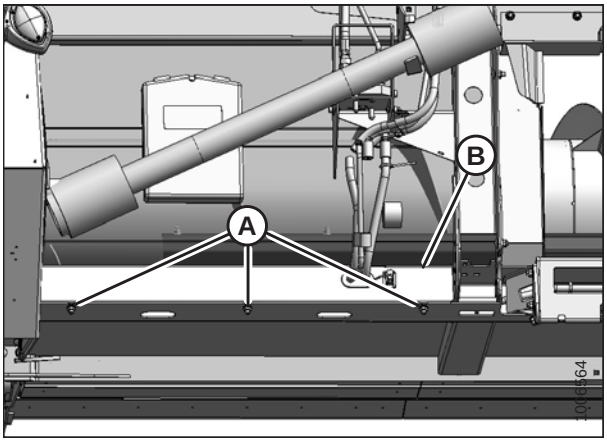

Figure 5.202: Bottom Beam Cover

11. Remove grommet (A) to remove hydraulic hose (if necessary).

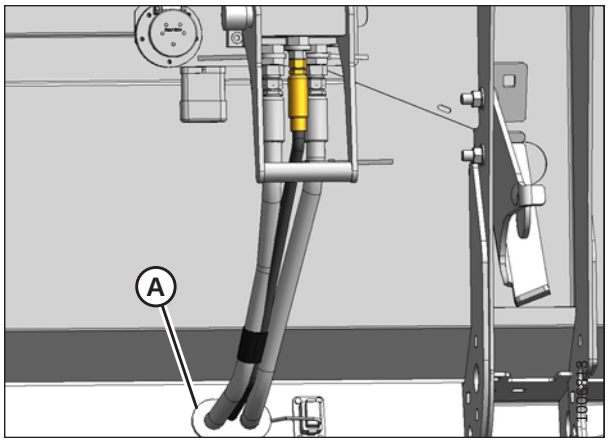

Figure 5.203: Left Backsheet

12. Pull hose through grommet (A) in endsheet.

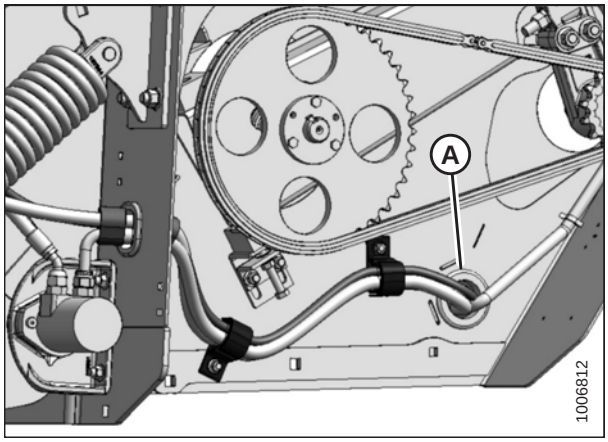

Figure 5.204: Left Endsheet

Installing Master Cylinder Hose

1. Feed hose (A) through grommet (B) in endsheet.
2. Feed hose through clips (C) and grommet (D) to master cylinder.

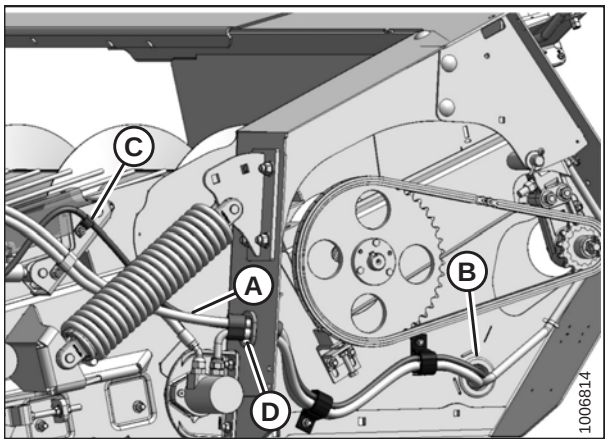

Figure 5.205: Left Endsheet

3. Feed hose (A) through grommet (B).
4. Connect hose (A) to multicoupler.

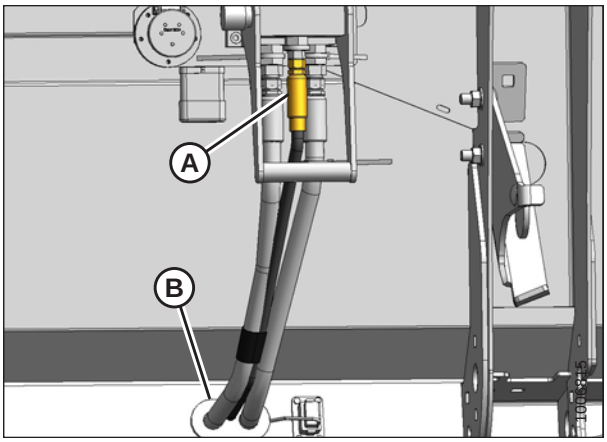

Figure 5.206: Left Backsheet

5. Connect hose (A) to master cylinder (B), and secure hose to master cylinder with cable tie (C).

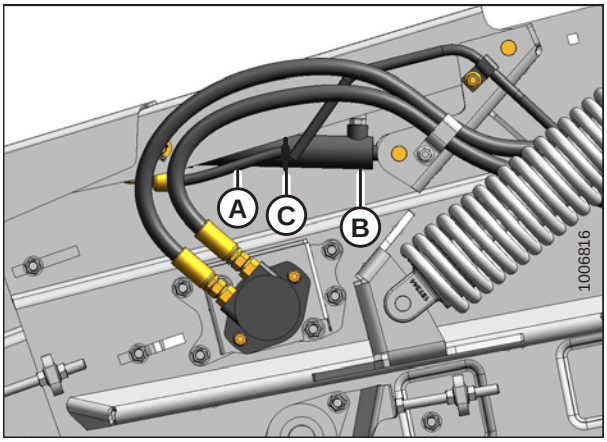

Figure 5.207: Left Side of Header

6. Secure hose with clips (A) and cinch straps (B).

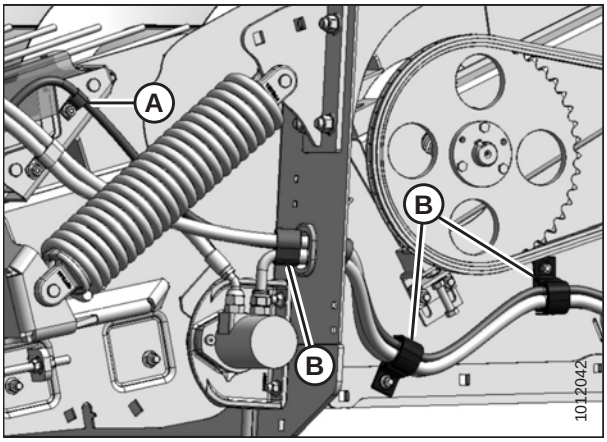

Figure 5.208: Left Side of Header

7. Install bottom beam cover (B) and tighten bolts (A).
8. Close endshield. Refer to *3.3.2 Closing Left Endshield, page 30*.
9. Bleed cylinders and lines. Refer to *5.9.4 Bleeding Cylinders and Lines, page 246*.

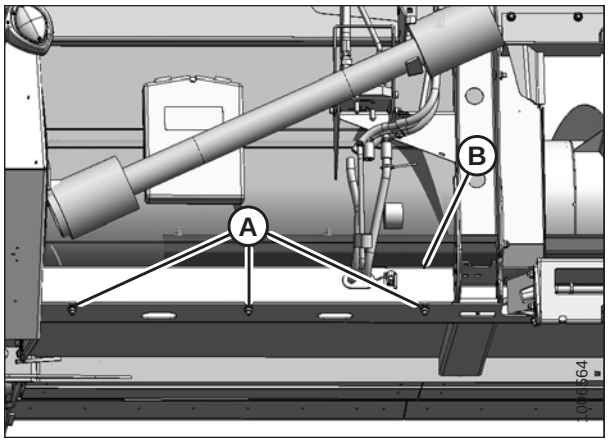

Figure 5.209: Bottom Beam Cover

5.10 Draper Speed Sensor

The draper speed sensor is mounted to a support on the right side of the header. It reads the speed of the driven roller on the rear deck. This section does **NOT** apply to Case IH and New Holland combines. For Case IH and New Holland combines, refer to your combine operator's manual for further information.

5.10.1 Checking Draper Speed Sensor Position

The draper speed sensor position is factory-set, but it may require adjustment if problems occur with the draper speed system or when replacing sensor components. Check the draper speed sensor position prior to making any adjustments.

DANGER

To avoid bodily injury or death from unexpected startup of machine, always stop engine and remove key from ignition before leaving operator's seat for any reason.

1. Stop the engine, and remove the key from the ignition.
2. Check clearance (A) between the speed sensor and the disc. The recommended clearance is 3 mm (1/8 in.). If clearance requires adjustment, refer to *5.10.2 Adjusting Draper Speed Sensor, page 254*.

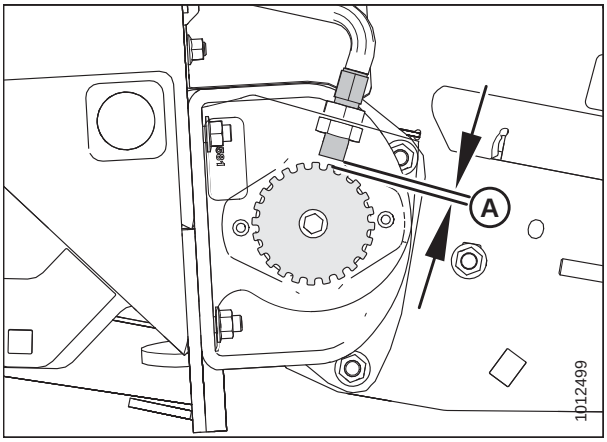

Figure 5.210: Disc Clearance

3. Check vertical alignment (A) of sensor (B) and sensor disc (C). If required, adjust support (D) inboard or outboard to adjust vertical alignment.

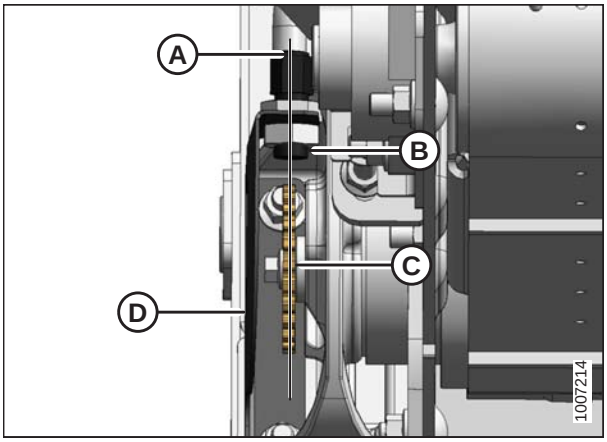

Figure 5.211: Sensor and Disc Alignment

5.10.2 Adjusting Draper Speed Sensor

The draper speed sensor position is factory-set, but it may require adjustment if problems occur with the draper speed system or when replacing sensor components. Check the draper speed sensor position prior to making any adjustments. Refer to *5.10.1 Checking Draper Speed Sensor Position, page 253*.

DANGER

To avoid bodily injury or death from unexpected startup of machine, always stop engine and remove key from ignition before leaving operator's seat for any reason.

1. Lower the header to the ground, and lower the hold-down completely.
2. Stop the engine, and remove the key from the ignition.
3. Hold sensor (B) with a wrench and loosen jam nut (C).
4. Turn jam nuts (C) and (A) to reach the required sensor-to-disc clearance.
5. Tighten jam nuts (C) and (A).

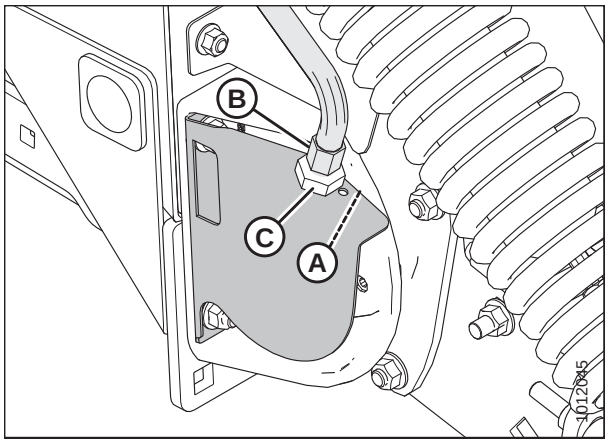

Figure 5.212: Draper Speed Sensor

5.10.3 Replacing Draper Speed Sensor

The speed sensor may require replacement if it is malfunctioning or if service is being performed to adjacent components.

DANGER

To avoid bodily injury or death from unexpected startup of machine, always stop engine and remove key from ignition before leaving operator's seat for any reason.

1. Lower the header to the ground, and lower the hold-down completely.
2. Stop the engine, and remove the key from the ignition.
3. Remove lower jam nut (A), and pull sensor (B) from support (C).
4. Disconnect sensor (B) from the harness, and remove top jam nut (D).
5. Attach new sensor (B) to the harness, and install top jam nut (D) onto the sensor.
6. Position sensor (B) in support (C), and secure with lower jam nut (A).
7. Adjust the clearance between the sensor and the sensor disc. Refer to *5.10.2 Adjusting Draper Speed Sensor, page 254* for instructions.

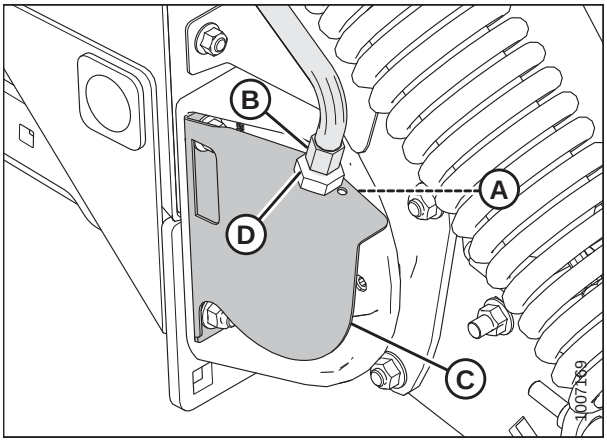

Figure 5.213: Draper Speed Sensor

5.11 Wheels and Tires

There are two wheels and tires on the PW8 Combine Pick-Up Header, one on each side of the header.

DANGER

- **Never install a tube in a cracked wheel rim.**
- **Never weld a wheel rim.**
- **Make sure all the air is removed from the tire before removing the tire from the rim.**
- **Never use force on an inflated or partially inflated tire. Make sure the tire is correctly seated before inflating to operating pressure.**
- **Do NOT remove, install, or repair a tire on a rim unless you have the proper equipment and experience to perform the job. Take the tire and rim to a qualified tire repair shop.**
- **If the tire is overinflated or is incorrectly positioned on the rim, the tire bead can loosen on one side causing air to escape at high speed and with great force. An air leak of this nature can propel the tire in any direction and endanger anyone in the area.**
- **Do NOT exceed the maximum inflation pressure indicated on the tire label.**
- **Replace the tire if it is worn or damaged beyond repair.**

5.11.1 Removing Wheel

DANGER

To avoid bodily injury or death from unexpected startup of machine, always stop engine and remove key from ignition before leaving operator's seat for any reason.

1. Lower header onto blocks with wheels raised slightly above the ground.
2. Stop the engine, and remove the key from the ignition.
3. Remove wheel nut (B) using a 30 mm socket wrench.
4. Pull wheel (A) off spindle.

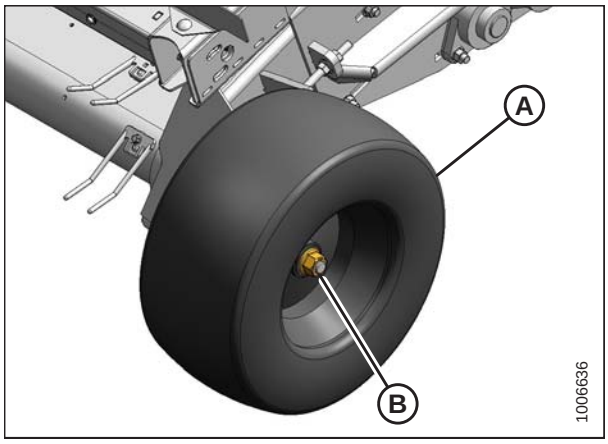

Figure 5.214: Left Side Wheel

5. If required, remove spacer (A) from spindle.

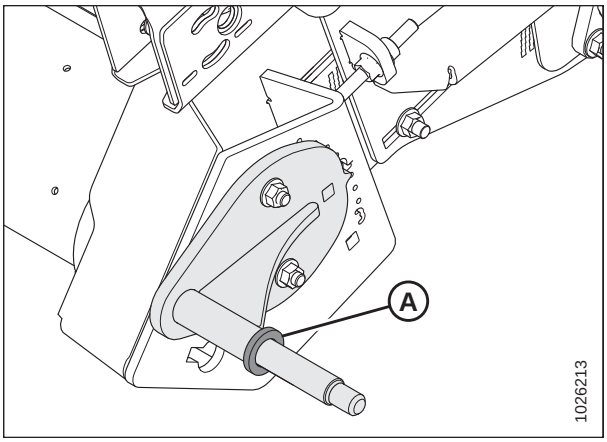

Figure 5.215: Left Side Spindle

5.11.2 Installing Wheel

NOTE:

Left side shown. Repeat steps on opposite side.

1. Ensure spacer (A) is installed onto spindle.

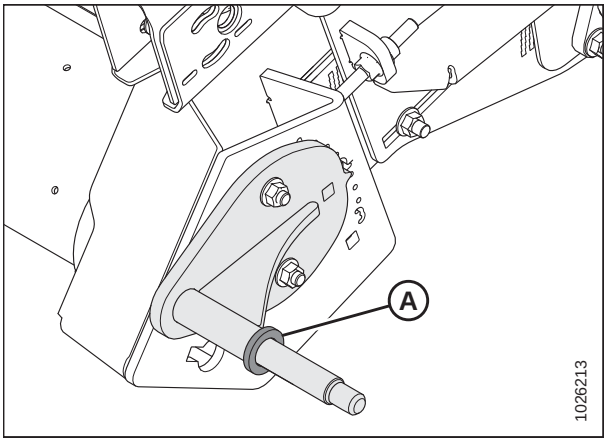

Figure 5.216: Left Side Spindle

2. Install wheel (A) onto spindle and secure with wheel nut (B). Torque to 136 Nm (100 lbf·ft).

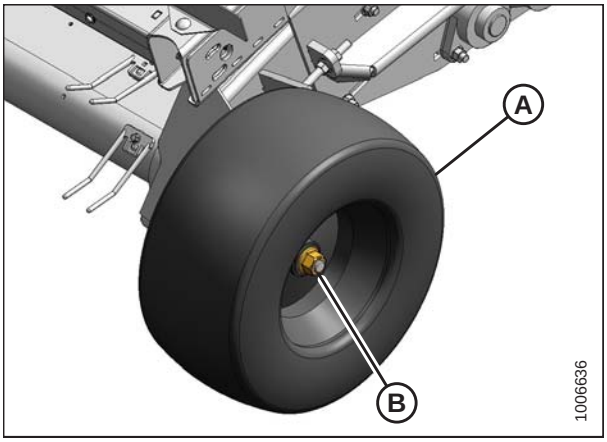

Figure 5.217: Left Side Wheel

5.11.3 Inflating Tire

Maintain correct tire pressure to achieve desired cutting height. Check tire pressure daily.

Table 5.2 Tire (MD #152724)

Tire	Pressure
18.50 x 8.50-8	240–310 kPa (35–45 psi)[1]

1. Use the lower end of this range if operating on rough terrain.

5.12 Lights

The transport lights, located at each end of the header, are used when driving the combine on the road with the header attached.

- Use electrical tape and wire clips to prevent wires from dragging or rubbing.
- Keep lights clean, and replace defective bulbs.
- Replace the light housing if it is cracked or broken.

5.12.1 Adjusting Transport Lights

DANGER

To avoid bodily injury or death from unexpected startup of machine, always stop engine and remove key from ignition before leaving operator's seat for any reason.

1. Lower header to the ground, shut off combine, and remove key from ignition.
2. If repositioning is required, swivel the lights with hand force.
3. If the swivel is too loose or too tight, adjust jam nut (A) and turn nut (B) so the light maintains its position and can be moved with hand force.
4. Tighten jam nut (A). Do **NOT** overtighten.

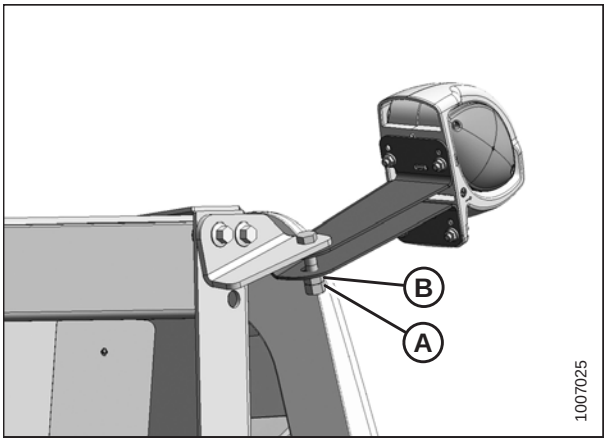

Figure 5.218: Transport Light

5.12.2 Replacing Transport Light Bulb

Transport lights are an important safety feature. Keep lights clean, and replace defective bulbs.

DANGER

To avoid bodily injury or death from unexpected startup of machine, always stop engine and remove key from ignition before leaving operator's seat for any reason.

1. Lower header to the ground, shut off combine, and remove key from ignition.
2. Remove two screws (A) using a Phillips screwdriver.
3. Pry off the lens (B).
4. Push in and slightly turn bulb counterclockwise. Remove the bulb.
5. Place the new bulb in the socket, push in, and turn clockwise until bulb stops.
6. Replace lens (B) and secure with two screws (A).

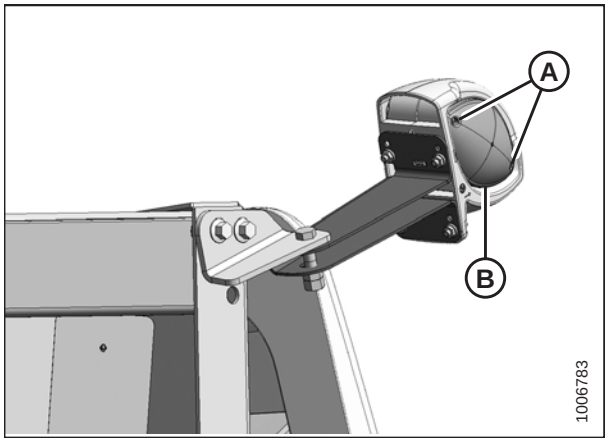

Figure 5.219: Transport Light

5.12.3 Replacing Lens

Transport lights are an important safety feature. Keep lenses clean, and replace if cracked or broken.

DANGER

To avoid bodily injury or death from unexpected startup of machine, always stop engine and remove key from ignition before leaving operator's seat for any reason.

1. Lower header to the ground, shut off combine, and remove key from ignition.
2. Remove two screws (A) using a Phillips screwdriver.
3. Pry off the lens (B).
4. Install new lens (B), and secure with two screws (A).

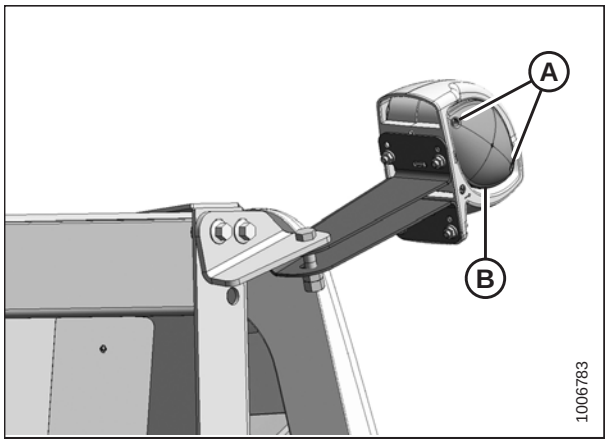

Figure 5.220: Transport Light

5.12.4 Replacing Lamp Housing

Transport lights are an important safety feature. Replace housing if cracked or broken.

DANGER

To avoid bodily injury or death from unexpected startup of machine, always stop engine and remove key from ignition before leaving operator's seat for any reason.

1. Lower header to the ground, shut off combine, and remove key from ignition.
2. Pull wiring harness (A) out of lamp bracket, and locate connectors inside the wiring harness.
3. Disconnect light wiring from harness.
4. Remove four nuts (B), and remove lamp (C) from bracket.
5. Install new lamp (C) on bracket, and secure with four nuts (B).
6. Connect lamp wiring to harness (A), and route wires inside plastic covering. Seal with black tape.
7. Ensure that wiring harness is not damaged, and secure harness inside lamp bracket.
8. Check operation of new lamp.

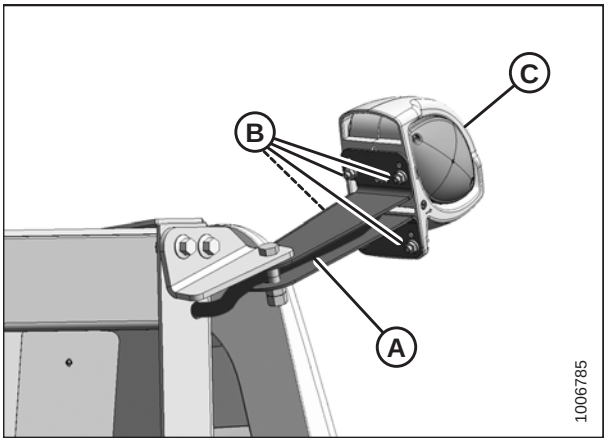

Figure 5.221: Transport Light

Chapter 6: Options and Attachments

6.1 Hold-Down Performance Kit

The Hold-Down Performance kit assists with the delivery of light crop onto the pick-up, especially when the fingers have difficulty picking up the crop and have a tendency to throw the crop forward.

The kit attaches to the hold-down bar and consists of a series of spring wires that rotate or lock by moving the center nut and project forward and downward into the crop.

Attachment hardware and installation instructions are included in the kit.

MD #B5475

Instruction MD #169464

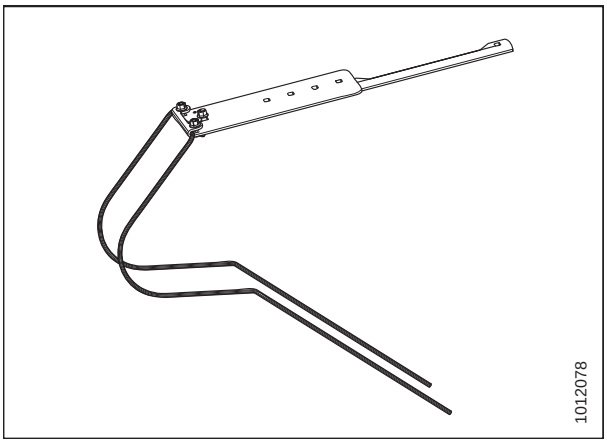

Figure 6.1: Hold-Down Performance Kit

6.2 Seed Saver Performance Kit

The Seed Saver kit can be installed on a MacDon PW8 header. This option is recommended for use with lighter grain crops, such as canola.

Attachment hardware and installation instructions are included in the kit.

MD #B6429

Instruction MD #214570

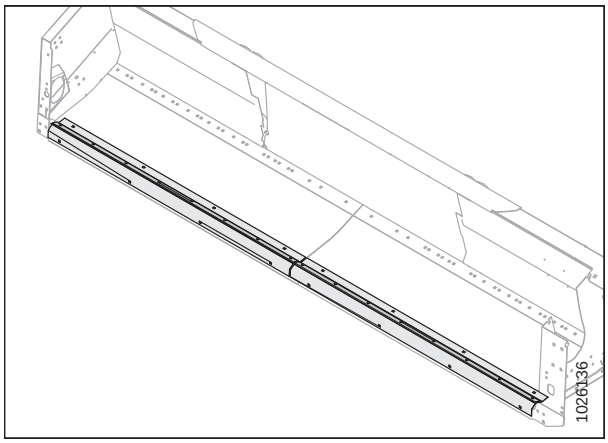

Figure 6.2: Seed Saver Performance Kit

6.3 Combine Completion Package Kits

PW8 Combine Pick-Up Headers are factory configured for particular combine makes, models, and feeder house sizes. If the header is being switched to a different make of combine or is not factory configured for any combine, a Combine Completion Package kit is required.

Combine Completion Package kits provide the necessary parts and hardware to modify headers to accommodate different combine models with various feeder house sizes. Refer to *3.9 Changing Header Opening, page 41* for a detailed list of supported combine models and feeder house sizes.

Attachment hardware and installation instructions are included in the kits.

Combine Make	Bundle #
Case IH 10/20/30/40 Series, Case IH 5/6/7088 Series, and New Holland CR/CX[2]	MD #B6804
John Deere 60/70/S Series[3]	MD #B6805
Versatile	MD #B6806

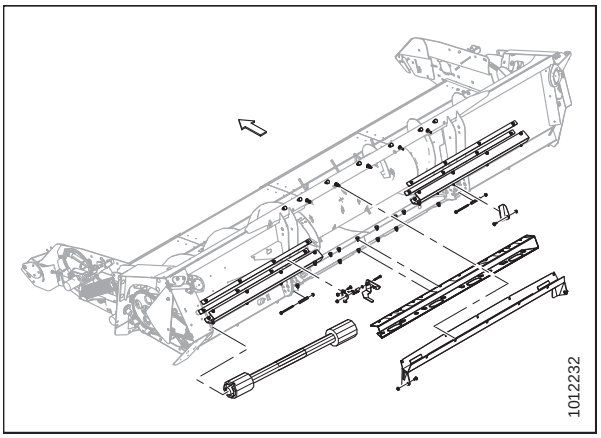

Figure 6.3: Combine Completion Package Kit – Case IH and New Holland

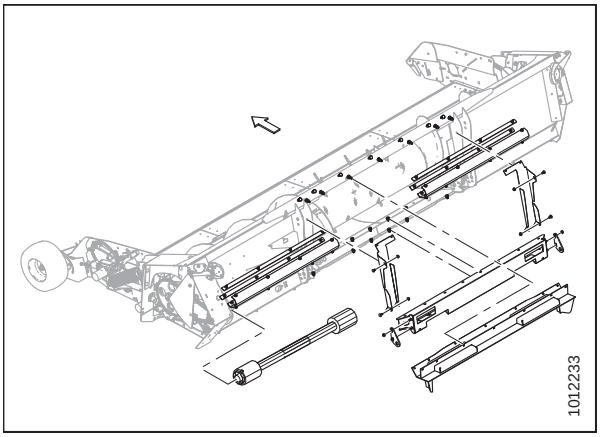

Figure 6.4: Combine Completion Package Kit – John Deere

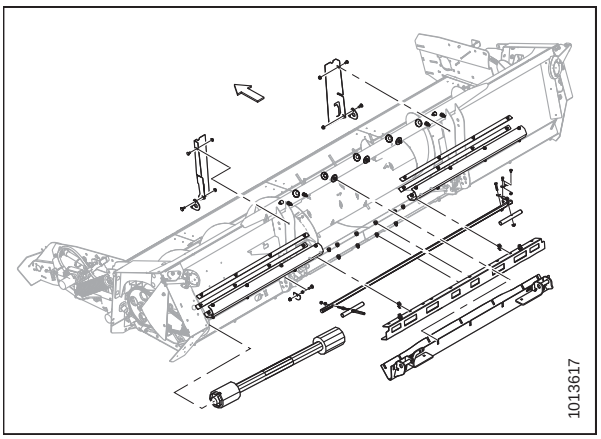

Figure 6.5: Combine Completion Package Kit – Versatile

2. Must purchase either B6361 (6-tooth spline driveline) or B6362 (21-tooth spline driveline).
3. Model does not interface with any JD 50 Series, Maximizer 9600/9610/CTS/II.

6.4 Auger Dent Repair Kit

This kit allows Operators to repair dents close to the finger/guide area that the feed auger may have sustained during regular use.

Attachment hardware and installation instructions are included in the kit.

MD #237563

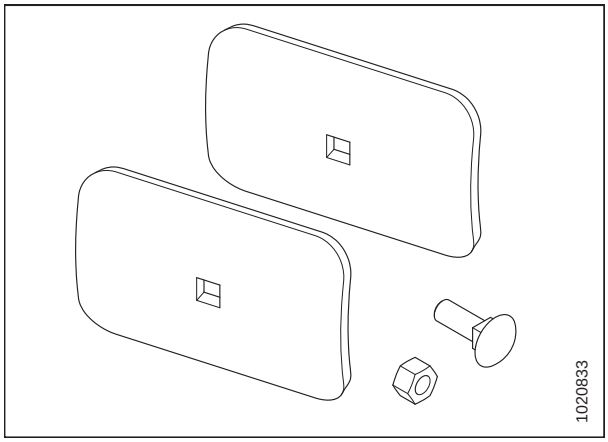

Figure 6.6: Auger Dent Repair Kit

6.5 Pivoting Caster Wheels Kit

The Pivoting Caster Wheel kit will provide better tracking when towing the header.

Attachment hardware and installation instructions are included in the kit.

MD #B6315

Instruction MD #214233

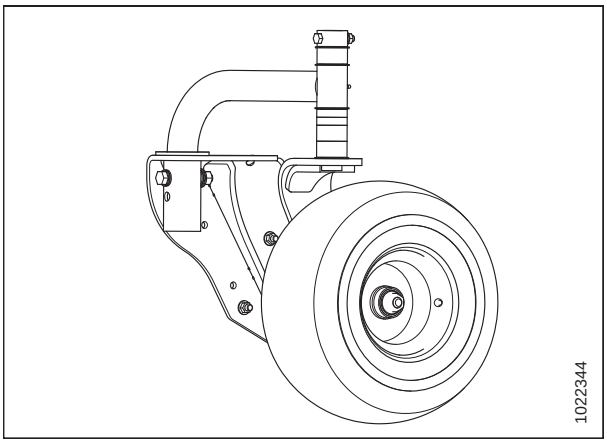

Figure 6.7: Caster Wheel Kit

Chapter 7: Troubleshooting

Problem	Solution	Refer to
Symptom: Material overshoots the table auger		
Draper speed too high	Reduce draper speed until pick-up is just pushing the swath.	*Adjusting Draper Speed, page 71*
Incorrect header height	Measure and adjust header height to 305 mm (12 in.) from the center of the rear draper roller to the ground.	*Header Height, page 78*
Improperly adjusted hold-down rods	Adjust the rod tube so the tips of the rods are close enough to the draper belts to prevent overshoot.	*Adjusting Hold-Down Rod Angle, page 84*
Symptom: Swath forms a ball and rolls to the right or left where it is eventually lost off the end of the pick-up		
Draper speed too high	Reduce draper speed until pick-up is just pushing the swath.	*Adjusting Draper Speed, page 71*
Light crop flowing forward and fingers unable to move swath rearward	Add optional Hold-Down Performance kit MD #B5475.	• See your Dealer • *6.1 Hold-Down Performance Kit, page 263*
Symptom: Shelling in delicate crops		
Draper speed too high	Reduce draper speed until pick-up is just pushing the swath.	*Adjusting Draper Speed, page 71*
Improperly adjusted hold-down	Raise the hold-down assembly high enough to clear the swath.	*Hold-Down Position, page 83*
Symptom: Header leaves material in the field		
Pick-up teeth are set too high	Raise wheels to lower the pick-up height.	*Pick-Up Height, page 79*
Draper speed too low	Increase draper speed.	*Adjusting Draper Speed, page 71*
Pick-up is running too fast (pulling swath apart)	Slow down the pick-up until it is just pushing the swath.	*Adjusting Draper Speed, page 71*
Symptom: Header is picking a large amount of dirt and stones		
Draper speed too high	Reduce draper speed until pick-up is just pushing the swath.	*Adjusting Draper Speed, page 71*
Pick-up height too low	Lower wheels to raise the pick-up height.	*Pick-Up Height, page 79*
Symptom: Material stalls on the header before the auger can pull it into the feeder house		
Rough header pan surface	Polish the header pan with emery cloth or buffing wheel.	—
Incorrect header height	Adjust header height.	*Header Height, page 78*
Incorrect face plate angle	Header face plate can be adjusted on some combine headers. Adjust combine header tilt so when header is at operating height, the header floor pan and ground are parallel. (Note:	Refer to your combine operator's manual.

Problem	Solution	Refer to
	Adjust header tilt to Corn Setting from Grain Setting.)	
Symptom: Draper belts tracking incorrectly		
Incorrect tension	Tension draper belts.	• *Adjusting Front Draper Belt Tension, page 86* • *Adjusting Rear Draper Belt Tension, page 88*
Dirt/crop buildup on rollers	Remove draper belts and remove dirt/crop buildup from roller surface and roller groove.	*5.7.1 Draper Belts, page 204*
Belts are sometimes tacky when new	Apply talcum or baby powder onto belts to reduce tackiness. Belts may also need to be run loose for the first few hours of break-in.	—
Symptom: Belts stalling when loaded with crop material		
Draper belts are too loose	Increase belt tension.	• *Adjusting Front Draper Belt Tension, page 86* • *Adjusting Rear Draper Belt Tension, page 88*
Symptom: Hold-down slave cylinder lags behind master on lift		
Air in system	Bleed cylinders.	*5.9.4 Bleeding Cylinders and Lines, page 246*
Symptom: Hold-down master cylinder lags behind slave on descent and ahead of slave on lift		
Obstruction preventing cylinder movement	Check lift cylinder and lift arm attachments.	—
Air in system	Bleed cylinders.	*5.9.4 Bleeding Cylinders and Lines, page 246*
Flow is too restricted	Check hoses and lines.	*5.9.5 Hydraulic Hoses and Lines, page 247*
Symptom: Slave cylinder remains extended more than 13 mm (1/2 in.) when hold-down is fully lowered		
Air in system	Bleed cylinders.	*5.9.4 Bleeding Cylinders and Lines, page 246*
Symptom: Hold-down remains raised and will not lower		
Safety prop is engaged	Disengage safety prop.	*3.5 Engaging Hold-Down Lift Cylinder Safety Props, page 37*
Hydraulics not connected properly	Ensure hydraulic lines are connected properly and not damaged.	*5.9.5 Hydraulic Hoses and Lines, page 247*
Symptom: Driveline clutch is slipping		
Clutch is worn	Replace clutch.	*Replacing Driveline Clutch, page 169*
Obstruction in auger	Shut off combine, remove key, and remove obstruction.	*3.13 Unplugging the Header, page 91*

Problem	Solution	Refer to
Symptom: Pick-up wheels bounce over bumps		
Header height is too high	Lower header until rear pick-up roller is 305 mm (12 in.) above the ground.	• *Header Height, page 78* • *3.12.4 Adjusting Header Float, page 81*

Chapter 8: Reference

8.1 Torque Specifications

The following tables provide correct torque values for various bolts, cap screws, and hydraulic fittings.

- Tighten all bolts to torque values specified in charts (unless otherwise noted throughout this manual).
- Replace hardware with same strength and grade of bolt.
- Use torque value tables as a guide and periodically check tightness of bolts.
- Understand torque categories for bolts and cap screws by using their identifying head markings.

Jam nuts

When applying torque to finished jam nuts, multiply the torque applied to regular nuts by f=0.65.

Self-tapping screws

Standard torque is to be used (**NOT** to be used on critical or structurally important joints).

8.1.1 Metric Bolt Specifications

Table 8.1 Metric Class 8.8 Bolts and Class 9 Free Spinning Nut

Nominal Size (A)	Torque (Nm)		Torque (lbf·ft) (*lbf·in)	
	Min.	Max.	Min.	Max.
3-0.5	1.4	1.6	*13	*14
3.5-0.6	2.2	2.5	*20	*22
4-0.7	3.3	3.7	*29	*32
5-0.8	6.7	7.4	*59	*66
6-1.0	11.4	12.6	*101	*112
8-1.25	28	30	20	23
10-1.5	55	60	40	45
12-1.75	95	105	70	78
14-2.0	152	168	113	124
16-2.0	236	261	175	193
20-2.5	460	509	341	377
24-3.0	796	879	589	651

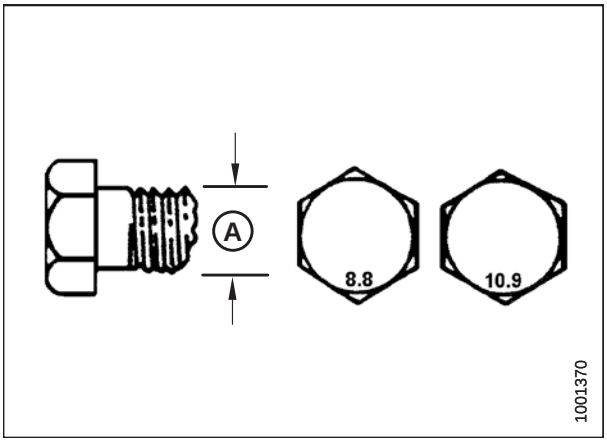

Figure 8.1: Bolt Grades

Table 8.2 Metric Class 8.8 Bolts and Class 9 Distorted Thread Nut

Nominal Size (A)	Torque (Nm)		Torque (lbf·ft) (*lbf·in)	
	Min.	Max.	Min.	Max.
3-0.5	1	1.1	*9	*10
3.5-0.6	1.5	1.7	*14	*15
4-0.7	2.3	2.5	*20	*22
5-0.8	4.5	5	*40	*45
6-1.0	7.7	8.6	*69	*76
8-1.25	18.8	20.8	*167	*185
10-1.5	37	41	28	30
12-1.75	65	72	48	53
14-2.0	104	115	77	85
16-2.0	161	178	119	132
20-2.5	314	347	233	257
24-3.0	543	600	402	444

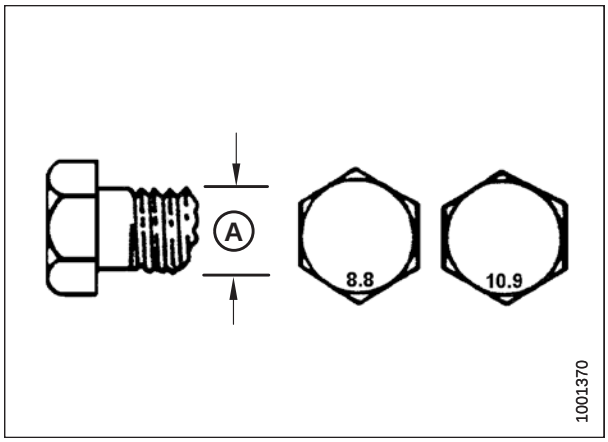

Figure 8.2: Bolt Grades

Table 8.3 Metric Class 10.9 Bolts and Class 10 Free Spinning Nut

Nominal Size (A)	Torque (Nm)		Torque (lbf·ft) (*lbf·in)	
	Min.	Max.	Min.	Max.
3-0.5	1.8	2	*18	*19
3.5-0.6	2.8	3.1	*27	*30
4-0.7	4.2	4.6	*41	*45
5-0.8	8.4	9.3	*82	*91
6-1.0	14.3	15.8	*140	*154
8-1.25	38	42	28	31
10-1.5	75	83	56	62
12-1.75	132	145	97	108
14-2.0	210	232	156	172
16-2.0	326	360	242	267
20-2.5	637	704	472	521
24-3.0	1101	1217	815	901

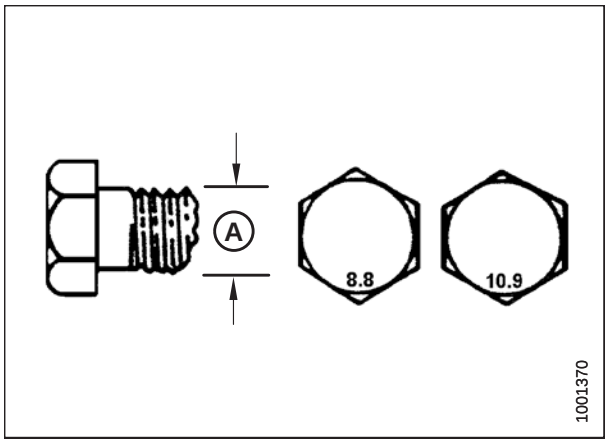

Figure 8.3: Bolt Grades

Table 8.4 Metric Class 10.9 Bolts and Class 10 Distorted Thread Nut

Nominal Size (A)	Torque (Nm)		Torque (lbf·ft) (*lbf·in)	
	Min.	Max.	Min.	Max.
3-0.5	1.3	1.5	*12	*13
3.5-0.6	2.1	2.3	*19	*21
4-0.7	3.1	3.4	*28	*31
5-0.8	6.3	7	*56	*62
6-1.0	10.7	11.8	*95	*105
8-1.25	26	29	19	21
10-1.5	51	57	38	42
12-1.75	90	99	66	73
14-2.0	143	158	106	117
16-2.0	222	246	165	182
20-2.5	434	480	322	356
24-3.0	750	829	556	614

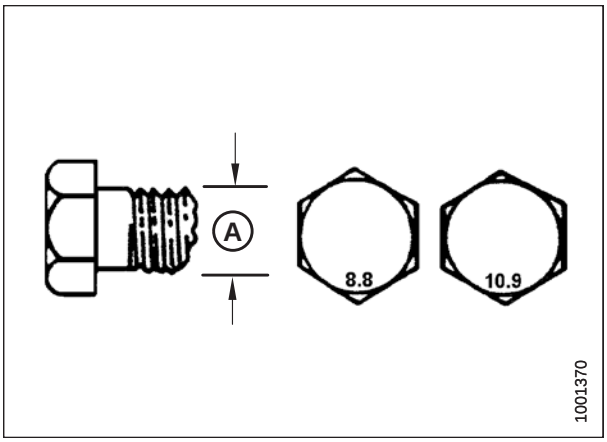

Figure 8.4: Bolt Grades

8.1.2 Metric Bolt Specifications Bolting into Cast Aluminum

Table 8.5 Metric Bolt Bolting into Cast Aluminum

Nominal Size (A)	Bolt Torque			
	8.8 (Cast Aluminum)		10.9 (Cast Aluminum)	
	Nm	lbf·ft	Nm	lbf·ft
M3	–	–	–	1
M4	–	–	4	2.6
M5	–	–	8	5.5
M6	9	6	12	9
M8	20	14	28	20
M10	40	28	55	40
M12	70	52	100	73
M14	–	–	–	–
M16	–	–	–	–

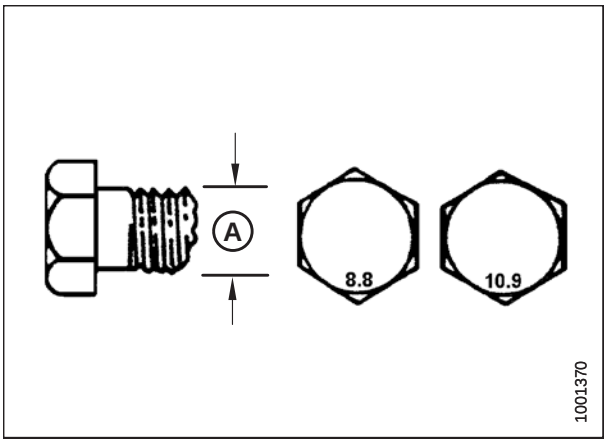

Figure 8.5: Bolt Grades

8.1.3 Flare-Type Hydraulic Fittings

1. Check flare (A) and flare seat (B) for defects that might cause leakage.
2. Align tube (C) with fitting (D) and thread nut (E) onto fitting without lubrication until contact has been made between flared surfaces.
3. Torque fitting nut (E) to specified number of flats from finger tight (FFFT) or to a given torque value in Table *8.6, page 276*.
4. Use two wrenches to prevent fitting (D) from rotating. Place one wrench on fitting body (D), and tighten nut (E) with other wrench to torque shown.
5. Assess final condition of connection.

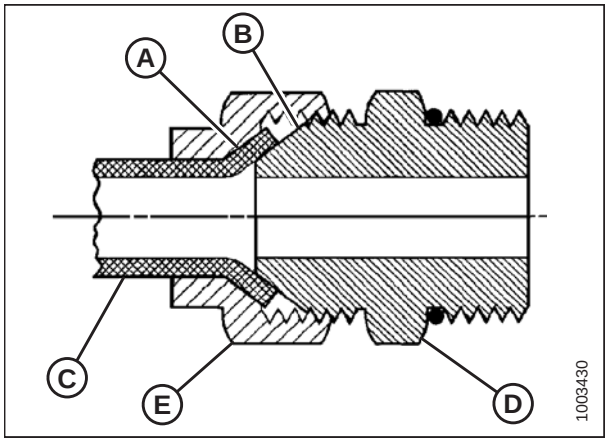

Figure 8.6: Hydraulic Fitting

Table 8.6 Flare-Type Hydraulic Tube Fittings

SAE Dash Size	Thread Size (in.)	Torque Value[4]		Flats from Finger Tight (FFFT)	
		Nm	lbf·ft	Tube	Swivel Nut or Hose
-2	5/16–24	4–5	3–4	—	—
-3	3/8–24	7–8	5–6	—	—
-4	7/16–20	18–19	13–14	2 1/2	2
-5	1/2–20	19–21	14–15	2	2
-6	9/16–18	30–33	22–24	2	1 1/2
-8	3/4–16	57–63	42–46	2	1 1/2
-10	7/8–14	81–89	60–66	1 1/2	1 1/2
-12	1 1/16–12	113–124	83–91	1 1/2	1 1/4
-14	1 3/16–12	136–149	100–110	1 1/2	1 1/4
-16	1 5/16–12	160–176	118–130	1 1/2	1
-20	1 5/8–12	228–250	168–184	1	1
-24	1 7/8–12	264–291	195–215	1	1
-32	2 1/2–12	359–395	265–291	1	1
-40	3–12	—	—	1	1

4. Torque values shown are based on lubricated connections as in reassembly.

8.1.4 O-Ring Boss Hydraulic Fittings – Adjustable

1. Inspect O-ring (A) and seat (B) for dirt or obvious defects.
2. Back off lock nut (C) as far as possible. Ensure that washer (D) is loose and is pushed toward lock nut (C) as far as possible.
3. Check that O-ring (A) is **NOT** on threads and adjust if necessary.
4. Apply hydraulic system oil to O-ring (A).

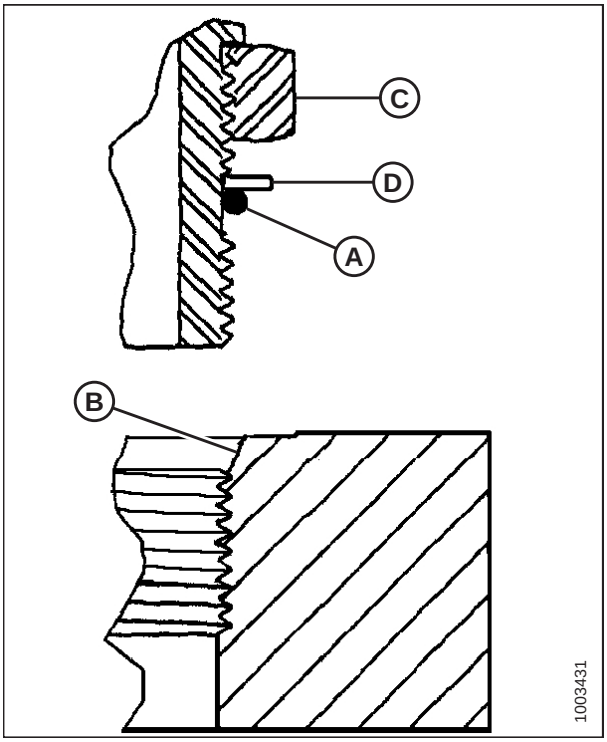

Figure 8.7: Hydraulic Fitting

5. Install fitting (B) into port until backup washer (D) and O-ring (A) contact part face (E).
6. Position angle fittings by unscrewing no more than one turn.
7. Turn lock nut (C) down to washer (D) and tighten to torque shown. Use two wrenches, one on fitting (B) and other on lock nut (C).
8. Check final condition of fitting.

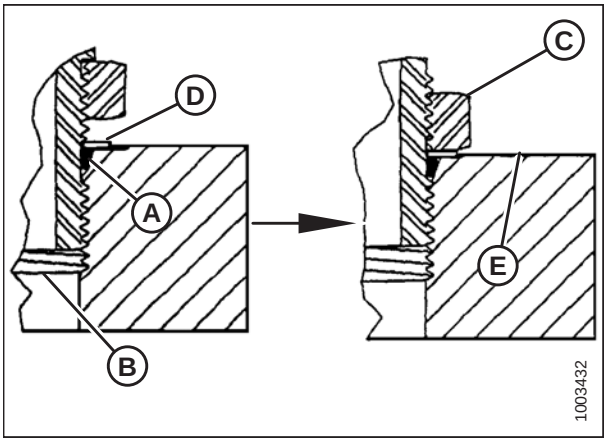

Figure 8.8: Hydraulic Fitting

Table 8.7 O-Ring Boss (ORB) Hydraulic Fittings – Adjustable

SAE Dash Size	Thread Size (in.)	Torque Value[5]	
		Nm	lbf·ft (*lbf·in)
-2	5/16–24	6–7	*53–62
-3	3/8–24	12–13	*106–115
-4	7/16–20	19–21	14–15
-5	1/2–20	21–33	15–24
-6	9/16–18	26–29	19–21
-8	3/4–16	46–50	34–37
-10	7/8–14	75–82	55–60
-12	1 1/16–12	120–132	88–97
-14	1 3/8–12	153–168	113–124
-16	1 5/16–12	176–193	130–142
-20	1 5/8–12	221–243	163–179
-24	1 7/8–12	270–298	199–220
-32	2 1/2–12	332–365	245–269

5. Torque values shown are based on lubricated connections as in reassembly.

8.1.5 O-Ring Boss Hydraulic Fittings – Non-Adjustable

1. Inspect O-ring (A) and seat (B) for dirt or obvious defects.
2. Check that O-ring (A) is **NOT** on threads and adjust if necessary.
3. Apply hydraulic system oil to O-ring.
4. Install fitting (C) into port until fitting is hand-tight.
5. Torque fitting (C) according to values in Table *8.8, page 279*.
6. Check final condition of fitting.

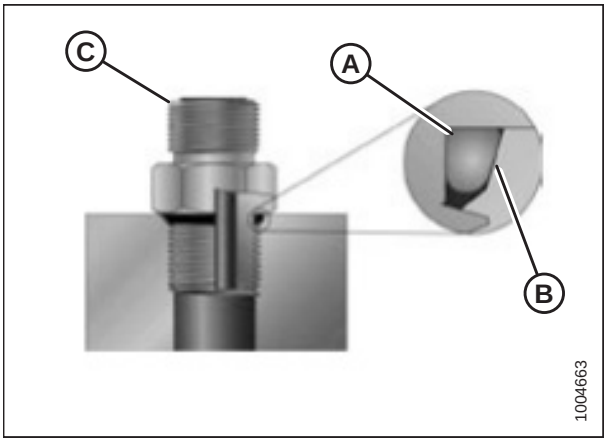

Figure 8.9: Hydraulic Fitting

Table 8.8 O-Ring Boss (ORB) Hydraulic Fittings – Non-Adjustable

SAE Dash Size	Thread Size (in.)	Torque Value[6]	
		Nm	lbf·ft (*lbf·in)
-2	5/16–24	6–7	*53–62
-3	3/8–24	12–13	*106–115
-4	7/16–20	19–21	14–15
-5	1/2–20	21–33	15–24
-6	9/16–18	26–29	19–21
-8	3/4–16	46–50	34–37
-10	7/8–14	75–82	55–60
-12	1 1/16–12	120–132	88–97
-14	1 3/8–12	153–168	113–124
-16	1 5/16–12	176–193	130–142
-20	1 5/8–12	221–243	163–179
-24	1 7/8–12	270–298	199–220
-32	2 1/2–12	332–365	245–269

6. Torque values shown are based on lubricated connections as in reassembly.

8.1.6 O-Ring Face Seal Hydraulic Fittings

1. Check components to ensure that sealing surfaces and fitting threads are free of burrs, nicks, scratches, or any foreign material.

Figure 8.10: Hydraulic Fitting

2. Apply hydraulic system oil to O-ring (B).
3. Align tube or hose assembly so that flat face of sleeve (A) or (C) comes in full contact with O-ring (B).
4. Thread tube or hose nut (D) until hand-tight. The nut should turn freely until it is bottomed out.
5. Torque fittings according to values in Table *8.9, page 280*.

   NOTE:

   If applicable, hold hex on fitting body (E) to prevent rotation of fitting body and hose when tightening fitting nut (D).

6. Use three wrenches when assembling unions or joining two hoses together.
7. Check final condition of fitting.

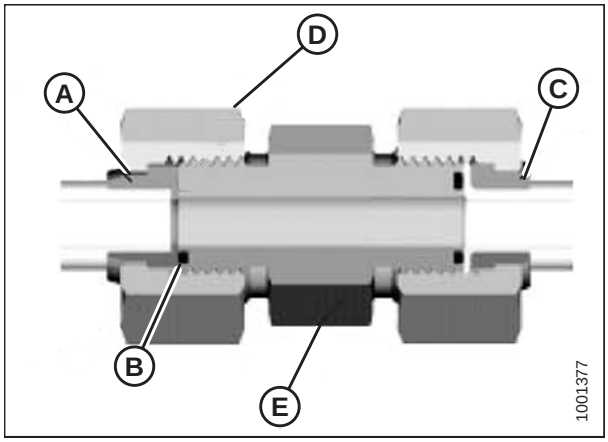

Figure 8.11: Hydraulic Fitting

Table 8.9 O-Ring Face Seal (ORFS) Hydraulic Fittings

SAE Dash Size	Thread Size (in.)	Tube O.D. (in.)	Torque Value[7]	
			Nm	lbf·ft
-3	Note[8]	3/16	–	–
-4	9/16	1/4	25–28	18–21
-5	Note[8]	5/16	–	–
-6	11/16	3/8	40–44	29–32
-8	13/16	1/2	55–61	41–45
-10	1	5/8	80–88	59–65
-12	1 3/16	3/4	115–127	85–94
-14	Note[8]	7/8	–	–

7. Torque values and angles shown are based on lubricated connection as in reassembly.
8. O-ring face seal type end not defined for this tube size.

Table 8.9 O-Ring Face Seal (ORFS) Hydraulic Fittings (continued)

SAE Dash Size	Thread Size (in.)	Tube O.D. (in.)	Torque Value[9]	
			Nm	lbf·ft
-16	1 7/16	1	150–165	111–122
-20	1 11/16	1 1/4	205–226	151–167
-24	1–2	1 1/2	315–347	232–256
-32	2 1/2	2	510–561	376–414

8.1.7 Tapered Pipe Thread Fittings

Assemble pipe fittings as follows:

1. Check components to ensure that fitting and port threads are free of burrs, nicks, scratches, or any form of contamination.
2. Apply pipe thread sealant (paste type) to external pipe threads.
3. Thread fitting into port until hand-tight.
4. Torque connector to appropriate torque angle. The turns from finger tight (TFFT) and flats from finger tight (FFFT) values are shown in Table *8.10, page 281*. Make sure that tube end of a shaped connector (typically 45 degree or 90 degree) is aligned to receive incoming tube or hose assembly. Always finish alignment of fitting in tightening direction. Never back off (loosen) pipe threaded connectors to achieve alignment.
5. Clean all residue and any excess thread conditioner with appropriate cleaner.
6. Assess final condition of fitting. Pay special attention to possibility of cracks to port opening.
7. Mark final position of fitting. If a fitting leaks, disassemble fitting and check for damage.

   NOTE:

   Overtorque failure of fittings may not be evident until fittings are disassembled.

Table 8.10 Hydraulic Fitting Pipe Thread

Tapered Pipe Thread Size	Recommended TFFT	Recommended FFFT
1/8–27	2–3	12–18
1/4–18	2–3	12–18
3/8–18	2–3	12–18
1/2–14	2–3	12–18
3/4–14	1.5–2.5	12–18
1–11 1/2	1.5–2.5	9–15
1 1/4–11 1/2	1.5–2.5	9–15
1 1/2–11 1/2	1.5–2.5	9–15
2–11 1/2	1.5–2.5	9–15

9. Torque values and angles shown are based on lubricated connection as in reassembly.

8.2 Conversion Chart

Table 8.11 Conversion Chart

Quantity	SI Units (Metric)		Factor	US Customary Units (Standard)	
	Unit Name	Abbreviation		Unit Name	Abbreviation
Area	hectare	ha	x 2.4710 =	acre	acres
Flow	liters per minute	L/min	x 0.2642 =	US gallons per minute	gpm
Force	Newton	N	x 0.2248 =	pound force	lbf
Length	millimeter	mm	x 0.0394 =	inch	in.
Length	meter	m	x 3.2808 =	foot	ft.
Power	kilowatt	kW	x 1.341 =	horsepower	hp
Pressure	kilopascal	kPa	x 0.145 =	pounds per square inch	psi
Pressure	megapascal	MPa	x 145.038 =	pounds per square inch	psi
Pressure	bar (Non-SI)	bar	x 14.5038 =	pounds per square inch	psi
Torque	Newton meter	Nm	x 0.7376 =	pound feet or foot pounds	lbf·ft
Torque	Newton meter	Nm	x 8.8507 =	pound inches or inch pounds	lbf·in
Temperature	degrees Celsius	°C	(°C x 1.8) + 32 =	degrees Fahrenheit	°F
Velocity	meters per minute	m/min	x 3.2808 =	feet per minute	ft/min
Velocity	meters per second	m/s	x 3.2808 =	feet per second	ft/s
Velocity	kilometers per hour	km/h	x 0.6214 =	miles per hour	mph
Volume	liter	L	x 0.2642 =	US gallon	US gal
Volume	milliliter	mL	x 0.0338 =	ounce	oz.
Volume	cubic centimeter	cm^3 or cc	x 0.061 =	cubic inch	$in.^3$
Weight	kilogram	kg	x 2.2046 =	pound	lb.

Index

A

B

C

D

E

F

G

H

J

L

M

N

O

P

R

S

T

U

V

W

Recommended Fluids and Lubricants

Keep your machine operating at top efficiency by using only clean lubricants and by ensuring the following:

- Use clean containers to handle all lubricants.
- Store lubricants in an area protected from dust, moisture, and other contaminants.

Lubricant	Specification	Description	Use
Grease	SAE multi-purpose	High temperature extreme pressure (EP2) performance with 1% max molybdenum disulphide (NLGI Grade 2) lithium base	As required, unless otherwise specified
		Extreme pressure (EP) performance with 1.5–5% molybdenum disulphide (NLGI Grade 2) lithium base	Drive motor shaft
Oil	SAE 30	—	Auger drive chain

MacDon

MacDon Industries Ltd.
680 Moray Street
Winnipeg, Manitoba
Canada R3J 3S3
t. (204) 885-5590 f. (204) 832-7749

MacDon, Inc.
10708 N. Pomona Avenue
Kansas City, Missouri
United States 64153-1924
t. (816) 891-7313 f. (816) 891-7323

MacDon Australia Pty. Ltd.
A.C.N. 079 393 721
P.O. Box 103 Somerton, Victoria, Australia
Australia 3061
t.+61 3 8301 1911 f.+61 3 8301 1912

MacDon Brasil Agribusiness Ltda.
Rua Grã Nicco, 113, sala 404, B. 04
Mossunguê, Curitiba, Paraná
CEP 81200-200 Brasil
t. +55 (41) 2101-1713 f. +55 (41) 2101-1699

LLC MacDon Russia Ltd.
123317 Moscow, Russia
10 Presnenskaya nab, Block C
Floor 5, Office No. 534, Regus Business Centre
t. +7 495 775 6971 f. +7 495 967 7600

MacDon Europe GmbH
Hagenauer Strasse 59
65203 Wiesbaden
Germany

CUSTOMERS
MacDon.com

DEALERS
Portal.MacDon.com

Printed in Canada